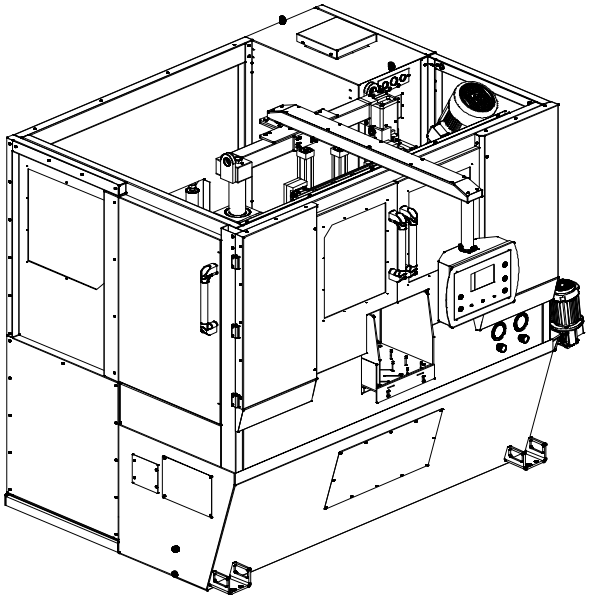

USE AND MAINTENANCE MANUAL

EN

H–320A

YEAR OF MANUFACTURE: _____

”CE” CONFORMITY DECLARATION
(according to EEC MACHINES DIRECTIVE 2006/42/CE annex II A)

The manufacturer:

MEP S.p.A.
Via Enzo Magnani, 1
61045 Pergola (PU) ITALIA
Tel. 072173721–Fax 0721734533

Hereby declares that the bandsawing machine:

Machine Type:	**SAWING MACHINE**
Machine model:	**H–320A**
Serial number:	
Year of manufacture:	

is in specification with the following directives:

- **EEC MACHINES DIRECTIVE 2006/42/CE**
  - **EN 16093:2017**
- **DIRECTIVE 2014/30/UE ”EMC”**
  - **EN 50370–1:2005 Emission**
  - **EN 50370–2:2003 Immunity**

Responsible of a Technical File
(Walter Di Giovanni)

c/o MEP SPA
Via Enzo Magnani, 1
61045 – Pergola – PU – ITALY

Managing Director
(William Giacometti)

Pergola, lì _____

Introduction and technical specifications

1

Foreword

For decades we have been committed to construction of the very best in metal cutting saws. With all our experience, technological know how for the latest in product and design, MEP SpA is able to offer customers specific solutions to all cutting needs and requirements.
In response to modern production technologies **HYDMECH** has developed this new band saw. **H–320A**.
This work tool has been designed as a simple and reliable answer to the wide range of cutting needs of the modern workshop.
Sturdy structure, silent and safe operation it can cut with minimal waste and is extremely versatile, ideal for cutting stainless steel, light alloys, aluminium, copper and bronze offering exceptional speed and precision.
Its high cutting capacity enables it to handle both single workpieces and bundles, making this machine the ideal solution for satisfying the wide range of cutting needs of machine shops, turneries, structural steel shops and engineering workshops.
Congratulations for having chosen this product which, **by following the instructions contained in this user and maintenance handbook** will guarantee years of dependable service.

Warning This band saw has been exclusively designed to cut metals.

Machine presentation

La **H–320A** is a hydraulic electro–mechanical cutting saw for solid and section cutting of metals. Machine operation is either SEMIAUTOMATIC or AUTOMATIC.
In the Semiautomatic cycle, after setting the bow cutting sequence from the control panel and the speed of the descent cutting head, the operator closes the vice by pushing the button from the control panel and pushes the start key to start up the belt. Then:

1. The cutter vice closes 	2. The head lowers until the cut is made (FC-TA) 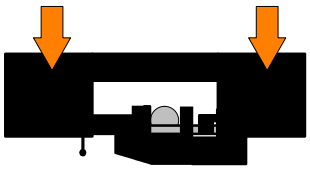	3. The head returns to start position (FCTI) 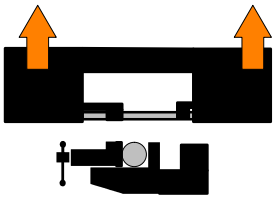	4. The cutter vice opens 

In the Automatic cycle, after setting the bow cutting sequence from the control panel and the speed of the descent cutting head, the operator closes the vice by pushing the key from the control panel and pushes the start key to start the belt. Then:

1. The cutter vice closes 	2. The head lowers until the cut is made (FC-TA) 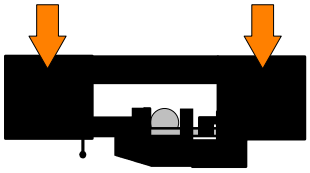	3. The head returns to start position (FCTI) 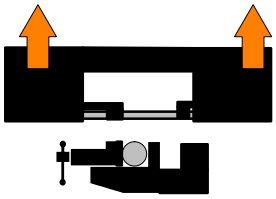	4. The feed vice closes 
5. The cutting vice opens 	6. The cutting material is fed 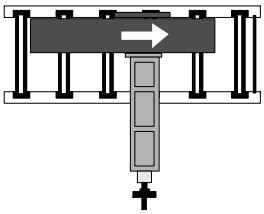	7. The cutting vice closes 	8. The feeder vice opens and the cutting cycle starts again 

Attention Before starting any of the work cycles, consult Chapter 5, where all the work phases are explained in detail.

Machine specification

The anodised aluminium name plate is riveted on the side of the machine; the same data are reproduced on the declaration of conformity included with this use and maintenance manual.

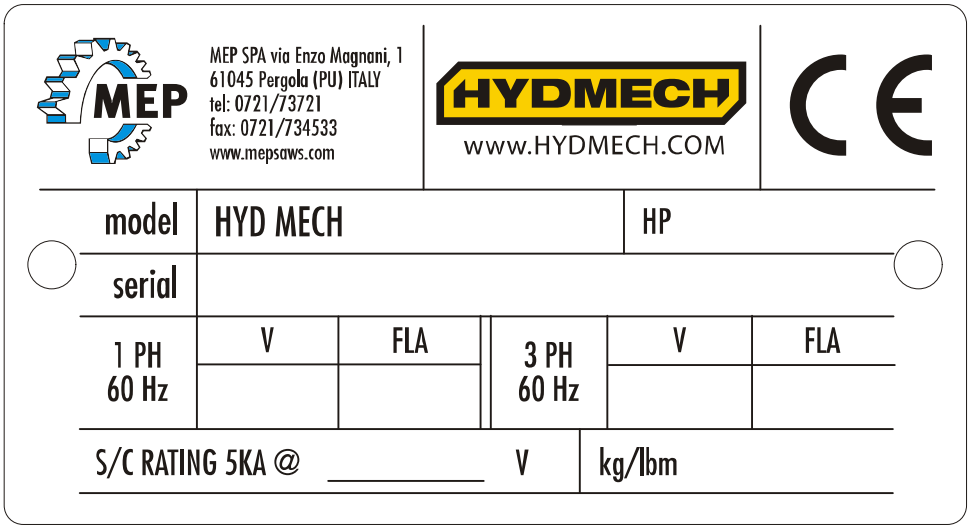

N.B. When communicating with the Technical Service department, the model, serial number and year of manufacture of the machine must be quoted.

Technical data general table

CUTTING SPEEDS		
Blade rotation speed (standard)	mt/min	15÷115
Blade rotation speed (optional)	mt/min	15÷200

BAND SAW		
Nominal dimensions	mm	4640 x 34 x 1,1
Development	mm	4640 ± 40
Blade height	mm	34
Blade thickness	mm	1,1
Blade tension	kg	1600

Attention When choosing the cutting tool, if its dimensions do not correspond to those included in the ”Rated size” section, check that the dimensions at least fall within the admissible max/min specifications.

RATED ELECTRICAL POWER		
Head spindle motor (standard)	kW	4,0
Head spindle motor (optional)	kW	5,5
Electric coolant pump motor	kW	0,18 x 2
Power pack motor M1	kW	1,1
Feed step motor and blade guide head.	kW	0,44
Auxiliaries	kW	0,24

RATED ELECTRICAL POWER		
Chip ejector motor	kW	0,37
Blade tensioning motor	kW	0,25
Max. installed electrical power	kW	8,26

WORKING PRESSURE		
Head working pressure during descent/ascent	bar	18/40
Vice working pressure during opening/closure phase	bar	25
Hydraulic control unit working pressure	bar	40
Working pressure of the hydraulic vertical vices (optional)	bar	25

LUBRICANT/COOLANT FLUID AND OIL		
Oil for monobloc hydraulic power pack	capacità lt	70
Lubricant/coolant fluid (5−6% oil concentration)	capacità lt	200

CUTTING AND FEED VICES		
Vice max. opening	mm	355

SPINDLE MOTOR SPECIFICATIONS				
No.of poles	**Current (Volts)**	**Absorption (Amps)**	**Power (kW)**	**rpm**
4	400	9	4	1430
Stator wound with enamelled copper wire, class H 200° C.				
Class F insulation (limit temperature TL 155°C).				
IP 55 protection rating (total against contact with live parts, water sprayed from all directions, with shaft oil seal).				
Conforming to CEI−EN 60034−1:2011				

HYDRAULIC POWER PACK MOTOR SPECIFICATIONS M1 4−pole, three−phase, asynchronous; Frequency 50 Hz.				
No.of poles	**Current (Volts)**	**Absorption (Amps)**	**Power (kW)**	**rpm**
4	400	2,7	1,1	1390
Protection rating IP 55.				
Conforming to CEI−EN 60034−1:2011				

ELECTROPUMP MOTOR Three−phase; Frequency 50 Hz.					
Voltage (Volts)	**Absorption (Amps)**	**Power (kW)**	**rpm**	**Delivery rate lt/min**	**Head (mt.)**
400	0,45	0,18	2800	85/3	0/6
Protection rating IP 55.					
Conforming to CEI−EN 60034−1:2011					

SPECIFICATIONS ENGINE CHIP CONVEYOR 4−pole, three−phase, asynchronous; frequency 50 Hz.				
Nr. of poles	**Voltage (Volts)**	**Absorption (Amps.)**	**Power (kW)**	**RPM**
4	230/400	2/1,15	0,37	1.400
Class F insulation (limit temperature TL 155°C).				
Conforming to CEI−EN 60034−1:2011				

CUTTING CAPACITY		
Section	●	■
0°	350	350

PACKED WEIGHT		
Wooden cage and pallet	Kg	300
Wooden pallet	Kg	150

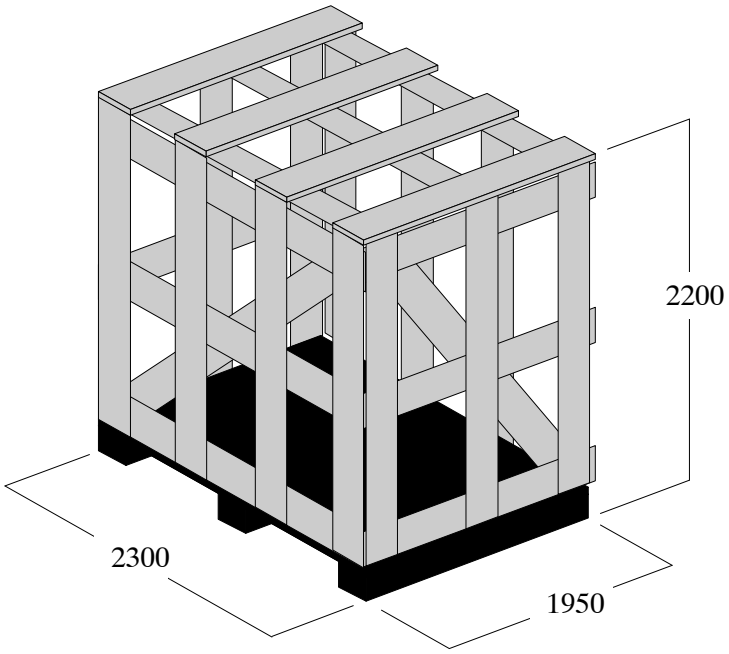

Dimensions

MACHINE INSTALLED		
Work table height	mm	860
Weight	Kg	2800

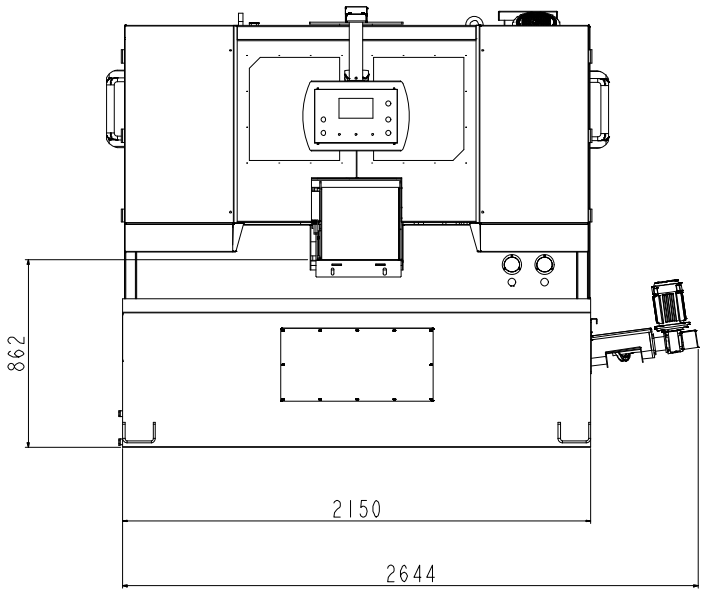

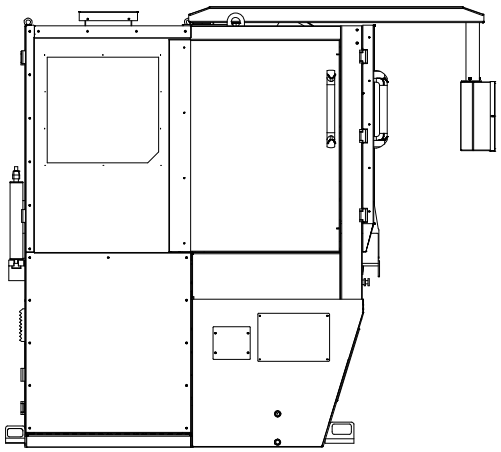

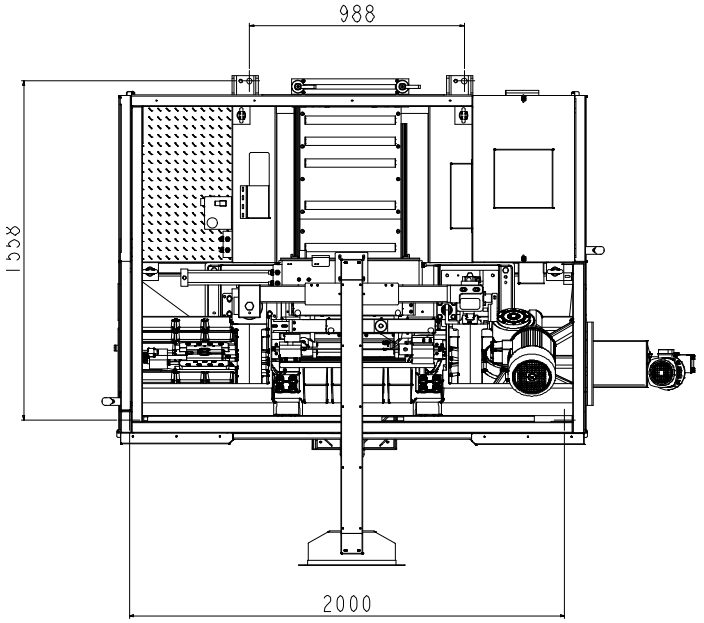

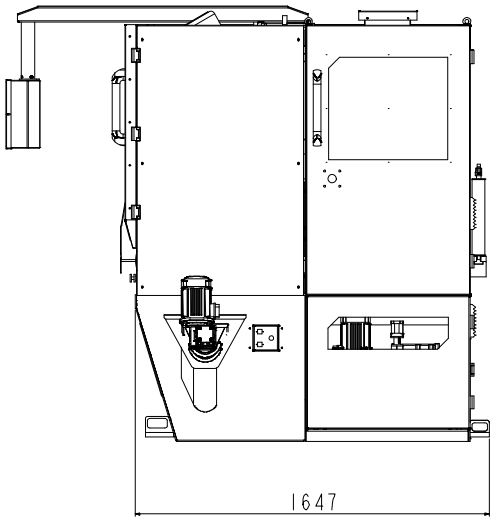

Functional parts

2

H–320A model

In order for the user to move towards a full understanding of how the machine works, which is described in detail in the chapter 5, this chapter deals with the main units and their locations.

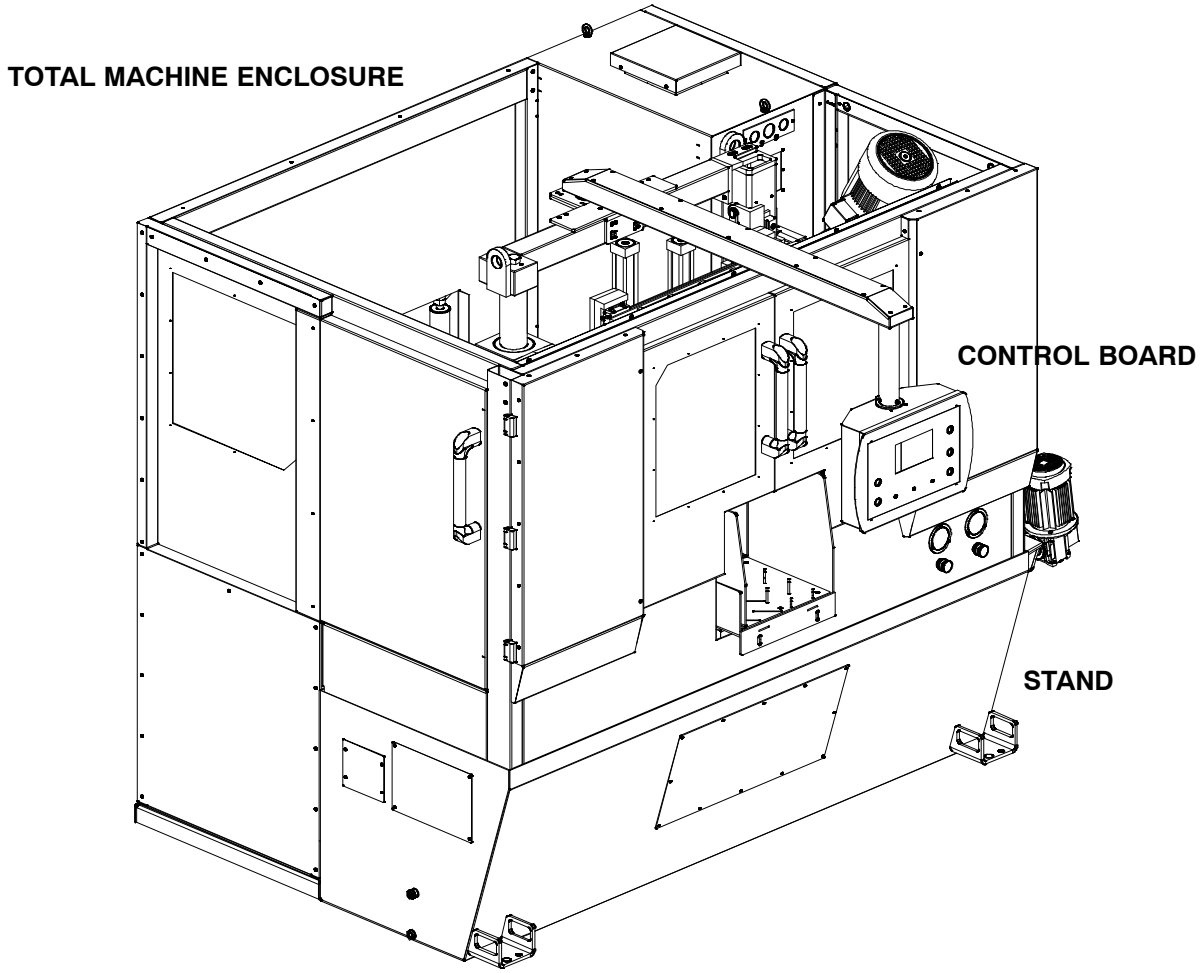

Cutting head

The operating head is the cutting component and is made up of a bow from cast iron on which the following elements are installed: band, band guide components, band tensioning unit, worm screw reducer and spindle motor.
The cutting bow slides on linear guides, with ball recirculation slides, installed on columns for getting a better cutting stability and longer blade life. Feeding is by a stepper motor and screw/nut with recirculating balls.
The machine is equipped with a laser system to position the bar accurately to carry out non−standard or facing cuts.

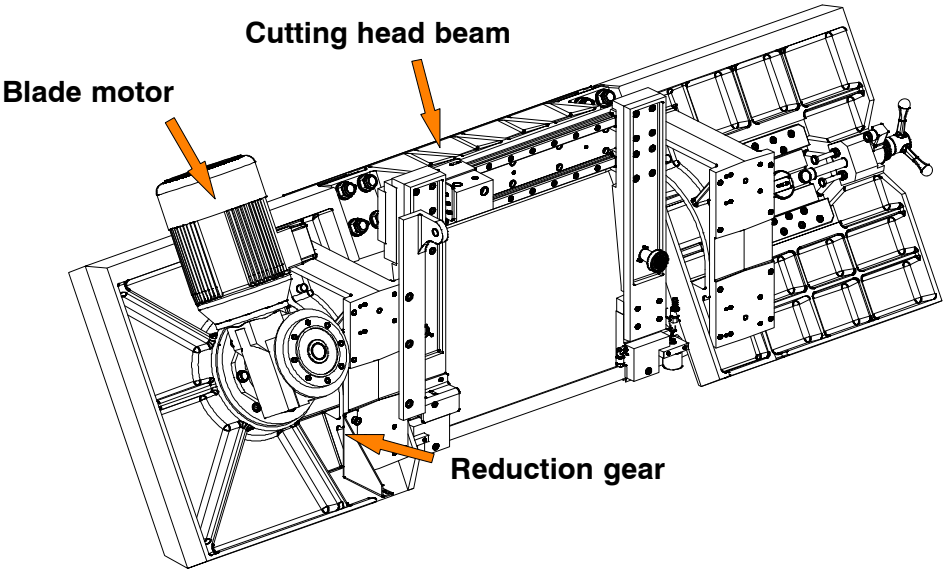

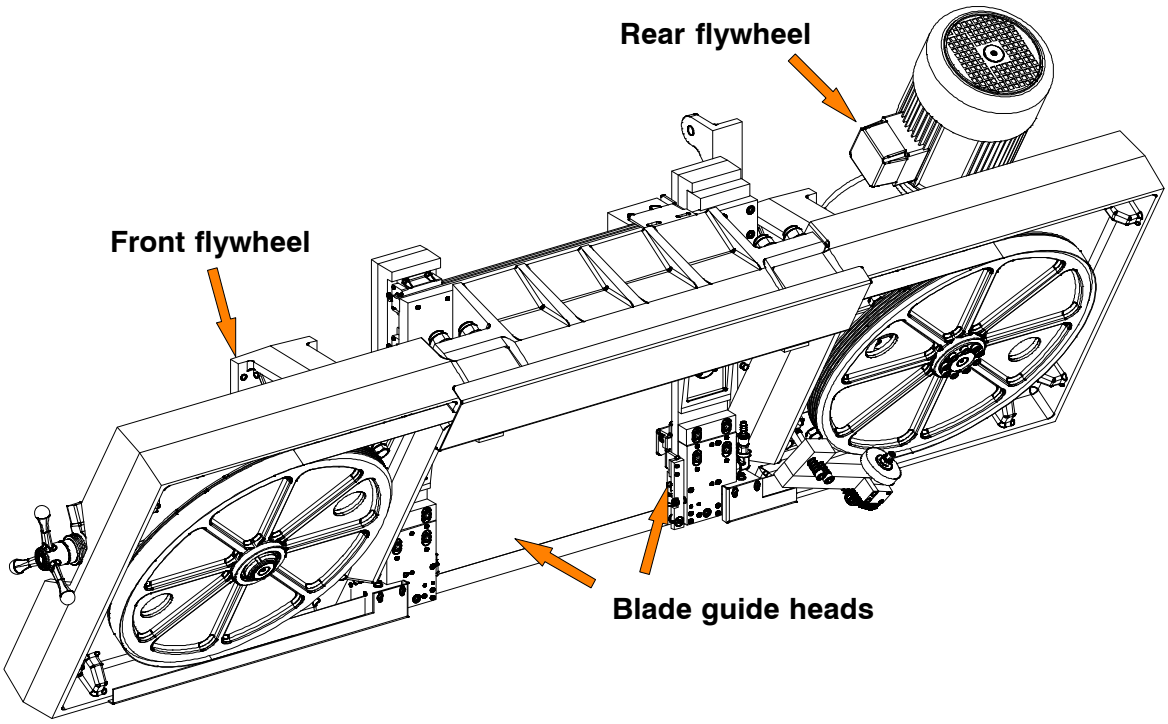

The cutting vice

The vice is the unit that clamps the workpiece during cutting; it consists of a vice support, fixed to the work table on which a mobile jaw is mounted. The opening or closing movement is carried out through the relevant keys on the consolle.

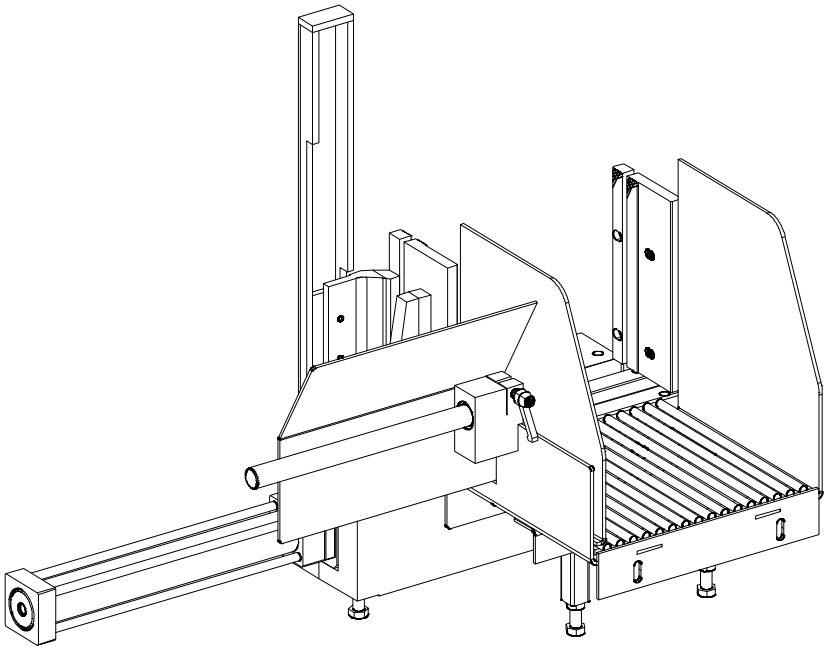

Control Panel

The control panel has a protection rating of IP 54 and contains the electronic equipment. Access to the control panel is protected by a safety panel mounted on hinges and fastened with screws, specially designed to prevent tampering.
The control panel is installed on a structural fixed console and enables the operator to steadily monitor the cutting area in total safety.

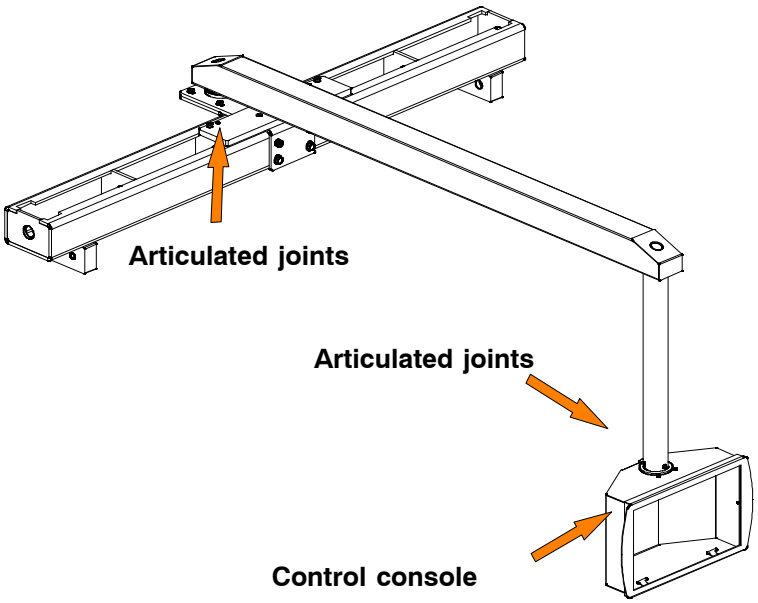

Hydraulic Power Pack Unit

The hydraulic control unit operates the cutting vice and the feeding vice and balances the weight of the cutting bow.
It is located in the machine rear part under the metal protection. The oil exchange in the circuits is operated by solenoid valves driven by the machine controller.

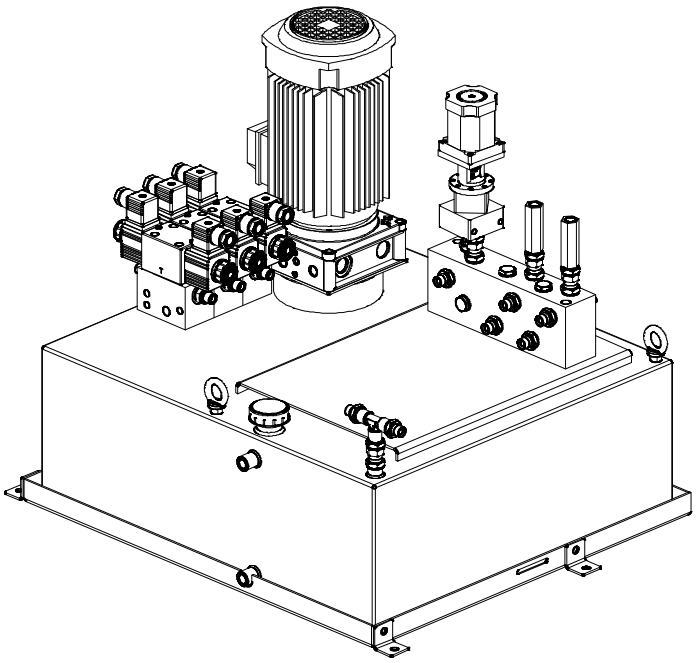

Base

This unit features a large coolant collection surface which conveys the coolant to the rear tank via the tank cover, and a swarf collection drawer.
The electric pump seated inside the tray sucks the clean liquid from the progressive filter system and makes it circulate again to ensure an efficient flowing of the processing residues and the lube−refrigeration of the cutting tool.

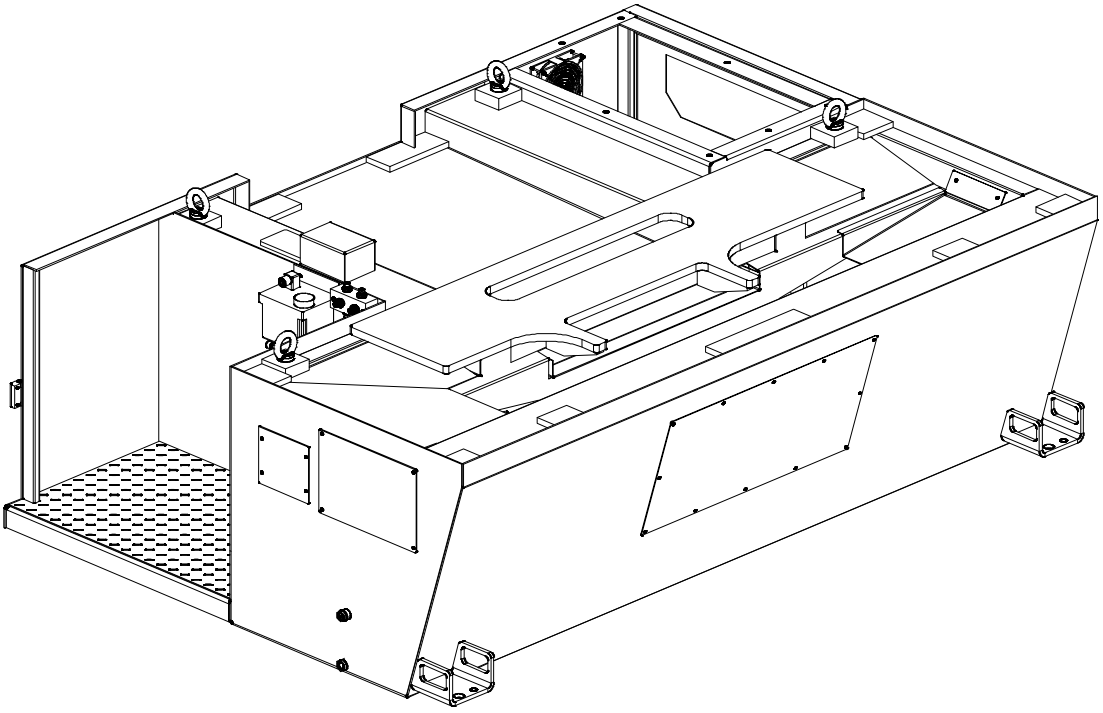

The coolant gun is on the right of the cutting plane. On the front right of the base there is a chip extractor.
The hydraulic control unit and the electric board are located in the right rear side.

Feeder

The material is fed by the feeding shuttle which clamps the material with the hydraulic vice and draws the cutting material by sliding on ground guides. The numeric control very accurately drives the stepper motor of the feeding shuttle, thus enabling the operator to set 24 sequences of 50 programs each chosen among max. 300 cutting programs, with different quantity and length, on the same bar.

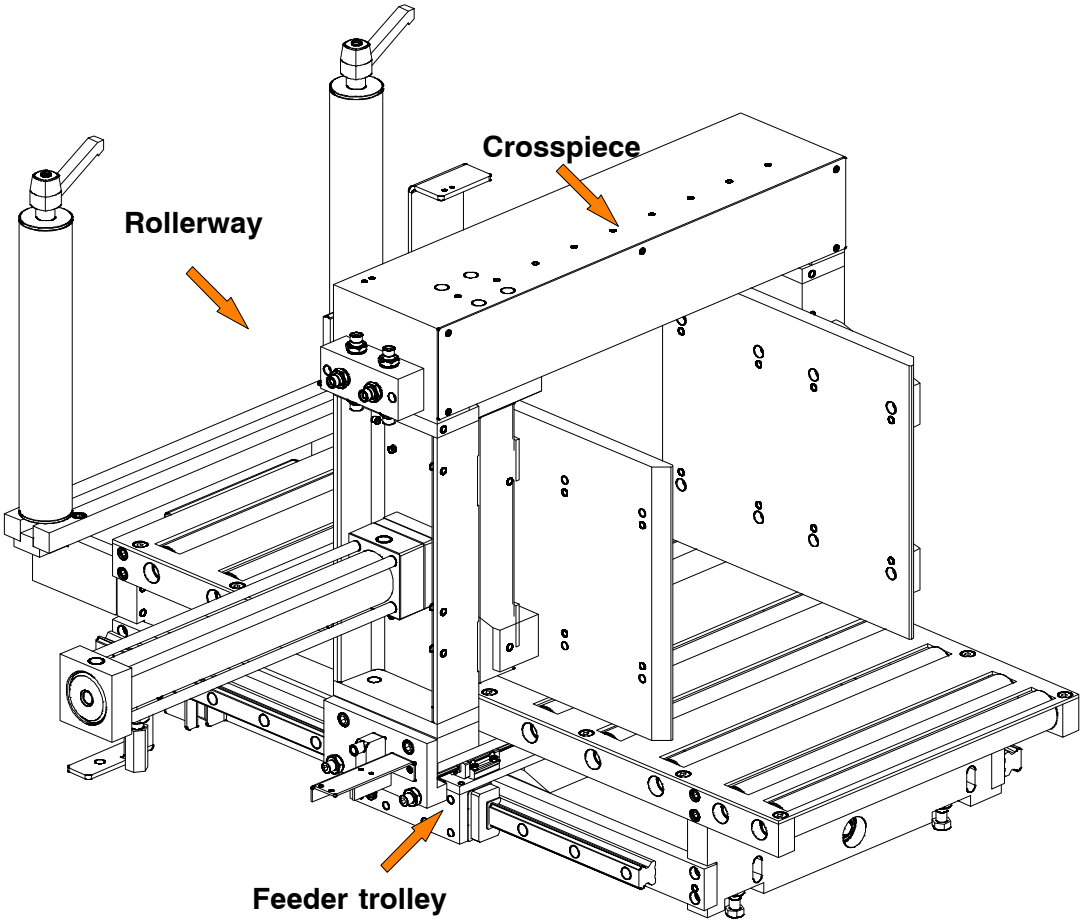

The stepper motor and the power supply structure, can supply power to bars up to 3000 Kg even when sheared, because they are equipped with a self−aligned vice.

Safety and accident prevention

3

The **H−320A** has been designed and produced in accordance with European standards. For the correct use of the machine we recommend that the instructions contained in this chapter are carefully followed.

Use of the machine

The **H−320A** band saw cutting machine is intended exclusively for cutting metallic materials, ferrous or non−ferrous, in section or solid.
Other types of material and machining are not compatible with the specific characteristics of the saw.
The employer is responsible for instructing the personnel who, in turn, are obliged to inform the operator of any accident risks, safety devices, noise emission and accident prevention regulations provided for by international standards and national laws regarding the use of the machine. The operator must be perfectly aware of the position and function of all the machine's controls.The instructions, warnings and accident prevention standards in this manual must be respected without question by all those concerned.The following definitions are those provided for by **MACHINES DIRECTIVE 2006/42/CE**

- "Danger zone": any zone in and/or around a machine in which the presence of a person constitutes a risk for the safety and health of that person.
- "Person exposed": any person finding himself either completely or partly in a danger zone.
- "Operator": the person or persons given the responsibility of installing, operating, adjusting, maintaining, cleaning, repairing or transporting the machine.

Attention

The manufacturer declines any responsibility whatsoever, either civil or criminal, should there be unauthorised interference or replacement of one or more parts or assemblies on the machine, or if accessories, tools and consumable materials are used that are different from those recommended by the manufacturer itself or if the machine is employed in a plant system and its proper function is thereby altered.

General recommendations

LIGHTING

Insufficient lighting for the types of operation envisaged could constitute a safety hazard for the persons concerned. For this reason, the machine user must provide lighting in the working area sufficient to eliminate all shadowy areas while also avoiding any blinding light concentrations. (Reference standard EN 12464−1:2011"Lighting in work environments").

CONNECTIONS

Check that the power supply cables and pneumatic feed systems comply with the maximum machine absorption values listed in the “Machine Specification” tables; replace if necessary.

EARTHING

The installation of the earthing system must comply with the requirements set out in EN 60204−1:2006/AC:2010.

OPERATOR POSITION

The position of the operator controlling machine operations must be as shown in the diagram below.

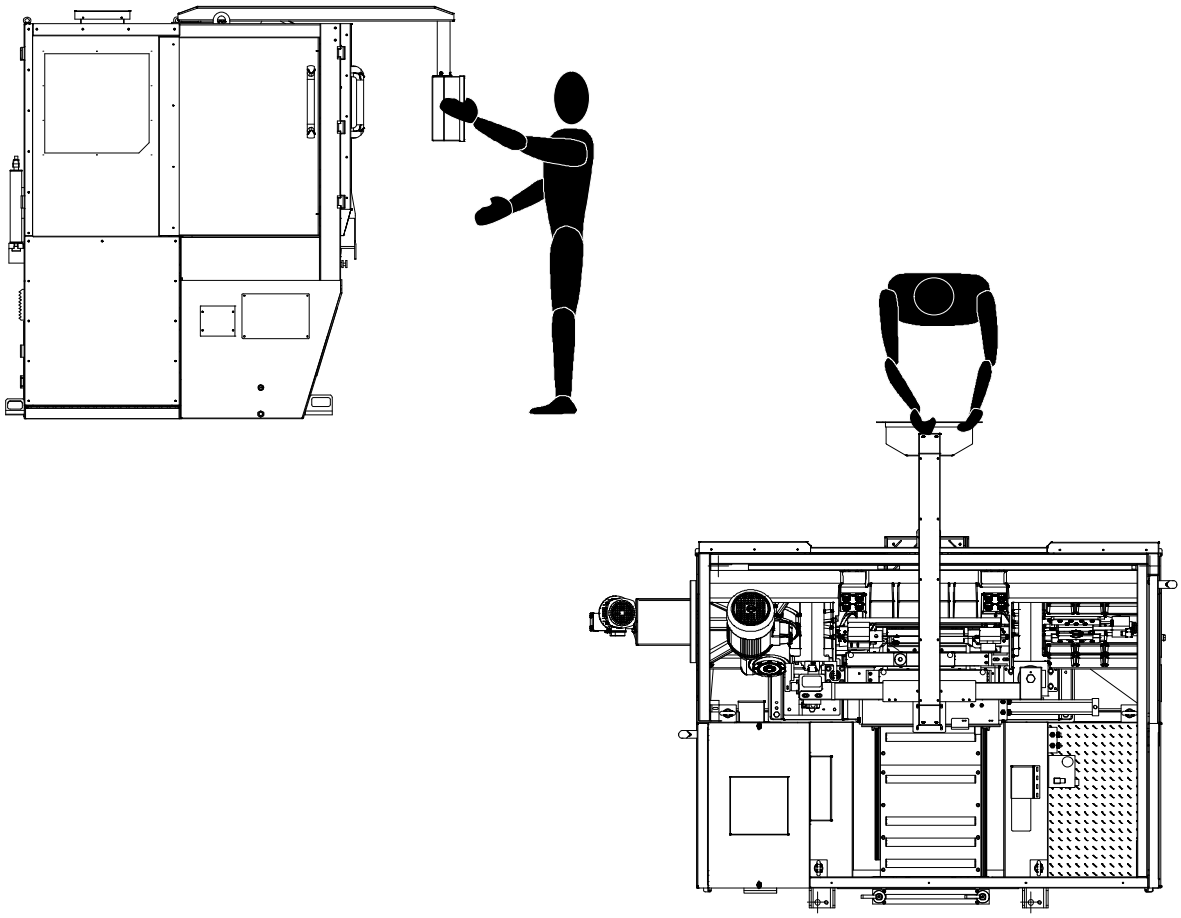

Recommendations to the operator

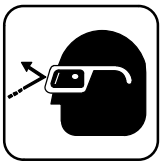

Always wear proper goggles or protective glasses.

Do not use the machine without the guards in position. Replace the polycarbonate windows, if subject to corrosion.

Do not allow hands or arms to encroach on the cutting zone while the machine is in operation.

Do not wear oversize clothing with long sleeves, oversize gloves, bracelets, necklaces or any other object that may become entangled in the machine during working; long hair must be tied back and bunched.

Always disconnect the power supply to the machine before carrying out any maintenance work whatsoever, including in the case of abnormal operation of the machine.

Before starting cutting operations, support the material at both ends of the machine using the support arm – standard, or OPTIONAL accessories such as the feed and discharge roller tables shown in the diagram below. Before removing the devices supporting and moving the material, fasten the latter in place using the machine's clamping devices or other suitable equipment.

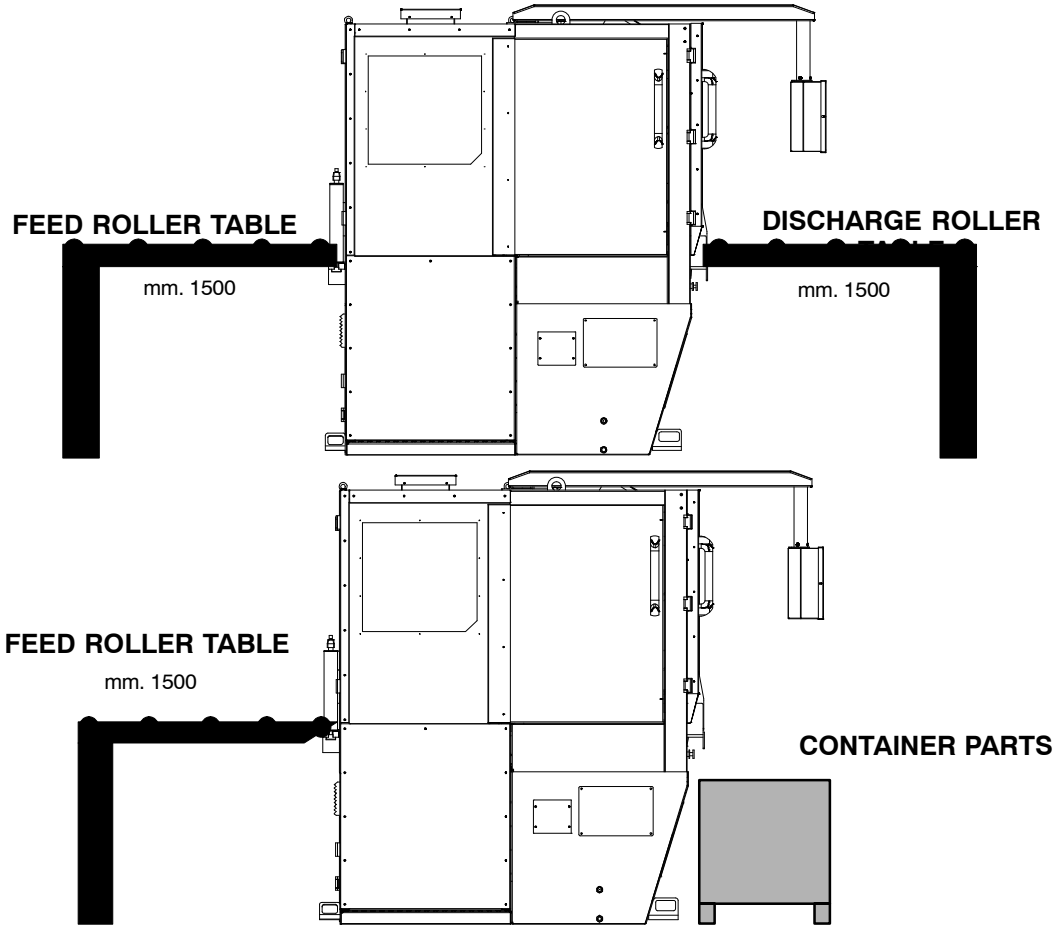

Any maintenance work on the hydraulic or pneumatic systems must be carried out only after the pressure in the system has been released.

The operator must not perform any risky operations or operations not required for the machining operation under way (e.g. remove swarf or metal shavings from the machine while cutting).

Remove equipment, tools or any other objects from the cutting zone; always keep the working area as clean as possible.

Before starting any cutting operations, ensure that the workpiece is securely held in the vice and the machine has been set correctly. A number of examples of how to clamp different profiles correctly in our machines are shown below.

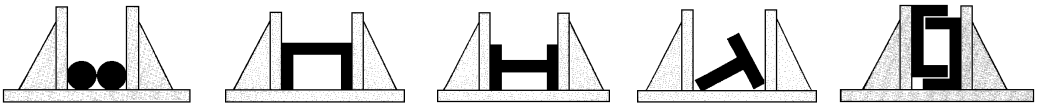

Do not use the machine to cut pieces that exceed the capacity of the machine as listed in the machine specifications.

Never move the machine while it is cutting.

Do not use blades of different sizes to those recommended in the machine specifications.

When cutting very short pieces, make sure that they are not dragged behind the support shoulder, where they could jam in the blade.

When working on the band saw, wear gloves only when handling materials and for tool changing or adjustment operations. Only perform one operation at a time and do not hold more than one item or operate more than one device simultaneously. Keep hands as clean as possible.

Warning: if the blade jams in the cut, press the emergency stop push–button immediately. If this does not free the blade, slowly loosen the vice, remove the piece and check the blade or blade teeth for breakage. Replace the blade if necessary.

Before carrying out any repair work on the machine, consult the MEP Technical Assistance Service: this can be done through a representative in the country of use of the machine.

Adjustment of the blade−guide head must only be carried out with the machine at a standstill.

Machine safety devices

This use and maintenance manual is not intended as purely a guide for the use of the machine in a strictly productive environment, it is instead an instrument providing information on how to use the machine correctly and safely. The following standards are those specified by the EEC Committee in the directives regarding safety of machinery, health and safety at work, personal protection and safeguarding of the environment. These standards have been applied to the **H−320A** band saw.

Reference standards

MACHINE SAFETY

- MACHINES DIRECTIVE 2006/42/CE;
- Directive 2014/30/UE "EMC – Electromagnetic Compatibility";
- Directive 2014/35/UE known as "Low voltage directive".
- EN 16093:2017 Machine tools - Safety - Sawing machines for cold metal
- EN ISO 12100:2010 "Safety of machinery - General principles for design - Risk assessment and risk reduction".

HEALTH AND SAFETY AT WORK

- D.lgs 81/08 and subsequent amendment D.lgs 106/09 ;Directive 91/382/CE;2003/10/CE for the protection of workers against risks caused by exposure to physical, chemical and biological agents during working;
- Directive89/391/CE and Special EEC Directives No. 89/654/CE 2009/104/CE for improvements in health and safety at work;
- Directive 2004/37/CE for the protection of workers against risks deriving from exposure at work to carcinogenic substances;
- Directive 92/58/CE and No. 79/640/CE on safety signs at work.

PERSONAL PROTECTION

- Directive89/656/CE and Regulation 2016/425/UE on the use of personal protection devices.

ENVIRONMENTAL PROTECTION

- Directive 2006/12/CE on waste disposal;
- Directive 2008/98/CE on the disposal of used oil.
- Directive 2011/65/CE on the restriction of the use of certain hazardous substances in electrical and electronic equipment (RoHS).

Protection against accidental contact with the blade

1. Metal guard screwed to the rear blade guide head;
2. metal guard screwed to the front blade guide head;
3. front head sliding support: when the head is at maximum aperture, the support ensures that the blade is covered, leaving free only the part of the blade engaged in the actual cutting, in accordance EN 16093:2017 ;

4. front protection doors, with electric limit switches, to enable the access to the cutting area only with stopped machine;
5. enclosure on the whole machine perimeter.
6. the cutting vice is started up by hydraulic devices, and the blocking of the piece occurs through a control panel key;

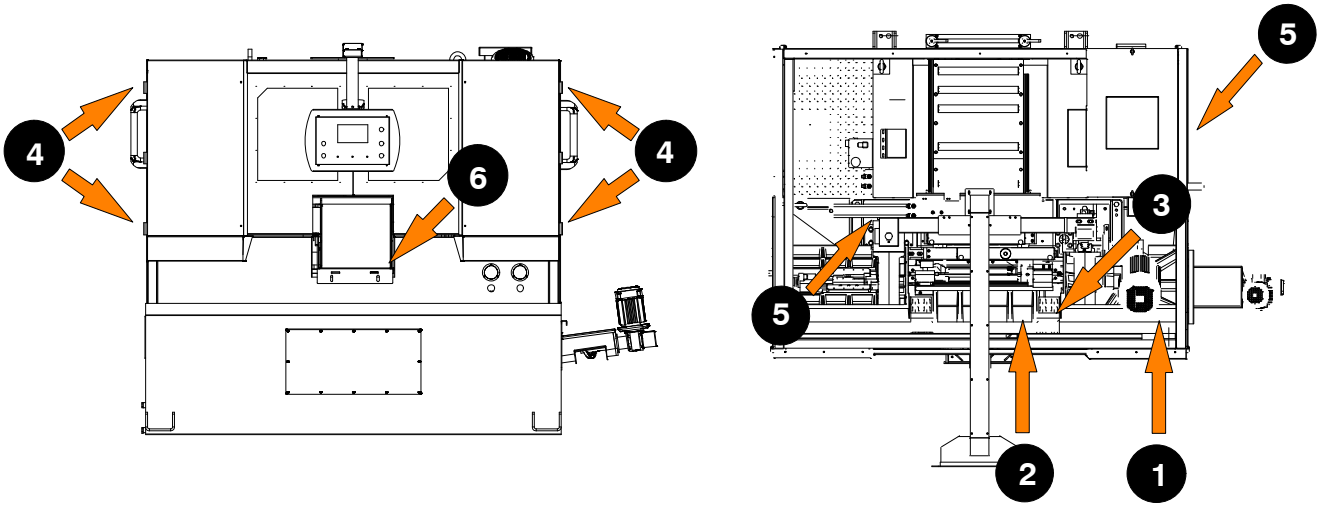

Electrical equipment

In accordance with Italian standard EN 60204−1:2006/AC:2010.

- Access to electrical control panel limited by screws and panel−lock device, allowing panel to be opened only after the electricity supply has been turned off;
- 24 Vac Control voltage for actuators, in accordance with chapter 6 or European Standard ”Control and indication circuits”, paragraph 2 ”Control Circuits” sub−section 1 ”Preferential voltage values for control circuits”;
- plant short−circuit protection by means of rapid fuses, earthing of all plant parts connected with work as well as all foreseeable accidental contact; a thermal−magnetic overload cutout switch shuts down the motor;
- protection from accidental start−up by a minimum voltage relay in case of power failure.

Emergency devices

In accordance with Italian standard EN 60204−1:2006/AC:2010.

- **Chapter 5 Section 6 Sub−section 1 ”Emergency stop device”**: «the emergency stop device immediately stops all the dangerous and other functions of the machine»;
- **chapter 6 Section 2 Sub−section 4 Point 7 ”Protective guards”:** «the removal of protective guards designed to prevent access to dangerous parts or zones causes the machine to stop immediately; replacing the guards does not restart the functions, which must be reset».

...Emergency devices applicable to the H−320A:

1. **Emergency stop**: a non−return mushroom−head pushbutton, colour red on yellow background, is located on the control panel of the machine. To release the pushbutton, the actuator must be rotated 45°. After the emergency situation has been resolved, the machine must be reset.

2. **Automatic thermal–magnetic cutout switch with thermal–magnetic relay:** the machine auto switch, has two protection systems against voltage drops. In the case of a voltage drop, all electrical components are disengaged, the machine stops immediately, and automatic restart when the power supply returns is inhibited. Another function is that of resetting the thermal relay provided to protect against overcurrents.
3. **Loading cell for band tensioning detection:** the machine stops immediately if the blade breaks or pressure in the tensioning cylinder drops.
4. **Protective guard for blade:** a coded microswitch is operated if the blade cover is accidentally or intentionally opened during the machine operating cycle, immediately shutting down all functions.

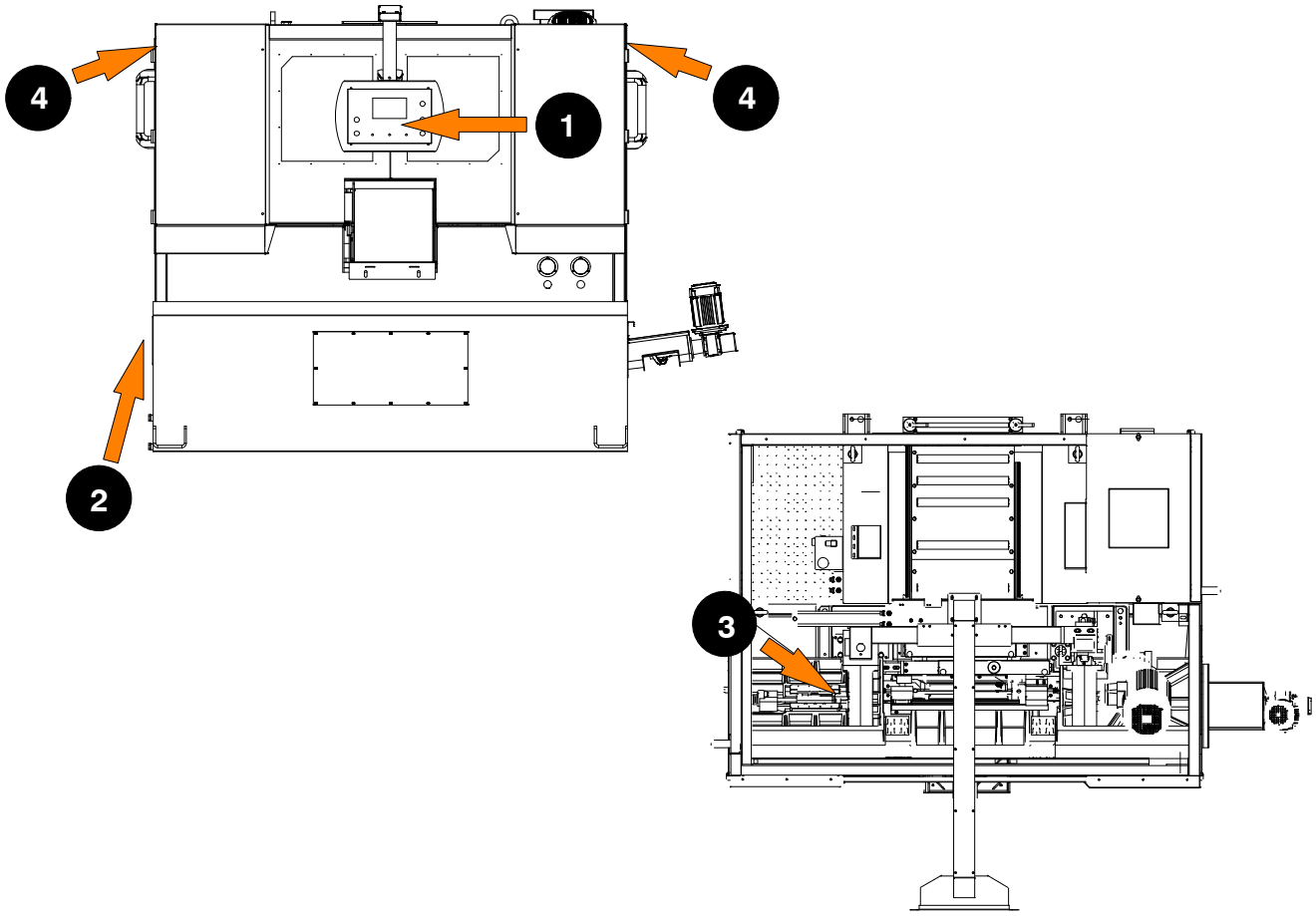

Noise level of the machine

Noise can cause hearing damage and represents one the problems faced by many countries who adopt their own standards. In accordance with the**MACHINES DIRECTIVE 2006/42/CE** , we are listing the standards that specify noise levels for machine tools.
The following paragraph explains the modes and the detected sound power and pressure values released by the sawing machine.
These values comply with norm EN 16093:2017, EN ISO 12100:2010 and EN ISO 4871:2009,concerning the rules for drawing and presenting a procedure for noise tests and the declaration and check of sound emission values by machines and equipment.

Noise level measurement

Noise levels are measured using an instrument known as an Integrator noise−meter which registers the equivalent continuous acoustic pressure level at the work station.The damage caused by noise depends on three parameters: level, frequency and duration. The equivalent level concept Leq combines the three parameters and supplies just one indication. The Leq is based on the principle of equal energy, and represents the continuous stationary level containing the same amount of energy, expressed in dBA, as that actually fluctuating over the same period of time.This calculation is made automatically by the integrator noise−meter. The measurements are taken every 60 seconds, in order to obtain a stabilised value. The reading stays on the display for a sufficient time to enable a reading to be taken by the operator.Measurements are taken by holding the instrument at approximately 1 metre from the machine at a height of 1.60 metres above the platform at the operator's work station.
Two measurements are taken: the first while the machine operates without cutting anything, the second while cutting in manual mode.

Noise level values

Identification	
Machine type	Band saw for metal applications
Model	**H−320A**
Reference standard	EN ISO 3746:2010

Results		
Test 1st	**Description**	Steel cut C53− tube thickness 350x280 mm bi−metal blade 4640x34x1.1
	Results	**Mean sound level (Leq) 72,45 dB (A)** Environmental correction (K) 3,84 dB(A) Peak sound power (Lw) 83,60 dB(A)
Test 2nd	**Descriprion**	Steel cut C40 − HPE 300x300 mm bi−metal blade 4640x34x1.1
	Results	**Mean sound level (Leq) 70,33 dB(A)** Environmental correction (K) 3,84 dB(A) Peak sound power (Lw) 81,48 dB(A)
Test 3rd	**Description**	Ø 150 mm solid tube in chromed stainless steel bi−metal blade 4640x34x1.1
	Results	**Mean sound level (Leq) 71,95 dB(A)** Environmental correction (K) 3,84 dB(A) Peak sound power (Lw) 83,11 dB(A)

Vibration emission

This sawing machine complies with the norms EN 1299:1997 + A1:2008 and EN ISO 20643:2008/A1:2012, as the machine vibration emission on the devices controlled by the operator does not exceed the threshold of 2.5 m/s^2

Electromagnetic compatibility

As from 1 January 1996 all electrical and electronic appliances bearing the CE marking that are sold on the European market must conform to Directive

2014/30/UE e 2014/35/UE and **MACHINES DIRECTIVE 2006/42/CE**. The prescriptions regard two specific aspects in particular:

1. "EMISSIONS: during its operation, the appliance or system must not emit spurious electromagnetic signals of such magnitude as to contaminate the surrounding electromagnetic environment beyond clearly prescribed limits";
2. "IMMUNITY: the appliance or system must be able to operate correctly even when it is placed in an electromagnetic environment that is contaminated by disturbances of defined magnitude".

The following text contains a list of the applied standards and the results of the electromagnetic compatibility testing of machine model **H−320A**.

Emissions

- EN 61000−6−4:2007 + A1:2011 Electromagnetic Compatibility (EMC) – Generic standard regarding emissions. Part 6–4: Industrial Environment.
- EN 55011:2009 + A1:2010 Industrial, scientific, and medical radio frequency appliances (ISM). Characteristics of radio frequency disturbance – Limits and methods of measurement.
- EN 50370−1:2005 Electromagnetic compatibility (EMC) – Product family standard for machine tools – Part 1: Emission

CONDUCTED EMISSIONS				
Gate A	**Freq. (MHz)**	**Q−peak limit (dBuV)**	**Mean value limit (dBuV)**	**Result**
A.C. power supply input	0.15 – 0.5 0.5 – 5 5 – 30	79 – 73 (linear reduction with log of frequency) 73 73	66 – 60 (linear reduction with log of frequency) 60 60	Complies

CONDUCTED EMISSIONS – ANALYSIS OF INTERMITTENT DISTURBANCES	
Gate	**Result**
A.C. power supply input	Not applicable

IRRADIATED EMISSIONS			
Gate	**Freq. (MHz)**	**Q−peak limit (10 m) (dBuV/m)**	**Result**
Enclosure	30 – 230 230 – 1000	40 47	Complies

Immunity

- IEC 61000−6−2:2005 + AC:2005 Electromagnetic Compatibility (EMC) – Generic standard on immunity. Part 6–2: Industrial Environment.
- EN 61000–4–2 + A1 (1996–1999) Electromagnetic Compatibility (EMC) – Part 4: Test and measurement techniques – Section 2: Electrostatic discharge immunity tests – Basic publication.
- IEC 61000−4−3:2006 + AMD1:2007 + AMD2:2010 Electromagnetic Compatibility (EMC) – Part 4: Test and measurement techniques – Section 3: Radiated, radio–frequency, electromagnetic field immunity test.

- IEC 61000−4−4:2012 Electromagnetic Compatibility (EMC) – Part 4: Test and measurement techniques – Section 4: Fast transients/bursts immunity tests – Basic publication.
- IEC 61000−4−5:2014 + AMD:2017 Electromagnetic Compatibility (EMC) – Part 4: Test and measurement techniques – Section 5: Surge immunity test.
- IEC 61000−4−6:2013 Electromagnetic Compatibility (EMC) – Part 4: Test and measurement techniques – Section 6: Immunity to conducted interference, induced by radio frequency fields.
- IEC 61000−4−11:2006 Electromagnetic Compatibility (EMC) – Part 4: Test and measurement techniques – Section 11: Voltage dips, short interruptions and voltage variations immunity tests.
- EN 50370−2:2003 Electromagnetic compatibility (EMC) – Product family standard for machine tools – Part 2: Immunity

IMMUNITY TO ELECTROSTATIC DISCHARGES			
Gate	**Test levels**	**Evaluation criterion**	**Result**
Enclosure	contact 4 kV steel plate 4 kV in air 8 kV	B	Complies

IMMUNITY TO VOLTAGE (BURSTS)			
Gate	**Test levels**	**Evaluation criterion**	**Result**
A.C. power supply input	2 kV	B	Complies

IMMUNITY TO CONDUCTED ELECTROMAGNETIC FIELDS			
Gate	**Test levels**	**Evaluation criterion**	**Result**
A.C. power supply input	10V	A	Complies

IMMUNITY TO IRRADIATED ELECTROMAGNETIC FIELDS			
Gate	**Test levels**	**Evaluation criterion**	**Result**
Enclosure	10 V/m	A	Complies

Machine installation

4

Packaging and storage

MEP S.p.A. use packing materials that guarantee the integrity and protection of the machine during its transport to the customer.

The type of packing differs according to the size, weight and destination. Therefore the customer will receive the machine in one of two following ways:

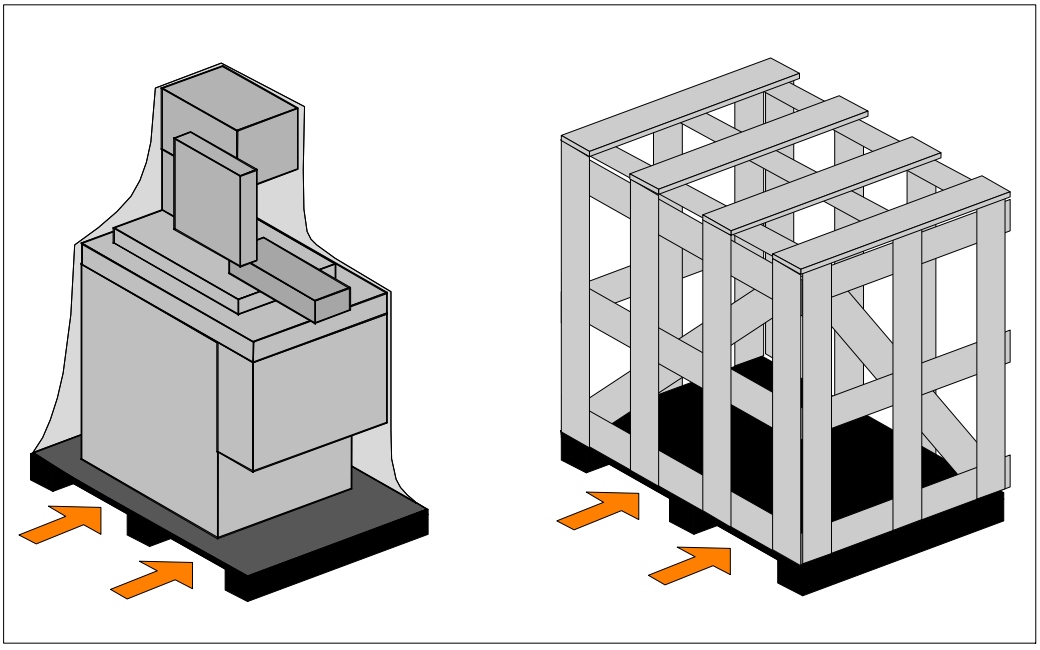

1. on a pallet with straps and heat–shrink plastic;
2. on a pallet with straps, heat–shrink plastic and a wooden crate.

Warning In both cases, for correct balancing the machine must be handled using a fork–lift truck, inserting the tines at the points indicated by the arrows, using the reference marks on the crate itself.

Attention Before carrying out lifting operations, make sure that the weight of the machine, as indicated on the crating or other packaging, is within the forklift truck load limit.

Attention Do not handle the packed machine using slings.

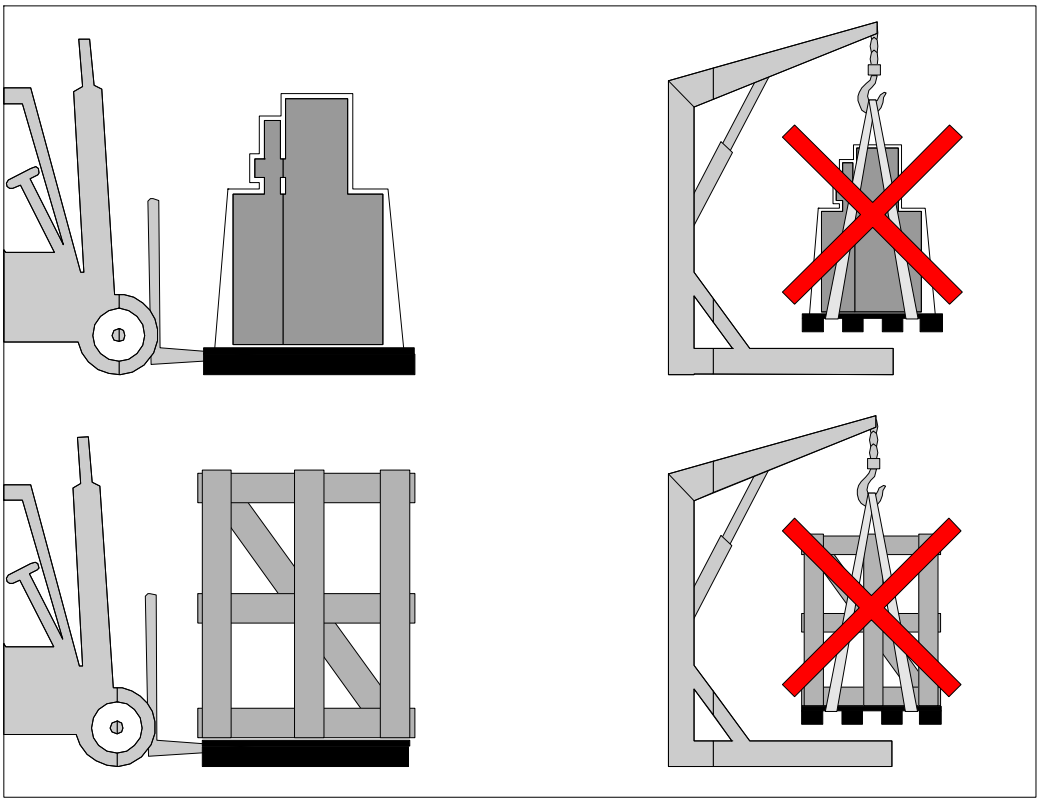

Attention When storing, machines palletized and shrink–wrapped must not be stacked two high, and machines pallettized and crated must not be stacked three high.

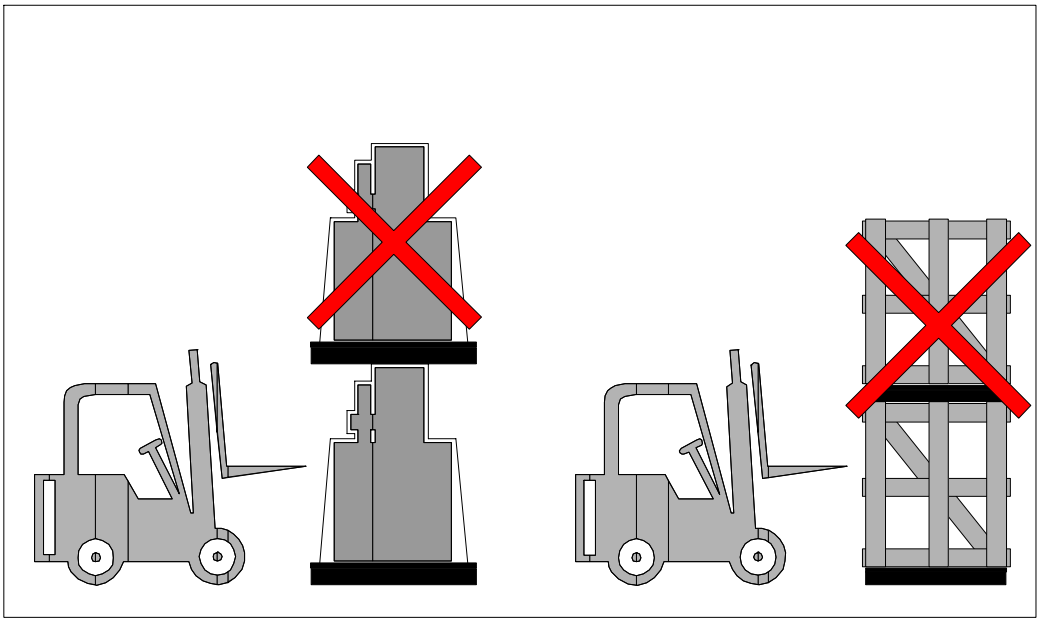

To install the machine, first remove the packing, paying particular attention not to cut any electric wires or hydraulic hoses; if necessary use pliers, a hammer and a cutter.
Open crate in the illustrated order:

1. remove nails and lift the top of the cage;
2. remove nails and lower walls;

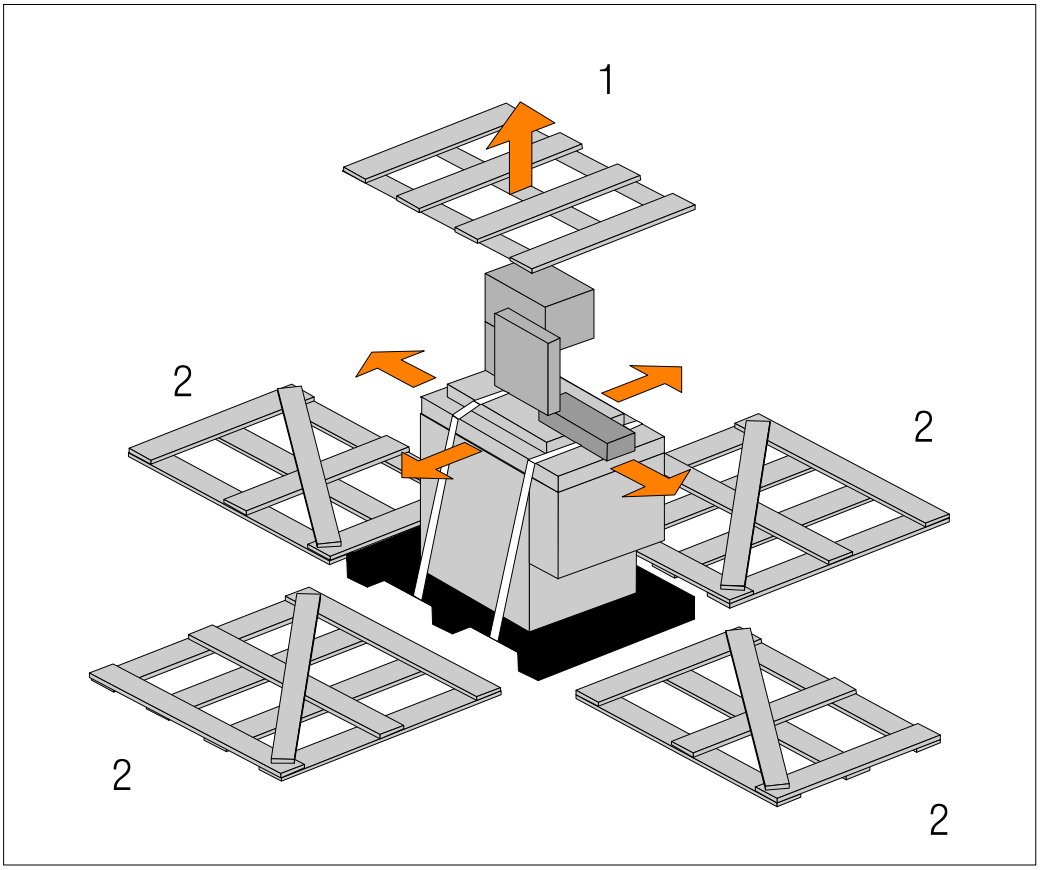

3. remove heat–shrink covering;
4. remove the straps;
5. remove nails from pallet securing planks and remove planks;
6. remove the front panel and insert fork tines.

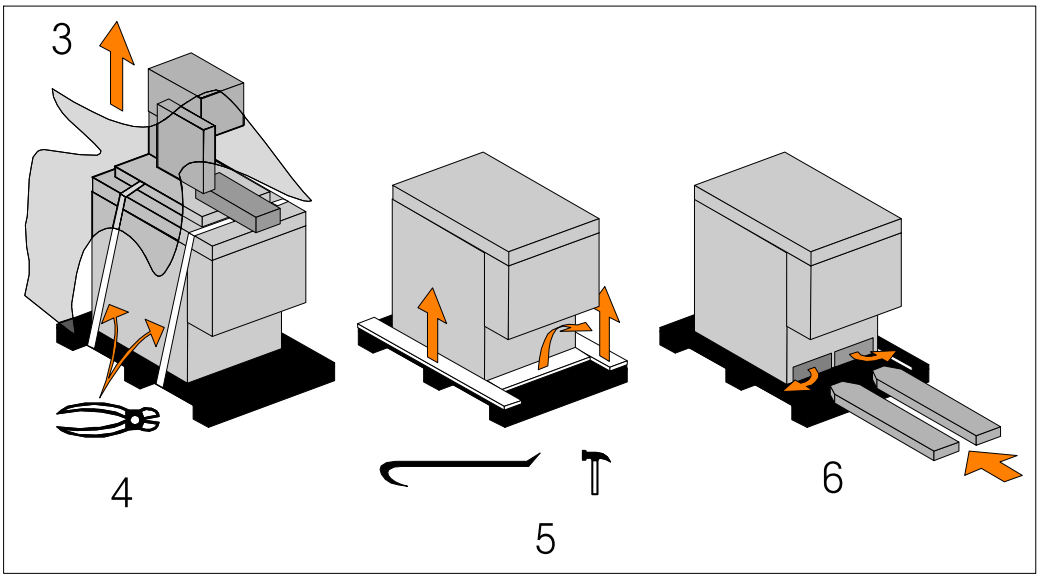

To locate the machine in the workplace, **the machine dimensions** and necessary operator working space, including **the spaces laid** down in safety standards, **must be taken into account.**

Anchoring the machine

The base of the machine is anchored to the floor by two permanent studs located on the sides of the base. The studs are screwed into nuts previously sunk into the concrete, and tightened from above with lock nuts. The schematic specifications set out in Chapter 1 should be taken into account when positioning the machine.

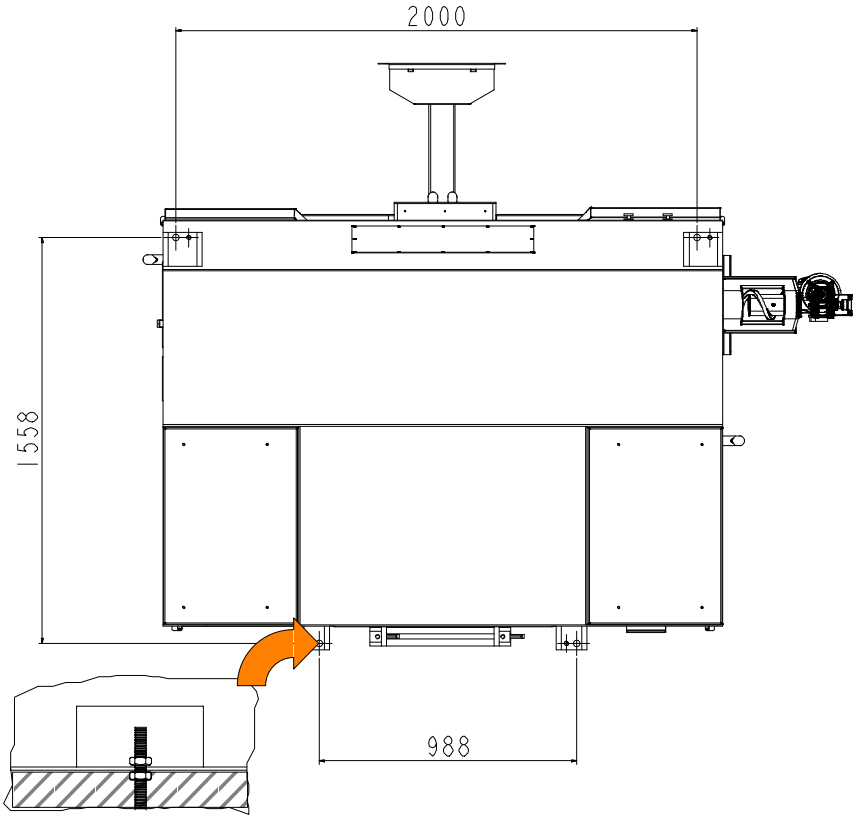

Minimum requirements

For the machine to function correctly, the room in which it is to be installed must satisfy the following requirements:

- power supply voltage/frequency: refer to the values on the rating plate;
- temperature of machine location: from – 10 to + 50°C;
- relative humidity: not more than 90%
- lighting: not less than 500 Lux.

Warning The machine is already protected against voltage variations, but will only run trouble–free if the variations do not exceed ± 10%.

Check list

Before starting installation, check that all the accessories, whether standard or optional, supplied with the machine are present. The basic version of the **H–320A** machine is supplied complete with:

CHARACTERISTICS	STANDARD	OPTIONAL
The bow is made from alloy cast iron to give more stability to the machine and also for longer blade duration	✓	
Bow runs on linear guides with ball–bearing slides	✓	
Bow movement with hydraulic cylinder on linear guides with ball–recirculating slides	✓	
Protection from contact with the machine's moving parts (see drawing with overall dimensions)	✓	

CHARACTERISTICS	STANDARD	OPTIONAL
Blade 4640 x 34 x 1,1 mm	✓	
Blade 4640 x 41 x 1,1 mm		✓
Hydraulic vertical vice (max 350 x 350)*		✓
Cabinet for electrical and electronic equipment with totally identifiable cabling	✓	
Control and enabling system protected from electrical or electromechanical hazard at input and output	✓	
User interface with 7” touchscreen and mechanical keys, for the operating functions of the sawing machine; it ensures reliable, simple and intuitive use and the control of all cutting parameters in real time	✓	
Programmable head travel limit via control panel according to dimensions of bars to be cut	✓	
Software to control, assess and correct in real time the shearing stress, the shearing torque and the blade tensioning.	✓	
Machine with CNC MEP 50−Windows “CE” Based, designed by MEP for the automation of the machines it produces	✓	
Laser projector to position the bar accurately to carry out non−standard or facing cuts and lamp for lighting the cutting area	✓	
Control from keyboard to move the pulley for belt substitution	✓	
Hydraulic control unit for driving the blade−holding bow and for opening/closing the cutting and feeding vices	✓	
Emergency with signalling of open blade door with interlocked safety limit switches	✓	
Electro−mechanical actuator and dynamic control for the blade tightening	✓	
Vice pressure adjustment	✓	
Inverter for continuous blade speed regulation single range from 15 to 115 m/min	✓	
Inverter for continuous blade speed regulation single range from 15 to 200 m/min*		✓
Dredging motor−driven chip ejector, that can be installed on the right and on the left	✓	
Nesting vertical vices (hydraulic vertical vices and scrap reduction jaws)*		✓
Scrap recovery kit*		✓
Great quantities of cutting liquid (120 lt/min)	✓	
Steel blade−guiding cutting heads, with rollers and recordable hard metal slides, can be open for easier blade substitution, with prepared nozzles for traditional lubrication and minimal lubrication (optional)	✓	
Automatic adjustment of the front blade−guide head according to the dimensions of the bars to be cut to make the blade as stable as possible and to protect its section not involved in the cutting	✓	
Brush for cleaning the blade	✓	
Band rotation control with immediate stop system in case of tool blockage	✓	
Feed roller table K110HD		✓
Discharge roller table K110HD		✓
Acoustic signal and flashing light device for machine−stop	✓	
Feed device with recirculating ball/lead screw with 600 mm	✓	
Maximum non−feedable bar waste 120 mm	✓	
Self−aligning feed vice for bar feed (Including deformed bars)	✓	
Feeder with vertical rollers for containing the bars	✓	
Work table spray gun	✓	
Coolant tank incorporated in pedestal	✓	
Pair of electric pumps for the band lubrication and cooling.	✓	

CHARACTERISTICS	STANDARD	OPTIONAL
Coolant flow for conveying chips	✓	
Cutting oil 5 lt		✓
GSM module for SMS sending, or for remote assistance, software updates and changes*		✓
Jaws to reduce scraps to max. 25 mm*		✓
Blade deviation control*		✓
Software updates or changes through USB key to be fitted in the suitable slot on the control console	✓	
Libraries with indications on the best band rotation speed and bow feeding speed according to the geometry and hardness of the material being processed	✓	
Min. lubrication system		✓
Machine preset for being handled by lift truck	✓	
Bi–metal blade for section and solid cuts		✓
Wrenches, Instruction Manual, complete with spare parts order form in corresponding user language	✓	

***ACCESSORIES AVAILABLE ON REQUEST**

The bag of accessories is enclosed in the machine before being packed and contains:

- hex wrenches 3/4/5/6/10 mm
- 10 mm socket wrench;
- 36 mm wrench;
- blade cleaning brushes;
- use and Maintenance manual, including order form for parts in relevant user language.

Connection to the power supply

Before connecting the machine to the power supply, check that the socket is not connected in series with other machines. This requirement is fundamental for the good operation of the machine.

To connect the machine to the power supply, proceed as follows:

▶ connect the power supply cable of the machine to a plug which matches the socket to be used. (EN 60204–1; par. 5.3.2)

CONNECTION FOR **"5–CORE"** WIRE SYSTEMS WITH NEUTRAL

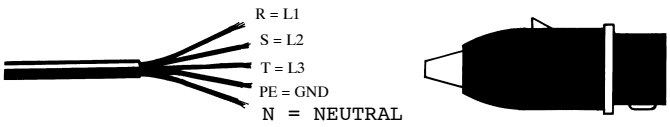

CONNECTION FOR **"4–CORE"** WIRE SYSTEMS WITH NEUTRAL

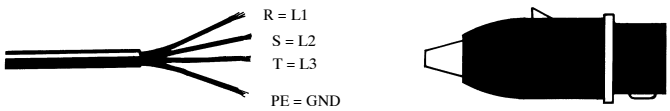

Attention

When using systems with a neutral wire, special care must be taken when connecting the **blue** neutral wire, in that if it is connected to a phase wire it will discharge the **phase voltage** to the equipment connected for **voltage: phase–neutral.**

▶ Insert the plug in the socket, ensuring that the mains voltage is the same as that for which the machine has been setup.

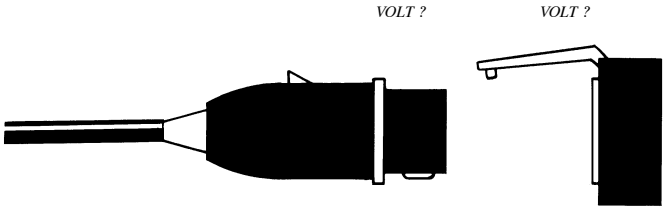

▶ Power the machine, rotating the main switch on the base right side (the control console lights up);

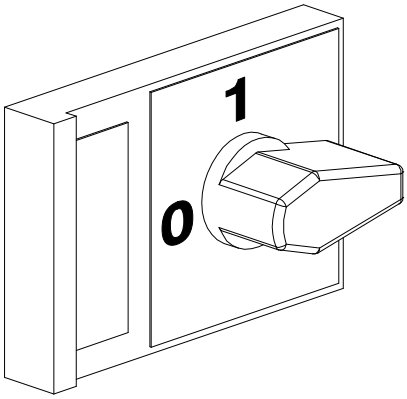

▶ press the ON button on the control console;

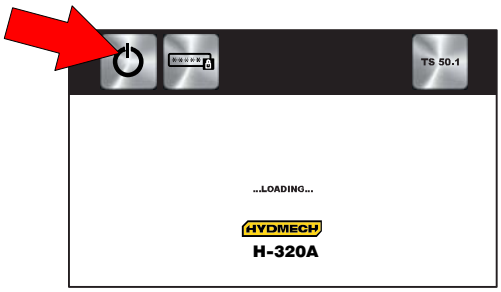

▶ press RESET.

The above sequence (ON and RESET buttons) must be performed each time the machine is switched on and before tensioning the saw band during a normal production cycle.

N.B. The machine will not start if the tension of the saw band is not between 600–900 Kg.

Ensure that the hydraulic power pack rotation is correct. To do this, proceed as follows:

▶ make sure the machine is not in emergency status (red mushroom head button released); otherwise, release the emergency stop button and press RESET.

▶ Select the semiautomatic machining mode, pressing the box shown in the figure on the touch screen.

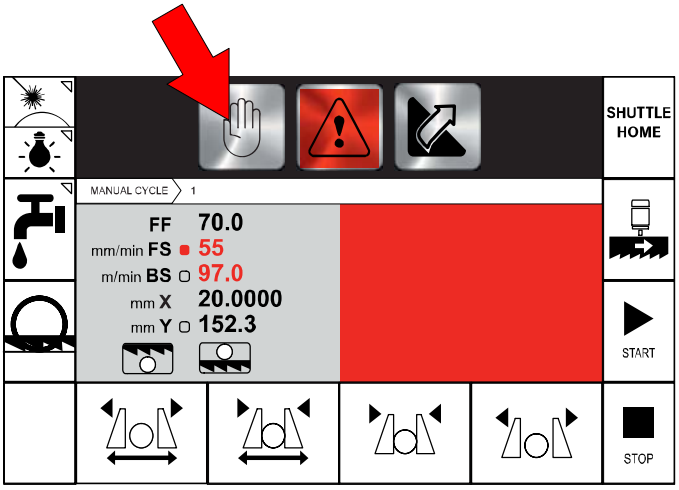

▶ Enable the band rotation by holding the control enabling key and the key shown in the figure (F6) pressed; the box lights on to indicate it has been selected.

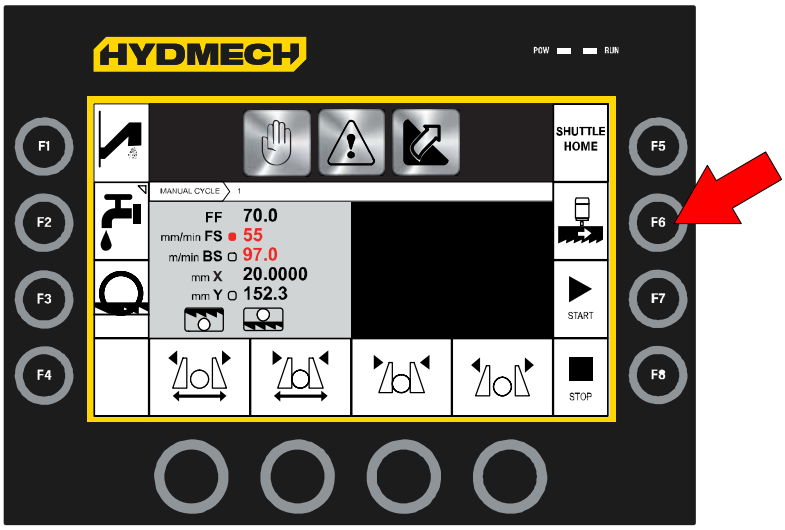

▶ Start the cutting cycle holding the control enabling key and the key shown in the figure (F7) pressed; the band starts turning and the machine cuts. At the cut end the head goes up again, ready to make a new working cycle.

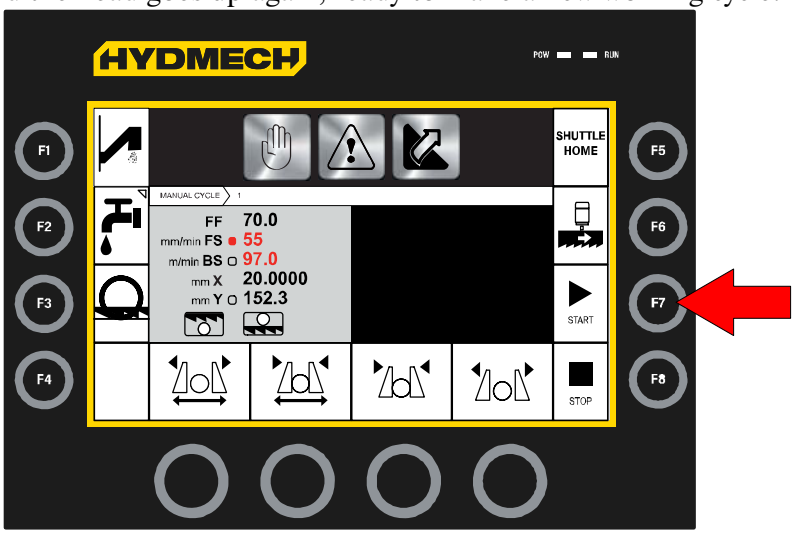

Attention

Ensure that the blade moves in the correct direction as shown in the above figure. If it does not, simply reverse two of the phase wires on the machine power supply input.

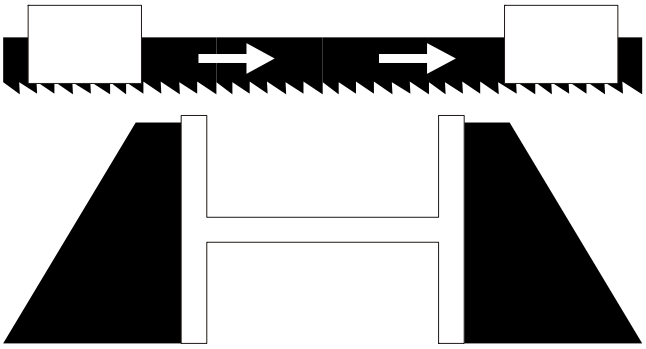

The sawing machine is now ready to start the work for which it was designed. Chapter 5 provides a detailed description of the various functions of the machine and its operating cycles.

Description of machine operation

5

This chapter analyses all the machine functions. We begin with a description of the pushbuttons and other components on the control panel.

Description of the control panel

The control console is housed inside the control panel in an IP 54 rated housing which is tamperproof and resistant to dust and moisture. The control panel swivels on two articulated joints so that it can be positioned by the operator for greater ease of use and safety. The control console for the **H–320A** is illustrated below.

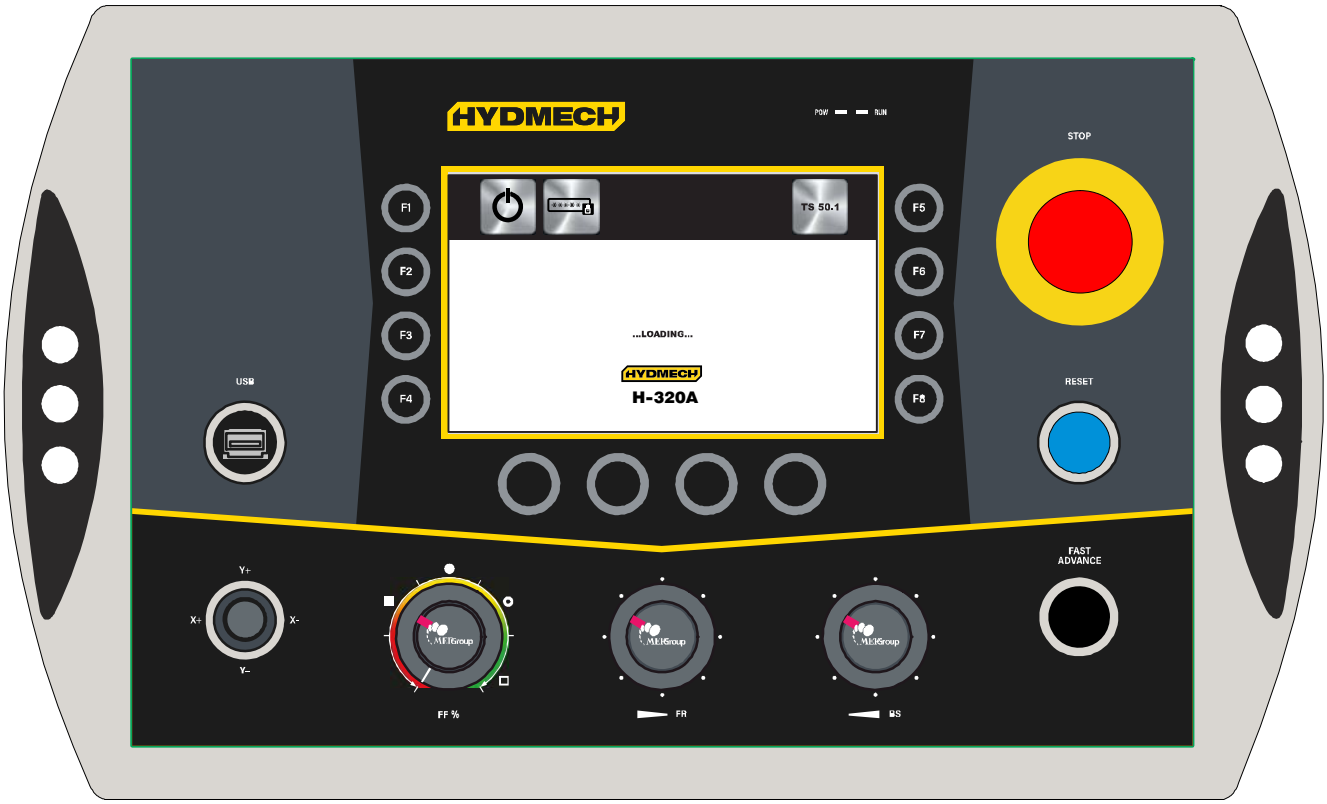

Key for control console keyboard

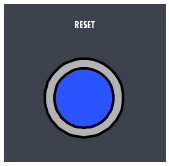

RESET:
Press to reactivate machine functions after an alarm.

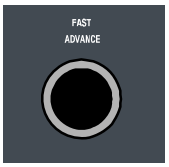

ENABLE COMMANDS:
Hold pressed to enable machine commands.

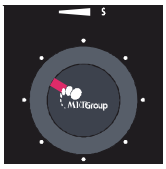

KNOB S:
This adjusts the band rotation speed.

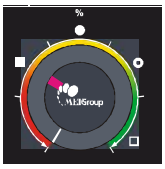

KNOB A%:
Adjusts the current absorption depending on the machine cutting force

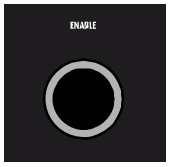

ENABLE COMMANDS:
Hold pressed to enable machine commands.

EMERGENCY STOP:
This button will stop both the hydraulic and blade motors. The head motion will cease. The vises remain as they are, but if closed, they will lose gripping force. For this reason all long stock should be supported so that it will not fall.
To reset the button, simply rotate through 45°.

JOYSTICK:
This moves the head upwards–downwards and rightwards–leftwards while the enable commands button is pressed.

KNOB F:
This adjusts the head descent speed.

USB PORT:
Communication port for the software update and the machine diagnostics

THERMAL–MAGNETIC CIRCUIT–BREAKER WITH UNDERVOLTAGE COIL

On the left side of the control board, the machine is equipped with a main switch that, when set ON (1), powers the machine.
The main switch is fitted with three power failure protection systems. In fact, in the event of a power failure, this switch disconnects all the electrical devices, causing the machine to immediately shut down, and prevents it from automatically starting up again when power is restored. This device also resets the thermal relay fitted to protect against current overloads.

Symbol key

The key for the symbols used on the display follows.

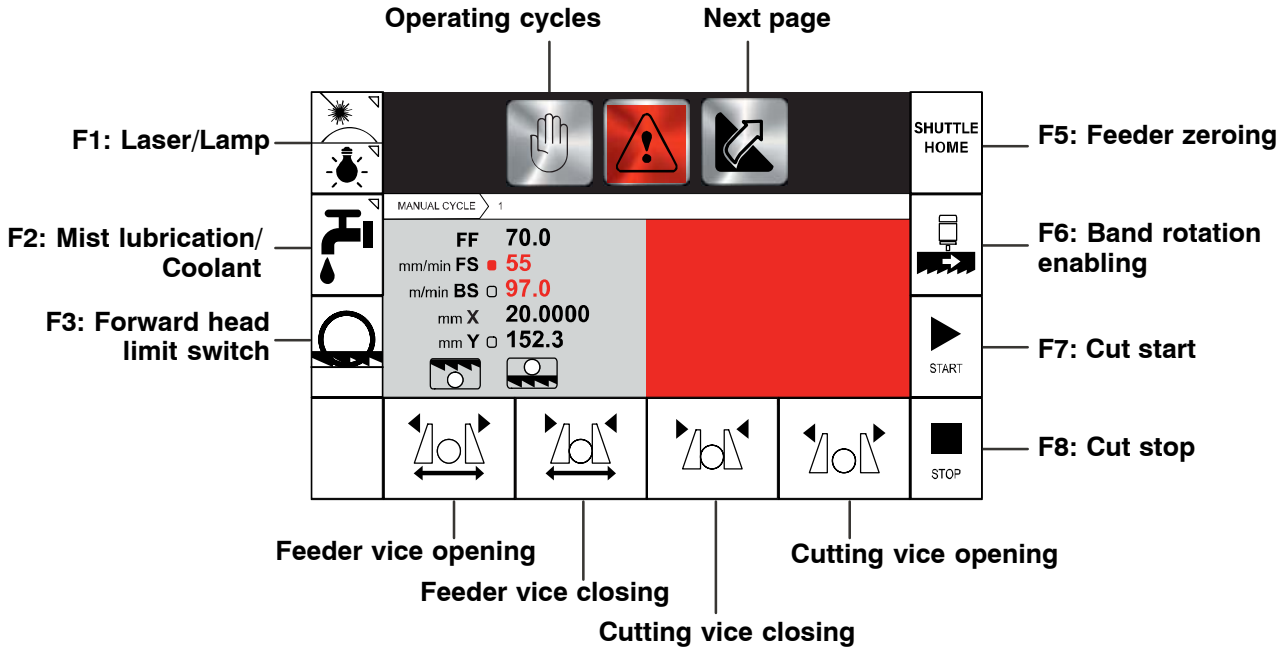

Pressing the “Next page” key, you can display the second machining screen:

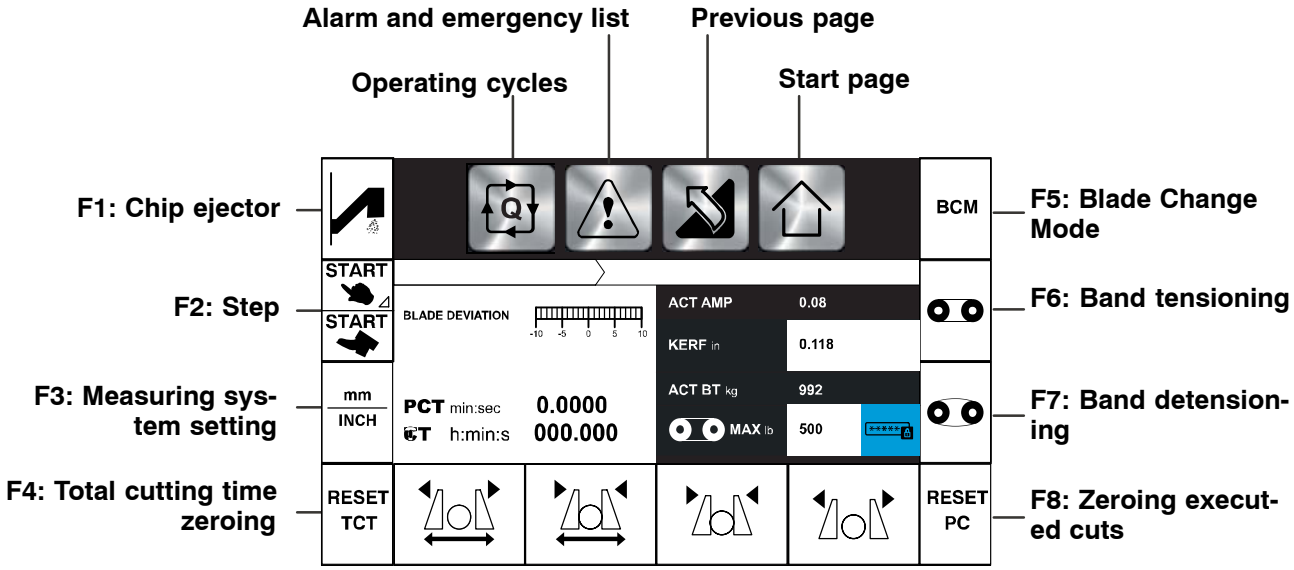

Basic instructions for carrying out a cutting operation cycle

Blade tension

To increase blade life it is recommended to tension the blade at the beginning of the work shift and to detension it at the end.
The saw machine cannot work if the blade tensioning value is not within 600 and 1600 kg range (default values within machine parameters).
To check the blade tensioning value it is necessary to get in the second working screen:

▶ From the first working screen, touch the green arrow on the display to get in the second working screen.

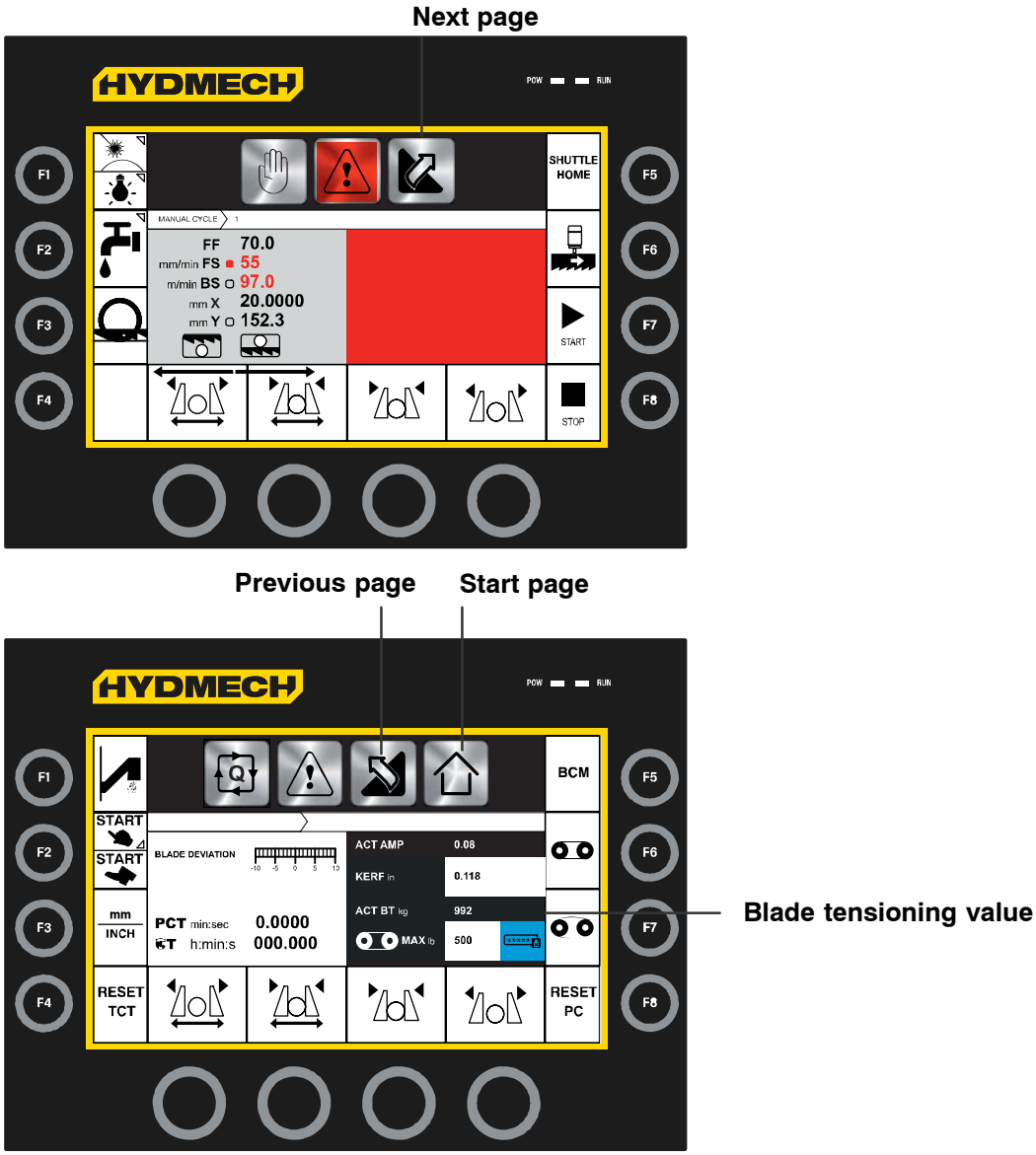

▶ Press the F5 key shown in the figure (the relevant box lights on) to activate the Blade Change Mode. In this way the keys for band tensioning and detensioning F6–F7 are activated.

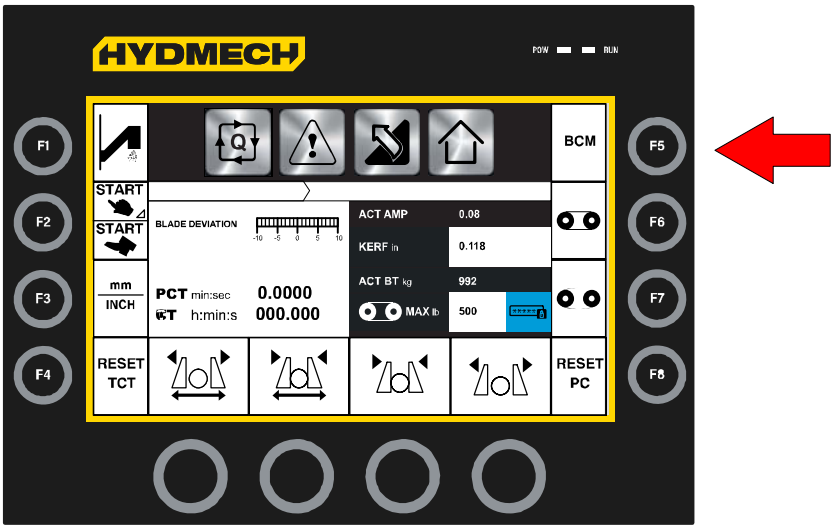

▶ Then press the band tensioning (F6) or detensioning (F7) key.

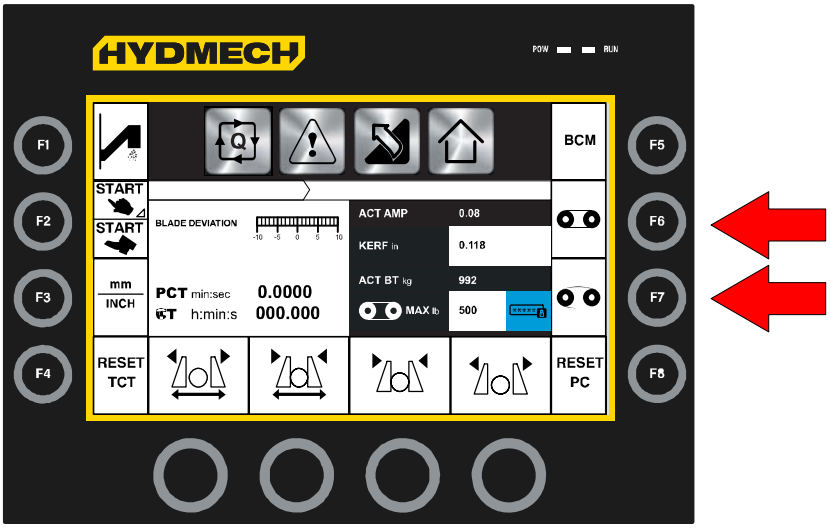

Moving the cutting head up and down

The cutting head can be moved up and down by pressing the enable commands button and using the joystick at the same time. Refer to the control console keyboard description in this chapter.

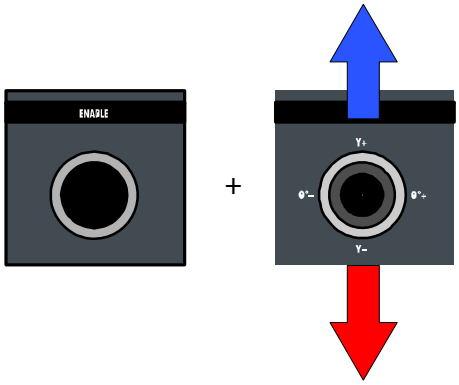

Manoeuvring the feeder

The feeder can be moved using the joystick, holding the control enabling key pressed at the same time. Due to safety reasons, the movement is enabled only if the head is completely up.

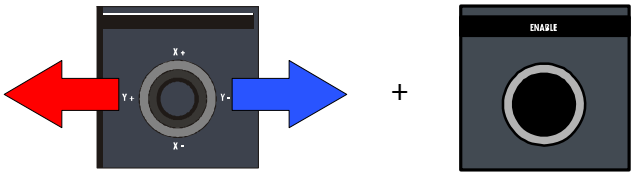

Clamping the work piece in the vice

Vice opening and closure, for the cutting vice and the feeder vice, are controlled by the corresponding buttons on the control console.

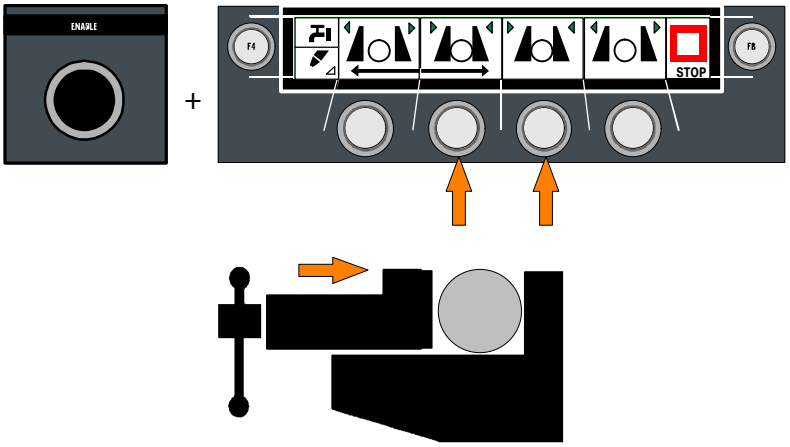

However, to ensure that the workpiece is securely clamped in the vice, proceed as follows:

- ▶ make sure the workpiece dimensions do not exceed the machine's cutting capacity;
- ▶ make sure the piece is correctly supported on both sides of the machine;

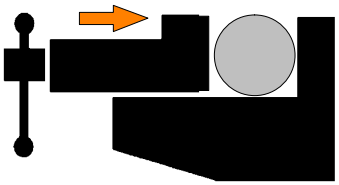

- ▶ Close the cutting vice by holding the control enabling button and the vice closing button pressed at the same time.

▶ make sure that the material is well blocked by trying to move it manually

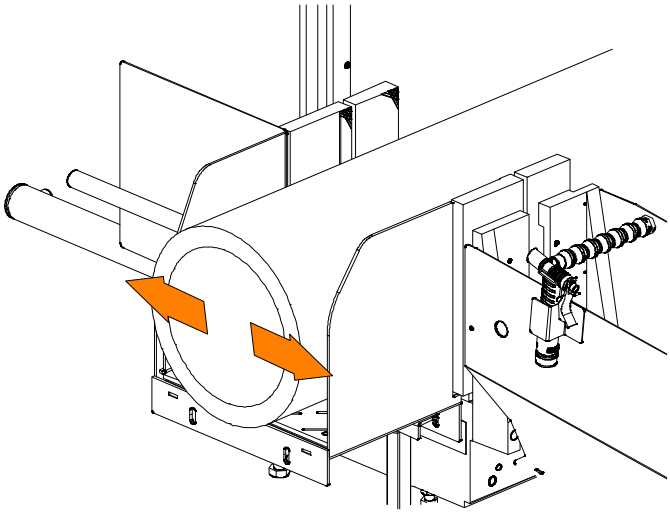

Width of cut

The machine is fitted with protections that protect the entire blade stroke leaving only the part of the blade required to make the cut itself exposed. This includes the rear (fixed) head and the front (mobile) head, as required by current standards.

The cutting width is automatically adapted with the positioning of the cutting vice.

▶ Position the workpiece on the work table in the vicinity of the blade downstroke trajectory and clamp it in the vice;

N.B. The machine is supplied with a laser projector for the positioning of the material under the blade vertical.

Warning Adjust the position of the piece–unloader guide paying.

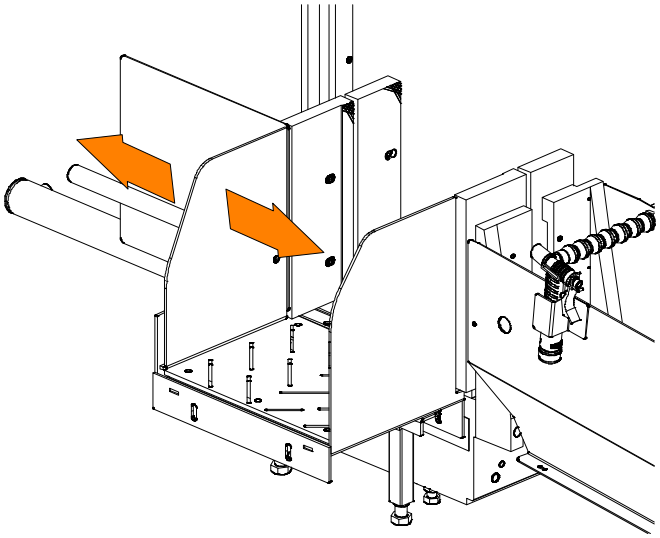

Preliminary check list for cutting operation

To guarantee complete safety during cutting cycles, the operator should work through a check list of the entire apparatus, checking:

▶ blade tension;
▶ that the work piece is properly clamped in place;
▶ that the blade teeth are correct for the job to be begun;
▶ that the speed selected is right for the kind of piece to be cut;
▶ that all protections are in place and correctly locked;
▶ the level of lubricant/coolant and that the electropump is activated;
▶ that the blade downstroke speed and cutting pressure are correct.

Starting up the machine

The presentation and start−up display appears when the machine is switched on.

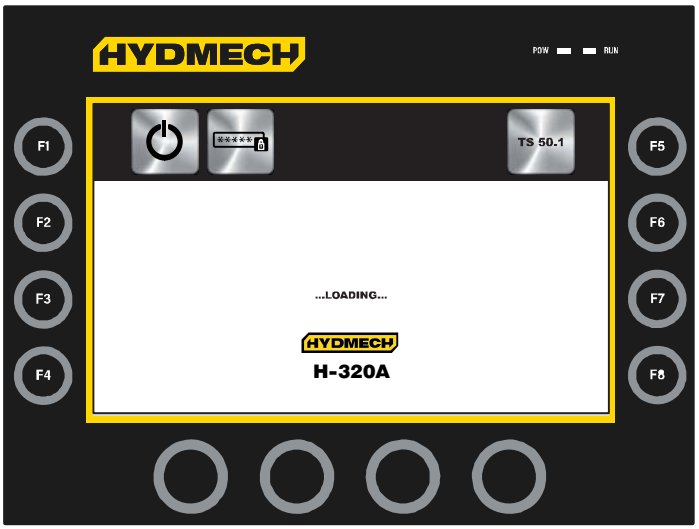

▶ Tap on the box with the on symbol on the touchscreen.

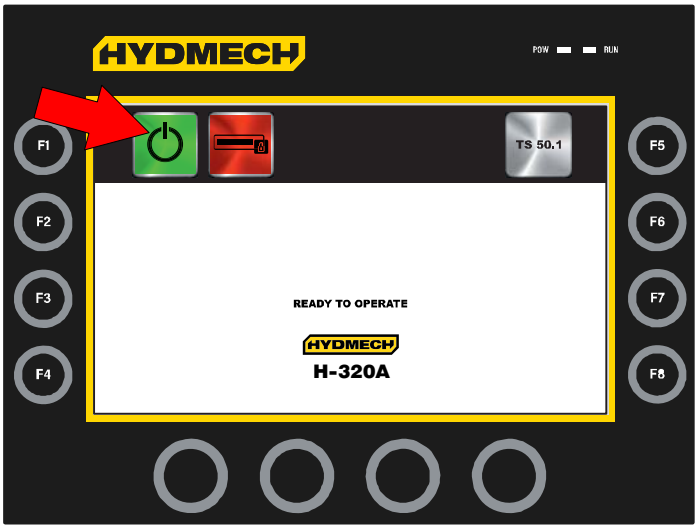

▶ press reset and release the emergency mushroom button if pressed, the head rises completely.

▶ Zero the feeder by pressing holding down the key enabling command and the key shown in figure (F5).

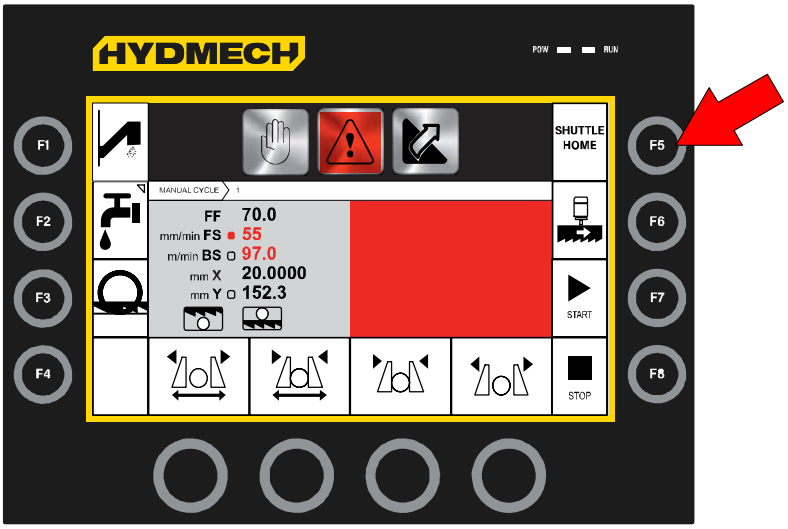

This sawing machine can carry out single or series cuts stored in max. 100 programs (job), that can even be repeated, to be ordered in a 5 preset sequence (queue) compose by 20 programs each one.

▶ Press the box shown in the figure until the symbol of the wished cycle is displayed.

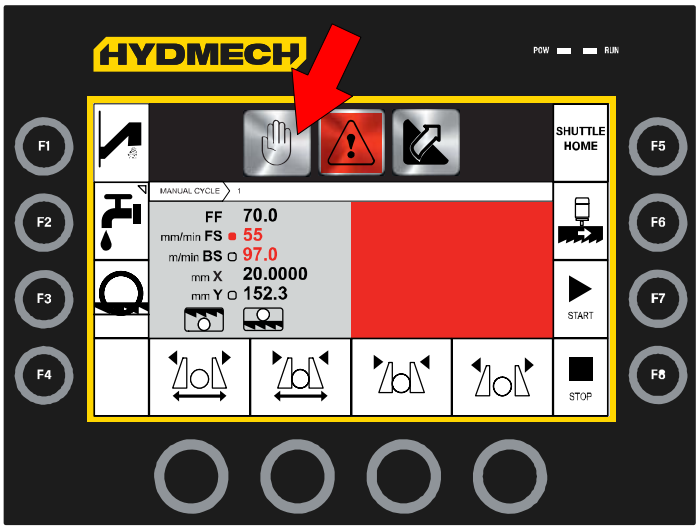

The available machining cycles are: manual, automatic with single program and automatic with continuous program.
In the manual cycle the cutting only involves the setting of the rear head limit switches (RHLS) and forward head limit switches (FHLS); then, after having positioned the material at the wished cutting length, start by the Cut start key (F7).
As for the automatic cycle, it can operate with single or automatic program.

During the machining cycle, by pressing the box in the figure, it is possible to check the machine operating parameters:
FF = Feed Force, value of the cutting force that can be set through the potentiometer from the control board.
FR = Feed Rate, value of the cutting head lowering speed that can be set through the potentiometer from the control board.
BS = Blade Speed, value of the band rotation speed that can be set through the

potentiometer from the control board.

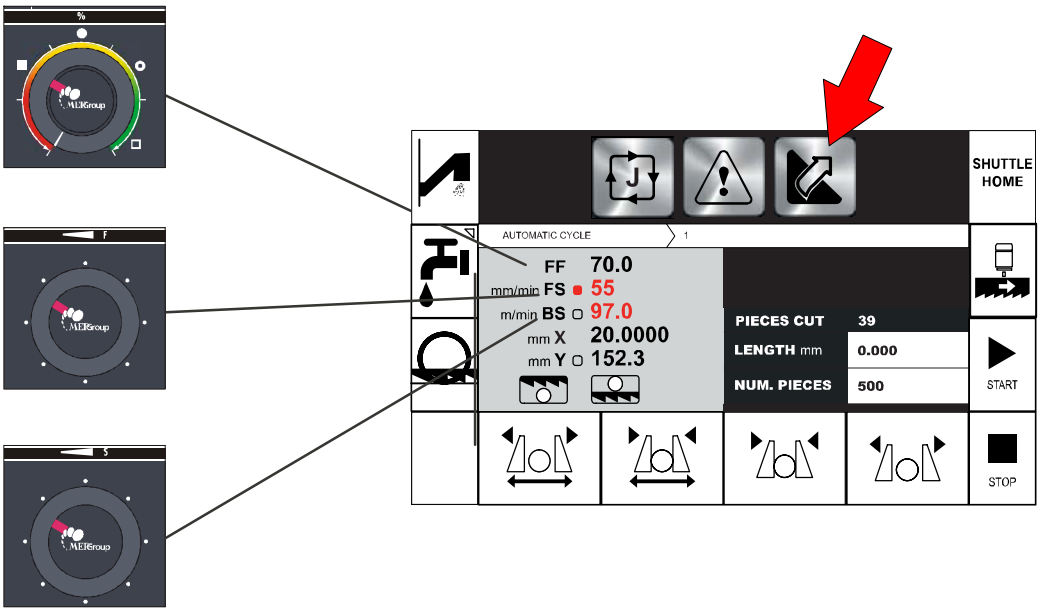

Pressing the arrow key shown in the figure the second page of the operating parameters can be displayed:
Kerf = blade thickness
Blade deviation = deviation blade
Act BT = Actual Blade Tension, current value of blade tension;
Act AMP = Actual Ampere, current value of motor absorption;
PCT = Partial Cutting Time;
TCT = Total Cutting Time.

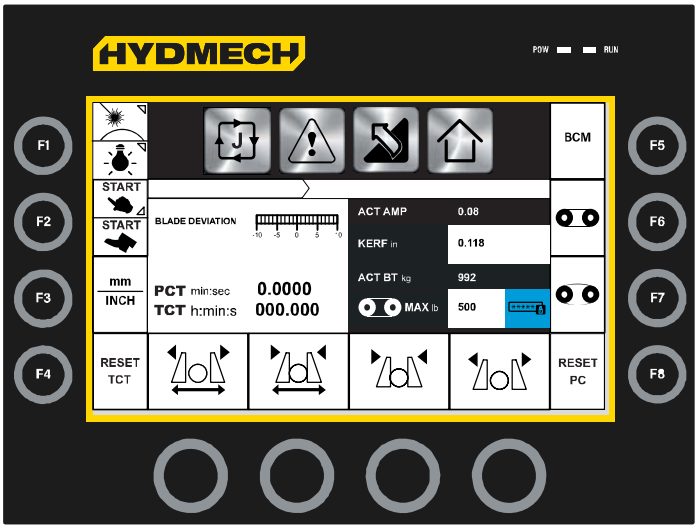

N.B. Pressing the key shown in the figure the decimal metric measuring system or the Imperial measuring system can be set.

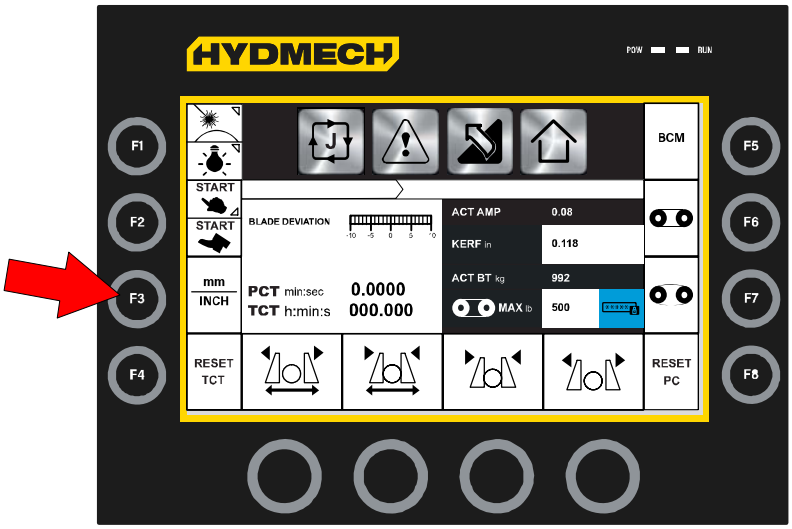

Cutting cycles

This sawing machine can carry out single or series cuts stored in max. 100 programs (job), that can even be repeated, to be ordered in a 5 preset sequence (queue) compose by 20 programs each one.

▶ After the initialization of the sawing machine the display shows the following screen. Press the box shown in the figure until the symbol of the wished cycle is displayed.

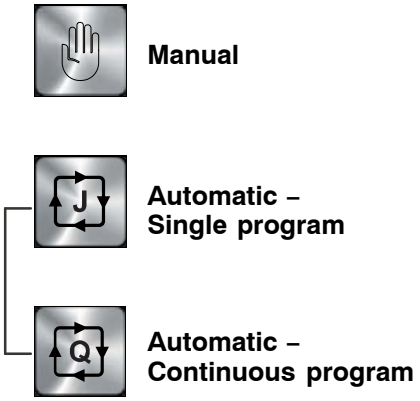

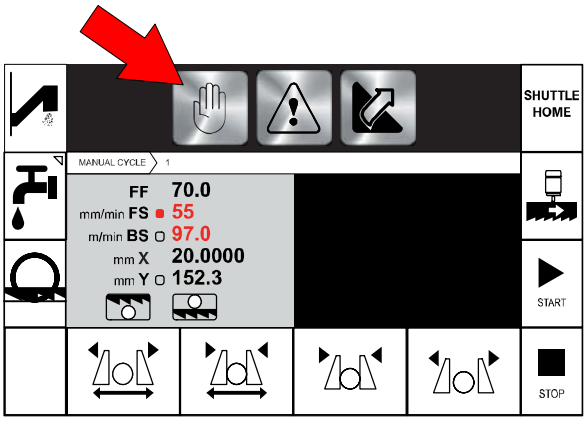

The available machining cycles are: manual, automatic with single program and automatic with continuous program.
In the manual cycle the cutting only involves the setting of the rear head limit switches (RHLS) and forward head limit switches (FHLS); then, after having positioned the material at the wished cutting length, start by the Cut start key (F7).
As for the automatic cycle, it can operate with single or automatic program.

Cutting stroke setting

To set the cutting stroke it is necessary to determine the RHLS (rear head limit switch) and FHLS (forward head limit switch) points.

▶ To set the RHLS point just press the cycle start key (F7), after having pressed the band rotation enabling key (F6), to start the band rotation and the head lowering: in this way the RHLS (rear head limit switch) point is automatically stored and determines the head start position when the cycle is started.

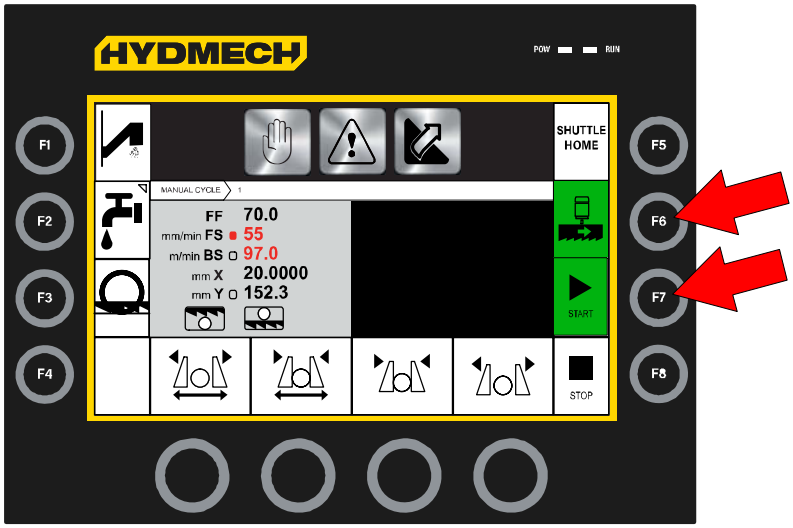

▶ To set the FHLS after having set the RHLS point, delete the existing FHLS point lowering the head using the joystick; the FHLS setting box (F3) starts flashing to indicate that the FHLS point has been deleted.

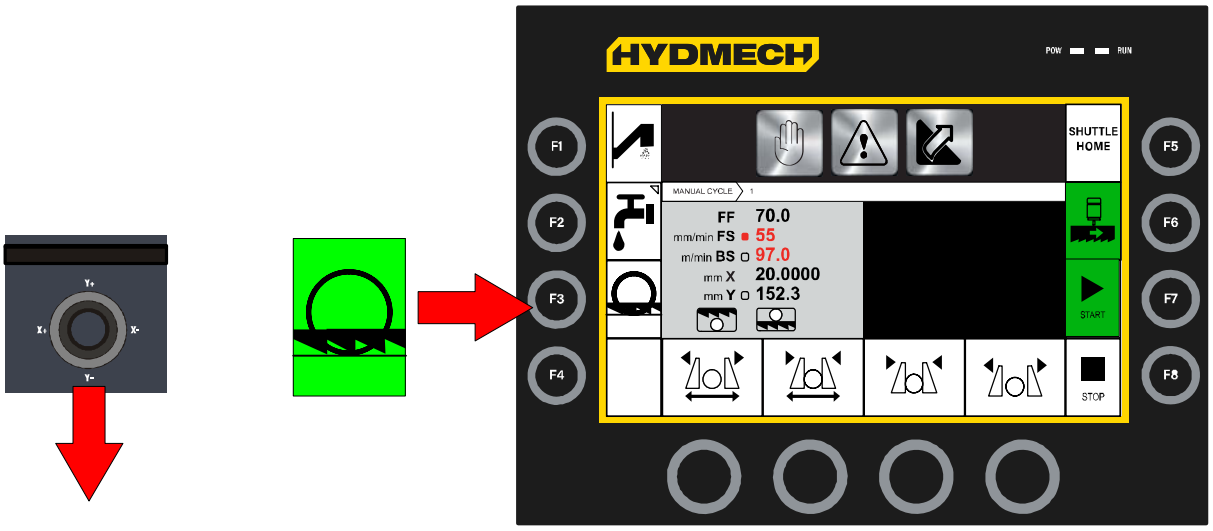

▶ When the head reaches the wished cutting end point, press the FHLS setting key (F3) shown in the figure, the corresponding box lights up to indicate that it has been set.

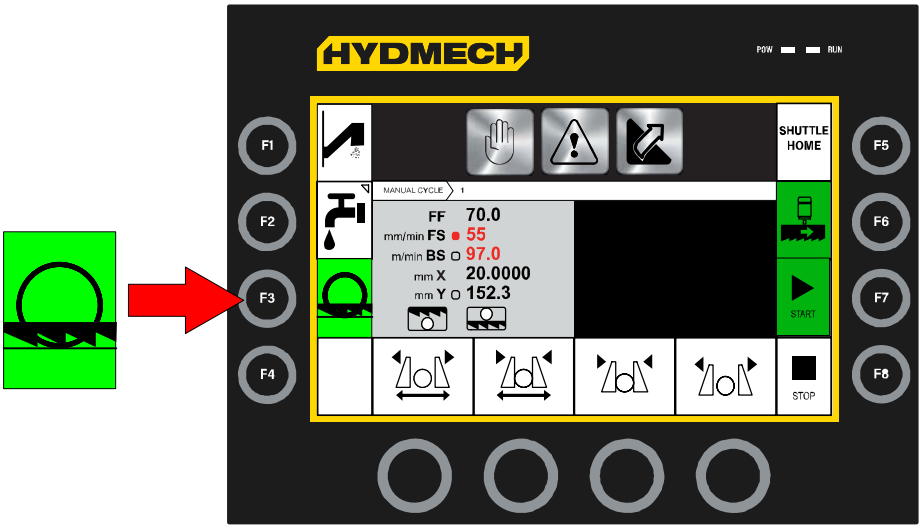

Width of cut

The machine is fitted with protections that protect the entire blade stroke leaving only the part of the blade required to make the cut itself exposed. This includes the rear (fixed) head and the front (mobile) head, as required by current standards.

The cutting width is automatically adapted with the positioning of the cutting vice on the loading side.

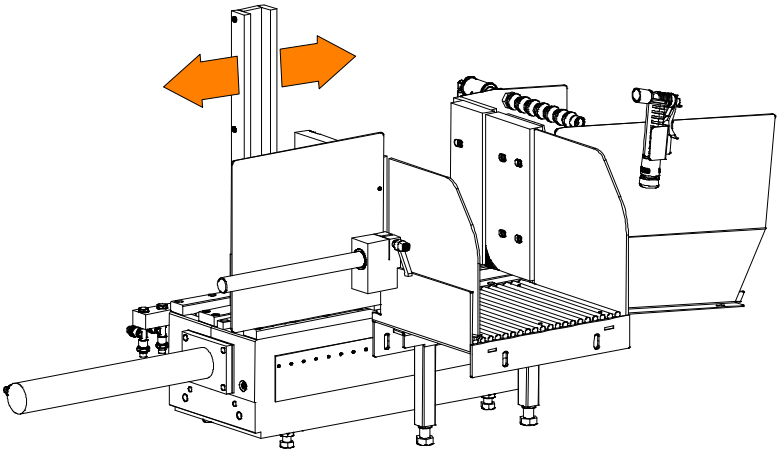

N.B. The machine is equipped with a lamp for lighting the working table and with a laser projector to aid the machine positioning under the blade vertical. These options can be selected by pressing once or more times the same key (F1) on the icon left.

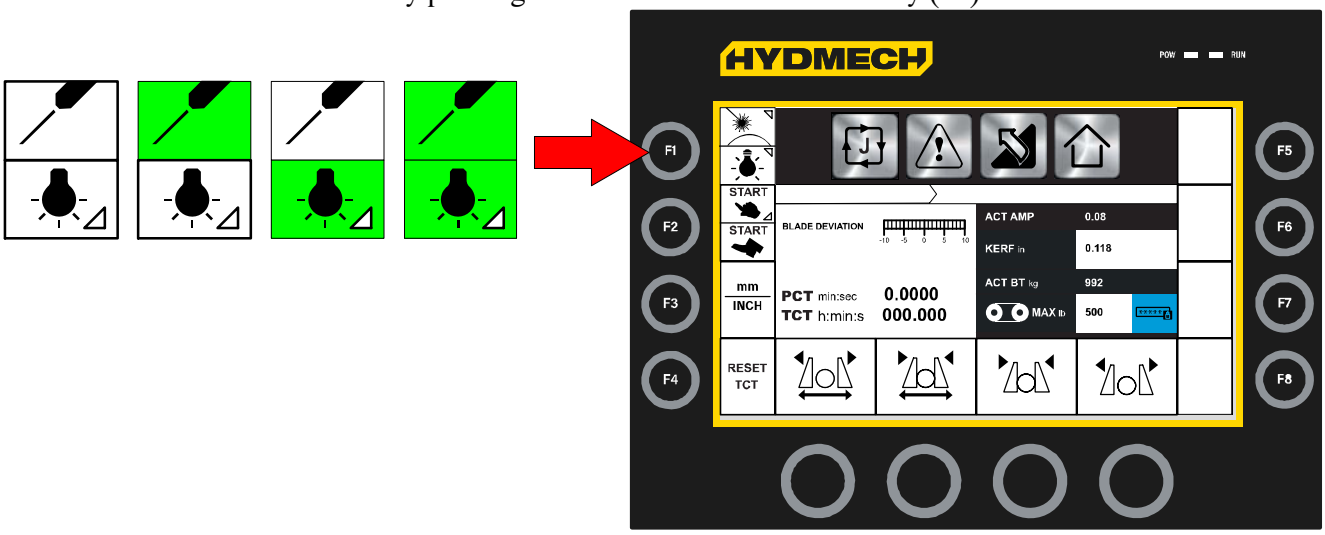

Preliminary check list for cutting operation

To guarantee complete safety during cutting cycles, the operator should work through a check list of the entire apparatus, checking:

- ▶ blade tension;
- ▶ that the work piece is properly clamped in place;
- ▶ that the blade teeth are correct for the job to be begun;
- ▶ that the speed selected is right for the kind of piece to be cut;
- ▶ that all protections are in place and correctly locked;
- ▶ the level of lubricant/coolant and that the electropump is activated;

Manual operating cycle

The operation sequence for running a manual cutting cycle:

- ▶ power up the machine by turning the main switch;

▶ Tap on the box with the on symbol on the touchscreen.

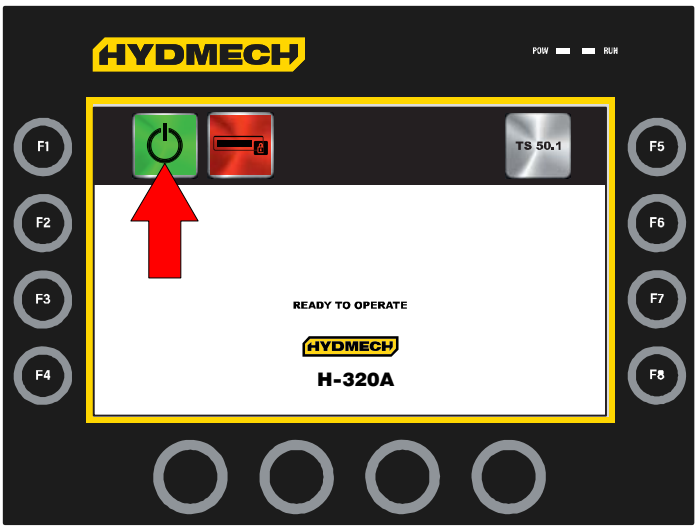

▶ press reset and release the emergency button if pressed, the head rises completely

▶ Zero the feeder by pressing the key shown in figure (F5).

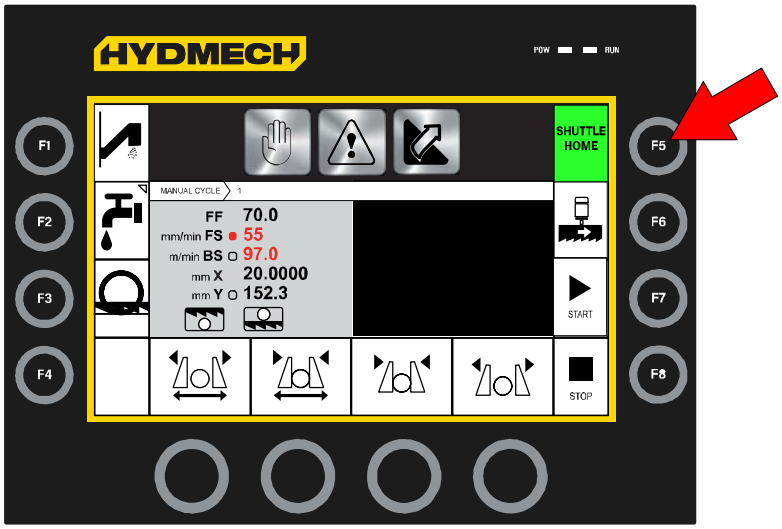

▶ Position the material inside the feeding vice.

▶ Close the feeding vice by pressing the relevant key on the console.

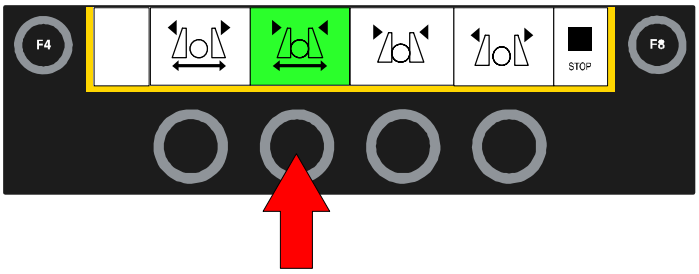

▶ Feed the material being machined and move it using the joystick. The machine is equipped with a lamp for lighting the working table and with a laser projector to aid the machine positioning under the blade vertical.

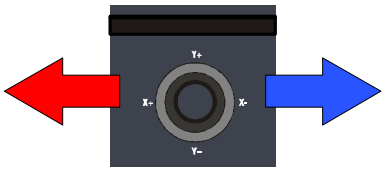

▶ Close the front vice by holding down the corresponding key from the control panel.

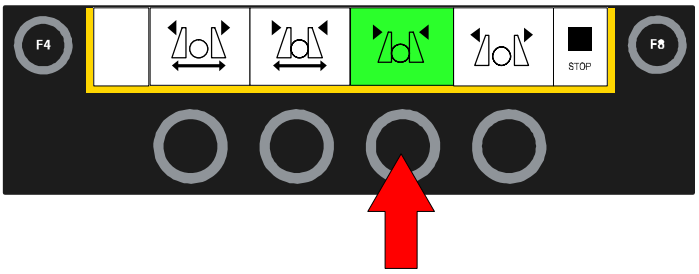

▶ Select the manual machining mode, pressing the box shown in the figure on the touch screen.

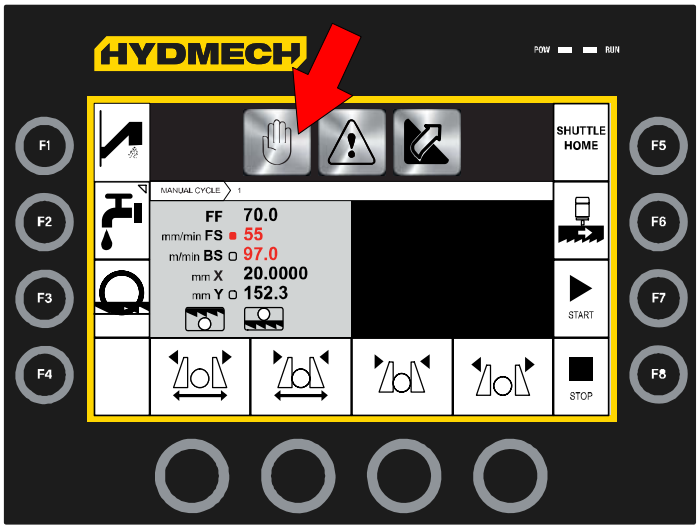

▶ Set the cutting parameters, previously shown, using the following adjusters.

▶ Set the fluid jet by pressing the button shown in the figure (F2). The box will light up to indicate that it is selected. Adjust the amount using the valves on the blade guide head. Press the button repeatedly to select the dispensing mode (automatic or manual).

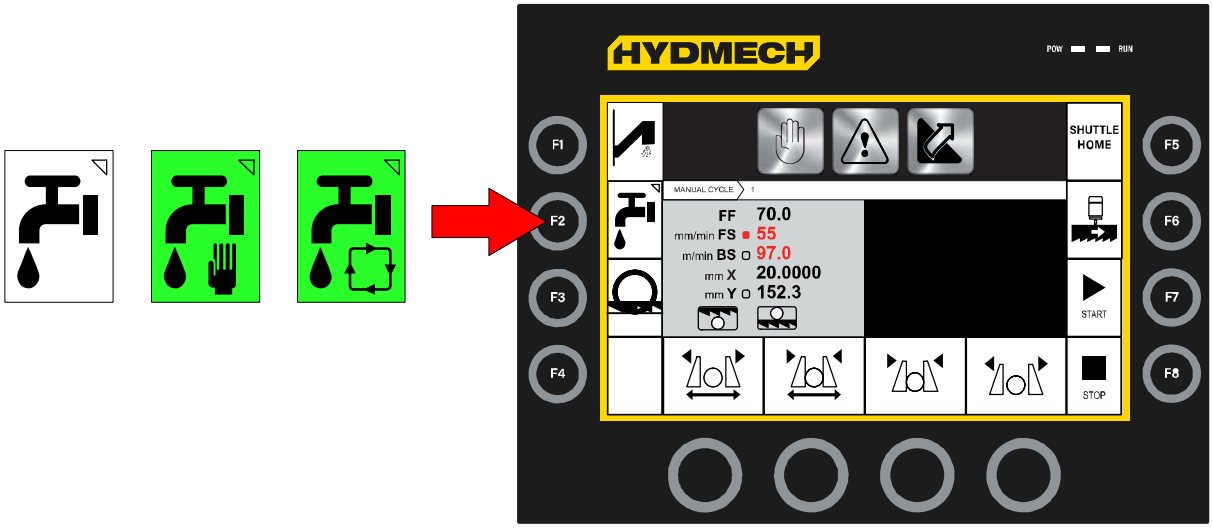

▶ Position the head at approximately 10 mm (0.39 in) from the workpiece.

▶ Press the band rotation enabling key (F6).

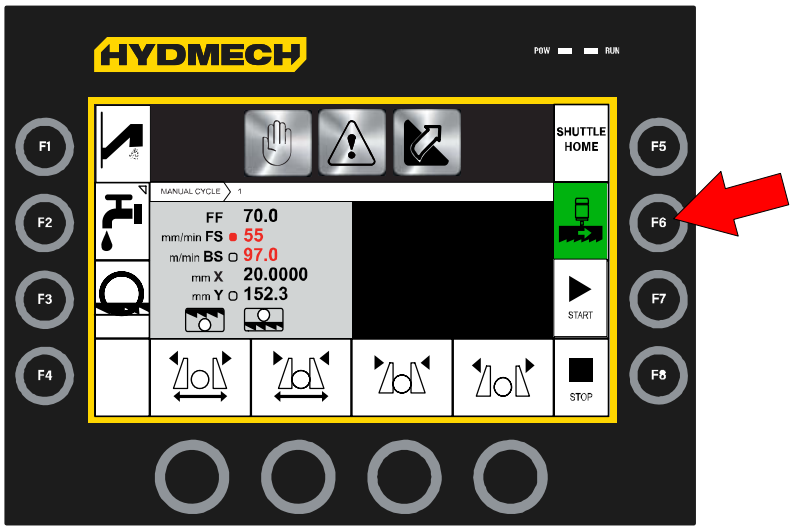

▶ Press the cycle start key (F7) to start the band rotation and the head lowering at the set speeds. The RHLS point is automatically stored in this way, as explained before.

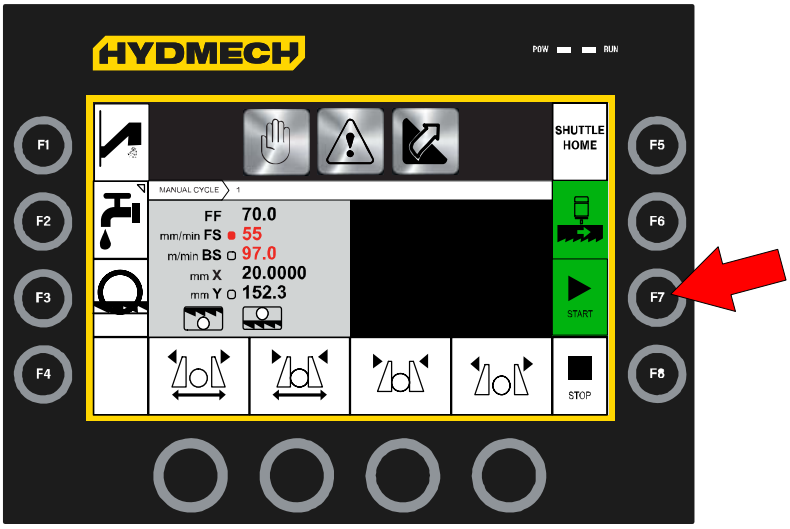

N.B. If the sawing machine is equipped with optional pedal control the cycle start control can be made from remote station. In this case it is necessary to enable the operation of the pedals, by selecting the appropriate entry in the list of options.

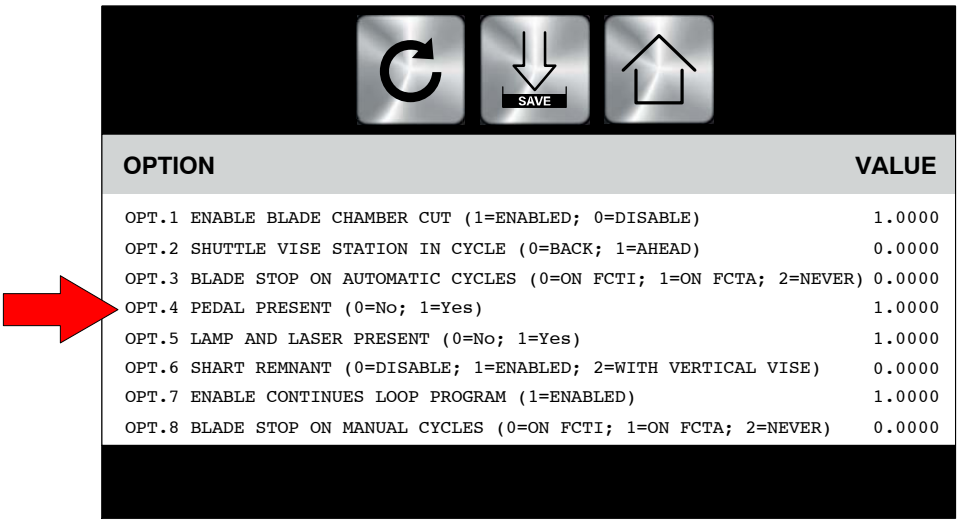

▶ Press the pedal control to start the working cycle.

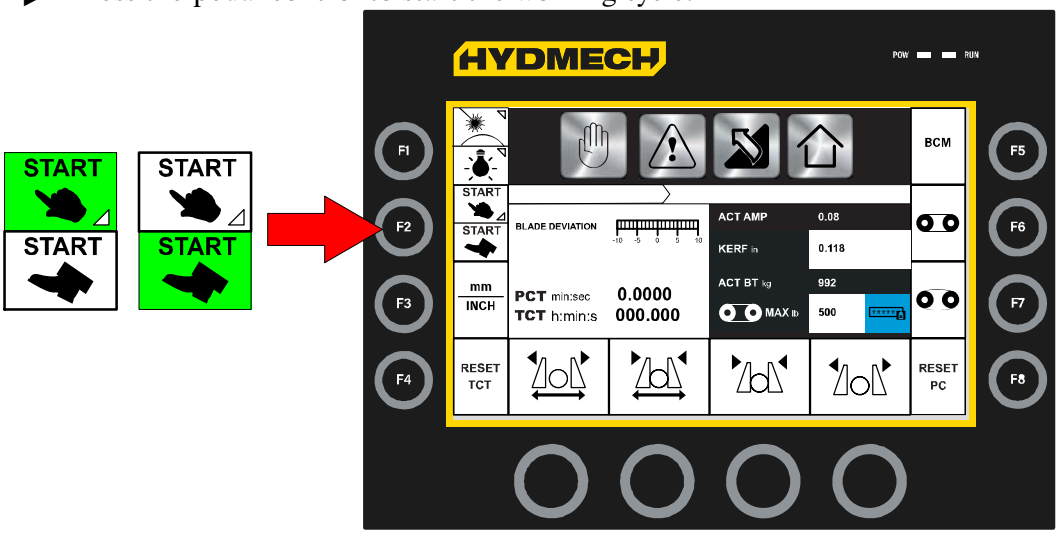

N.B. If the existing FHLS point is to be deleted now, follow the operations described above.

▶ When the head reaches the FHLS point the band stops and the head returns to the set RHLS point, ready to make a new cutting cycle.

▶ Open both vices by holding the open vices button.

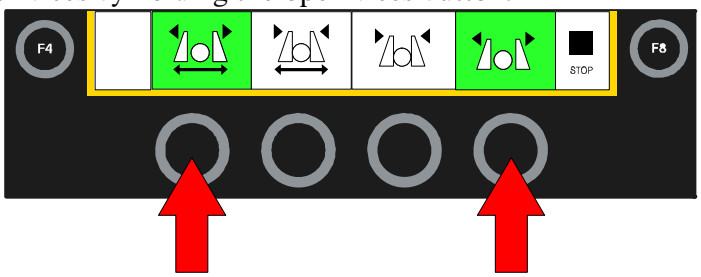

▶ Then feed the workpiece, as already explained, and finally close the front vice by holding down the corresponding key from the control panel.

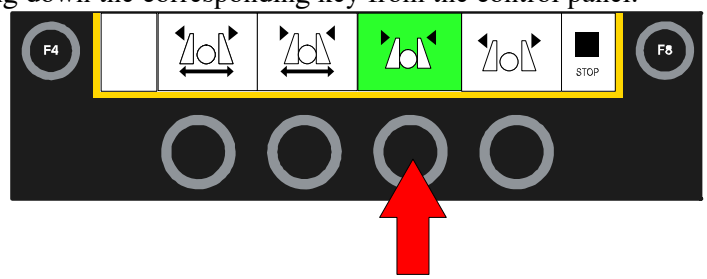

▶ Enable the band rotation by pressing the key shown in the figure (F6), the box lights on to indicate it has been selected.

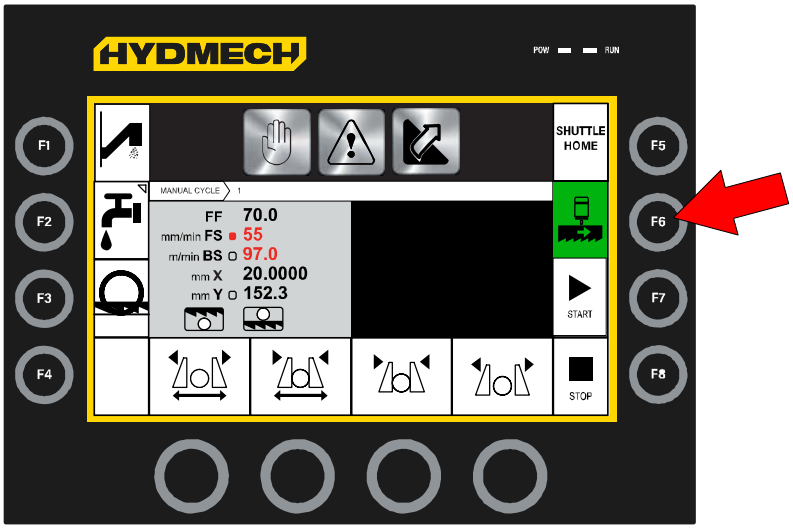

▶ Start the cutting cycle pressing the key shown in the figure (F7), the band starts turning and the machine cuts.
At the cut end, the head rises again, ready for a new machining cycle.

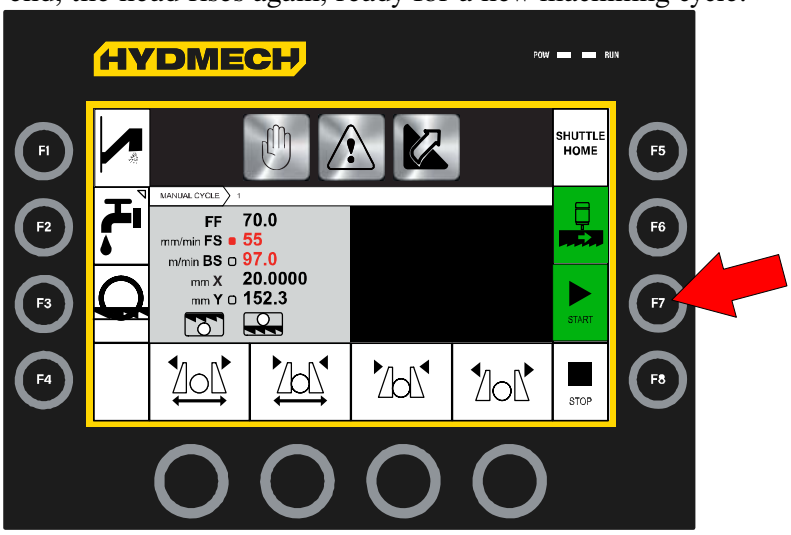

N.B. Tap on the touchscreen box shown in the figure to see problems during operation. The box will turn blue to indicate caution and red to indicate a machine alarm. See chapter 10 for a complete list of alarms.

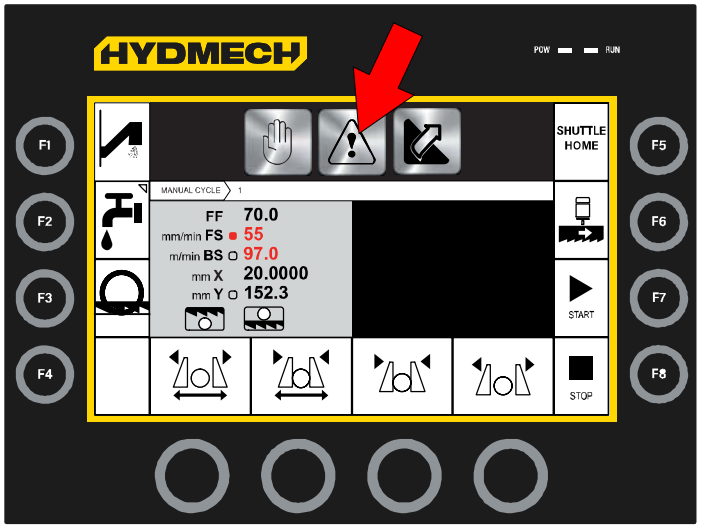

Automatic mode single job

The operation sequence for running in automatic mode and single job:

- ▶ power up the machine by turning the main switch;
- ▶ tap on the box with the on symbol on the touchscreen;

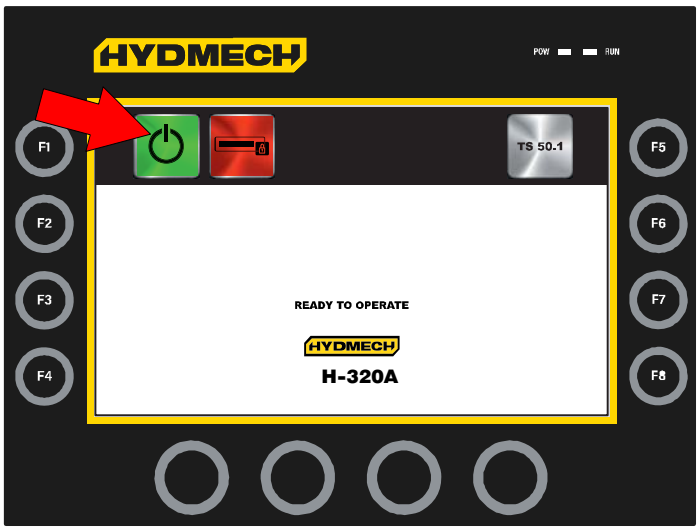

- ▶ press reset and release the emergency button if pressed, the head rises completely.
- ▶ Zero the feeder by pressing the key shown in figure (F5).

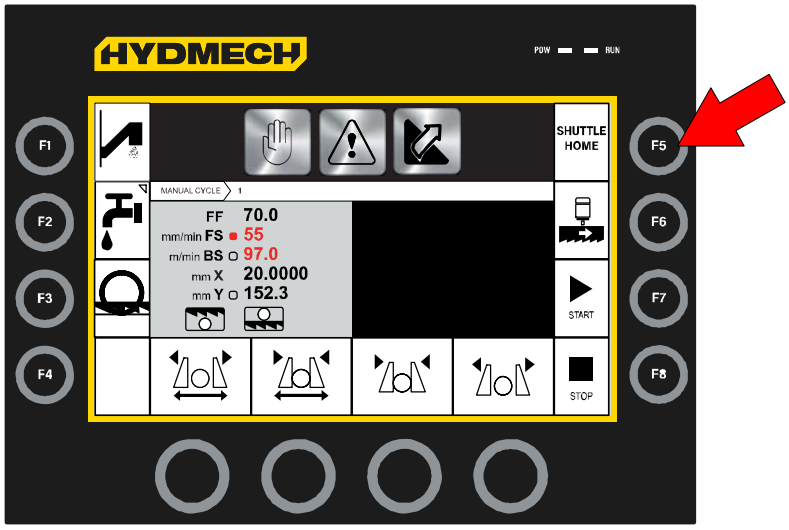

- ▶ Position the material inside the feeding vice.
- ▶ Close the feeding vice by pressing the relevant key on the console.

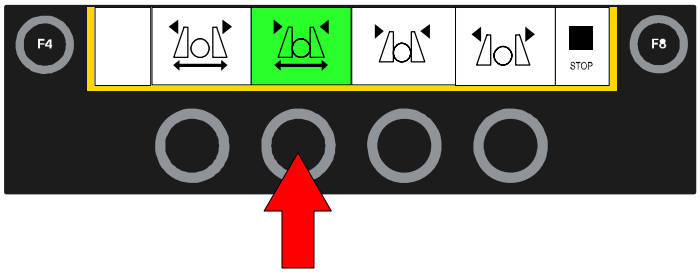

▶ Position the workpiece, moving it by the joystick.

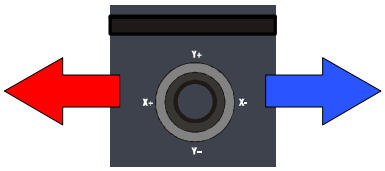

▶ Close the front vice by holding down the corresponding key from the control panel.

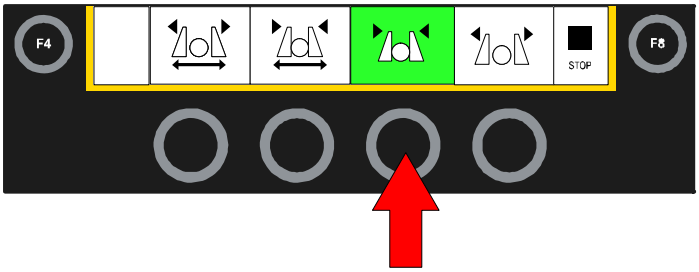

▶ Select the automatic machining mode with single program, pressing the box shown in the figure on the touch screen.

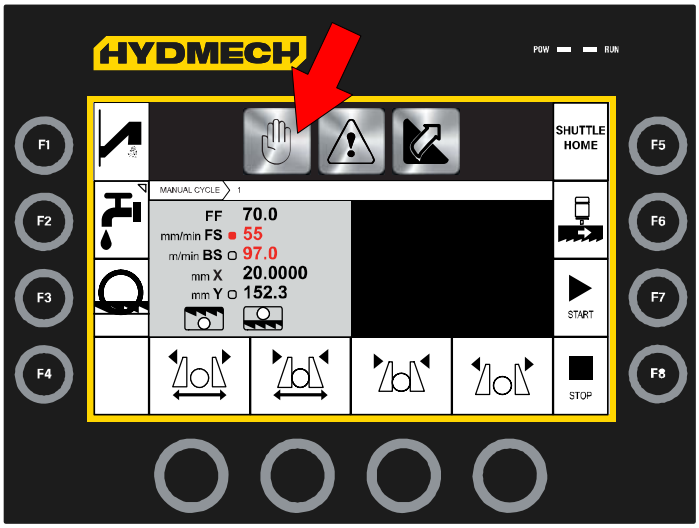

▶ Set the wished length and the wished number of cuts pressing the boxes shown in the figure and entering the values on the keypad that pops up automatically.

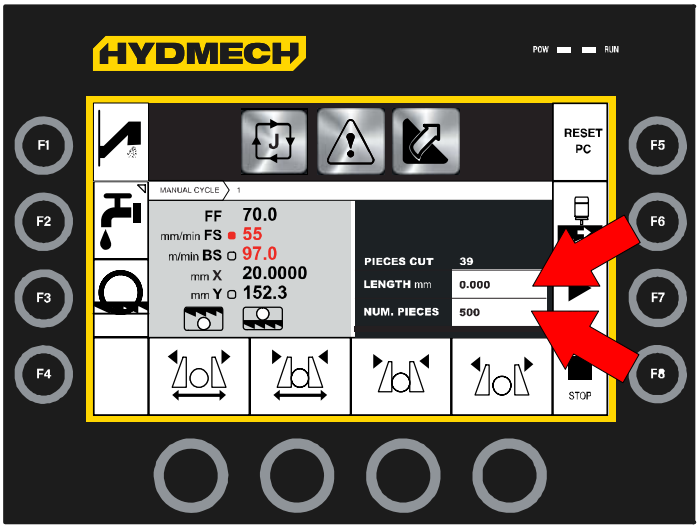

▶ Set the cutting parameters, previously shown, using the following adjusters.

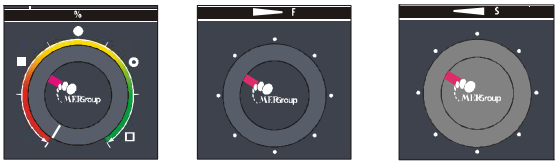

▶ Set the fluid jet by pressing the button shown in the figure (F2). The box will light up to indicate that it is selected. Adjust the amount using the valves on the blade guide head. Press the button repeatedly to select the dispensing mode (automatic or manual).

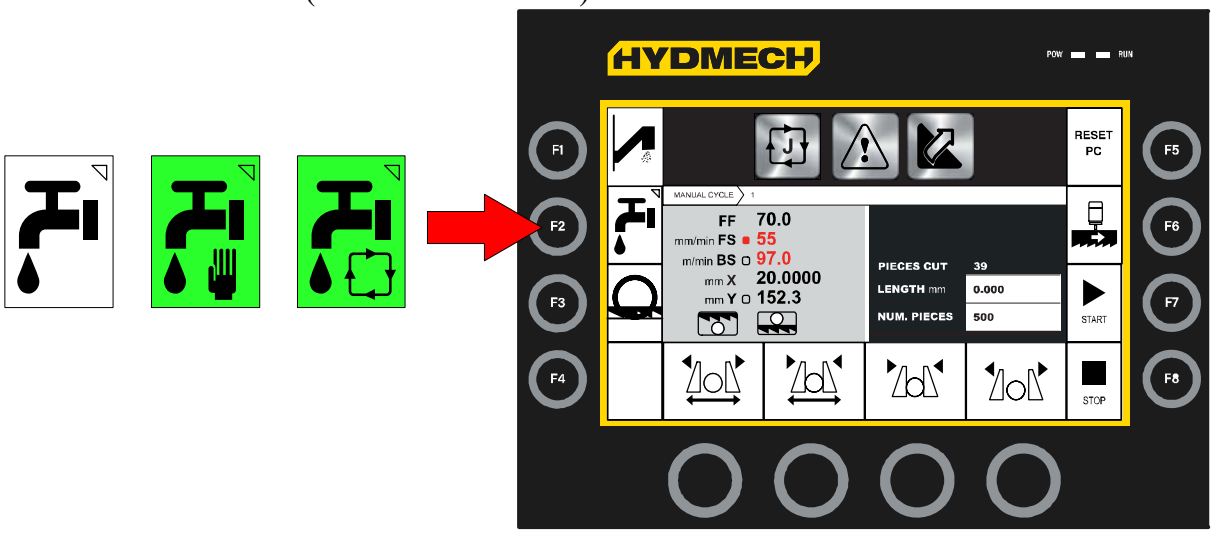

▶ Position the head at approximately 10 mm (0.39 in) from the workpiece.
▶ Press the band rotation enabling key (F6).

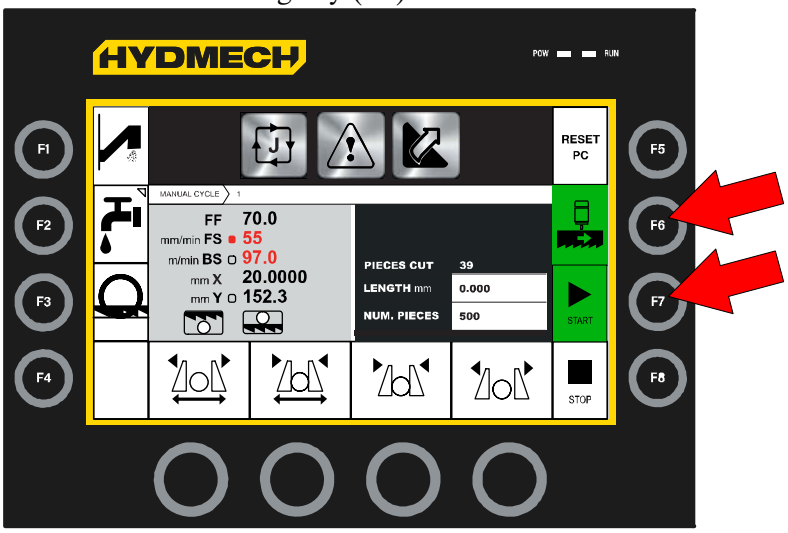

▶ Press the cycle start key (F7) to start the band rotation and the head lowering at the set speeds. The RHLS point is automatically stored in this way, as explained before.

N.B. If the sawing machine is equipped with optional pedal control the cycle start control can be made from remote station. In this case it is necessary to enable

the operation of the pedals, by selecting the appropriate entry in the list of options.

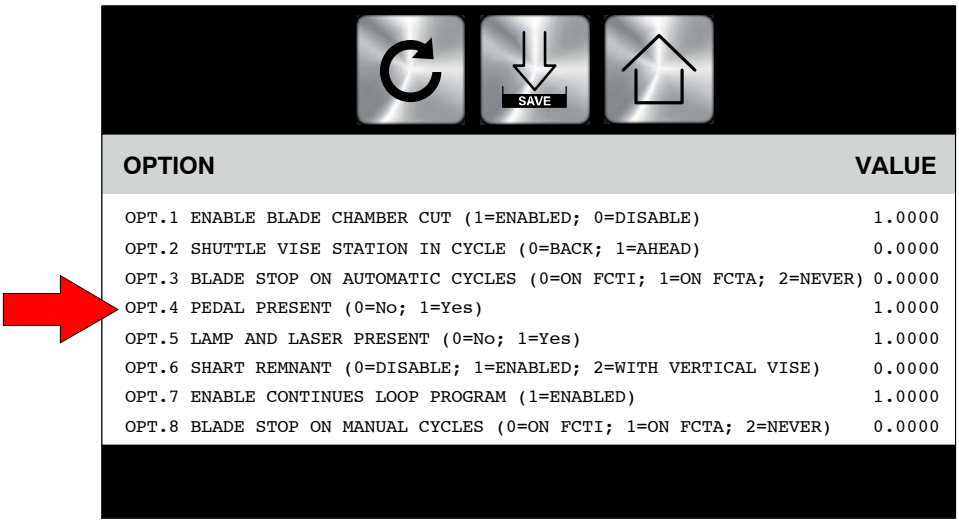

▶ Press the pedal control to start the working cycle.

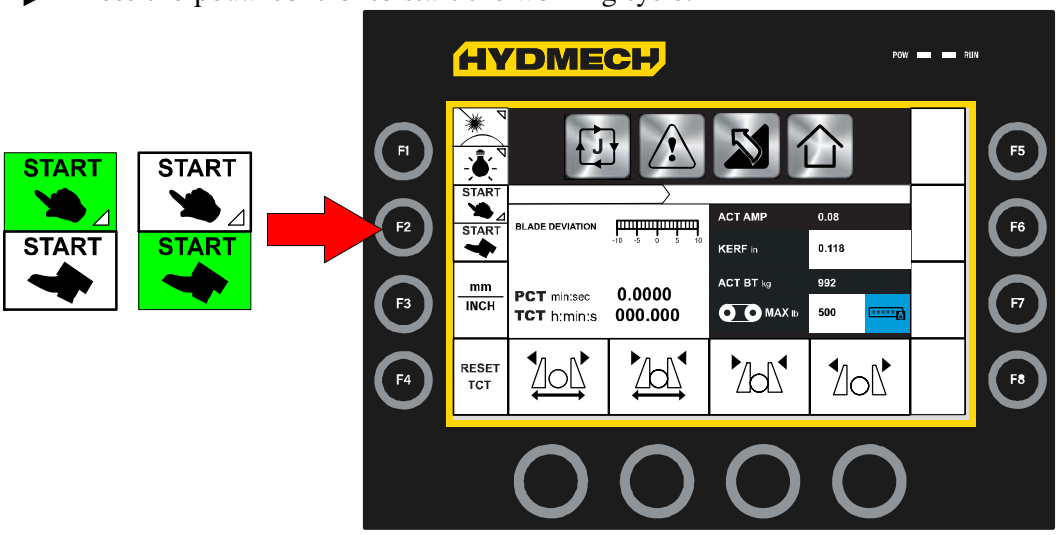

N.B. If the existing FHLS point is to be deleted now, follow the operations described above.

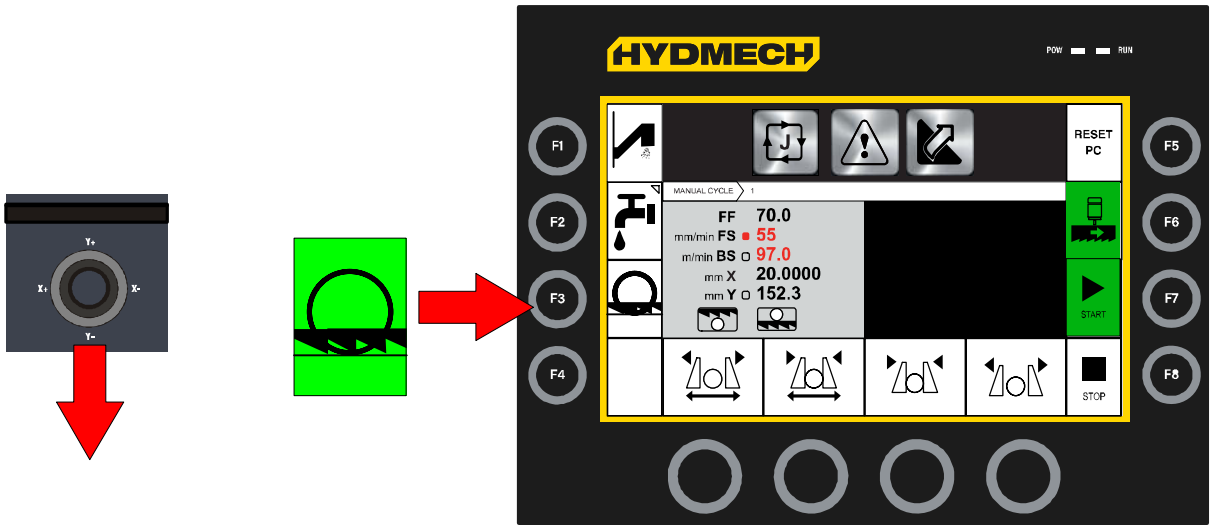

The sawing machine makes the programmed cuts. At the end, the head rises again and the band motor stops.

Automatic mode queue

The operation sequence for running in automatic mode queue:

- ▶ power up the machine by turning the main switch;
- ▶ tap on the box with the on symbol on the touchscreen;

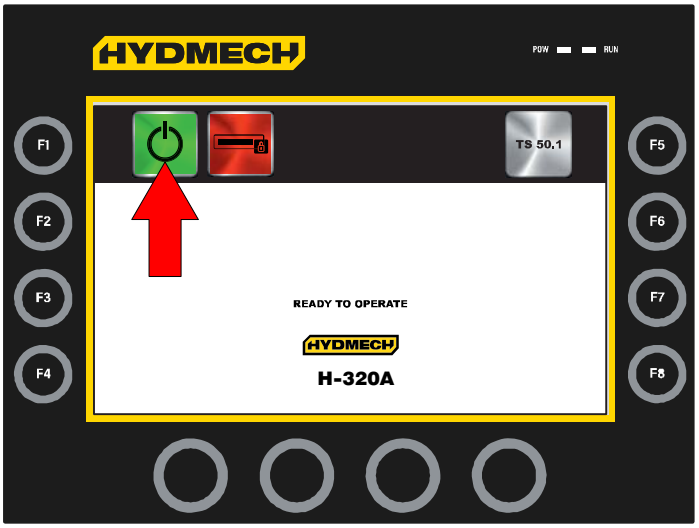

- ▶ press reset and release the emergency mushroom button if pressed, the head rises completely.

N.B. If previous machinings have been made already and the feeder has not been zeroed, zero it pressing the key shown in the figure.

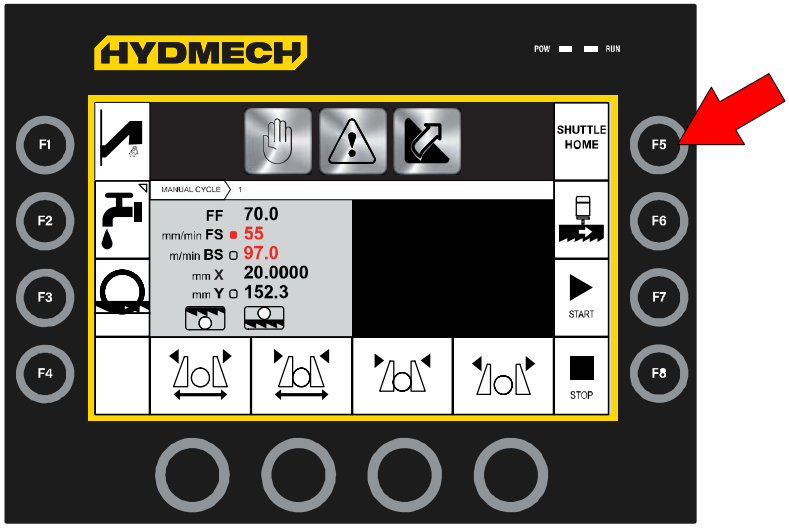

- ▶ Position the material inside the feeding vice.

▶ Close the feeding vice by pressing the relevant key on the console.

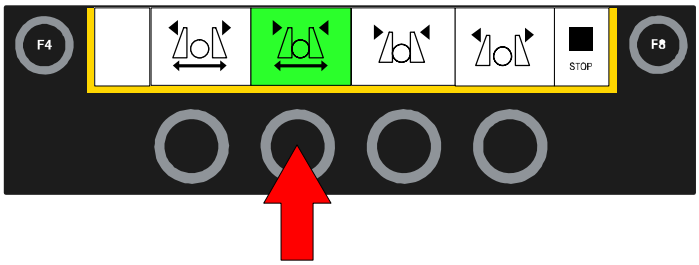

▶ Position the workpiece, moving it by the joystick.

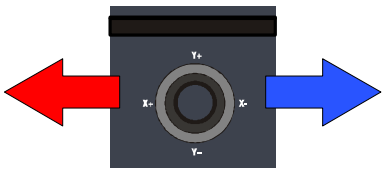

▶ Close the front vice by holding down the corresponding key from the control panel.

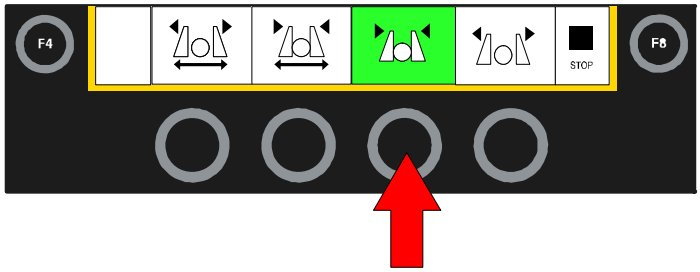

▶ Select the automatic machining mode with continuous program, pressing the box shown in the figure on the touch screen.

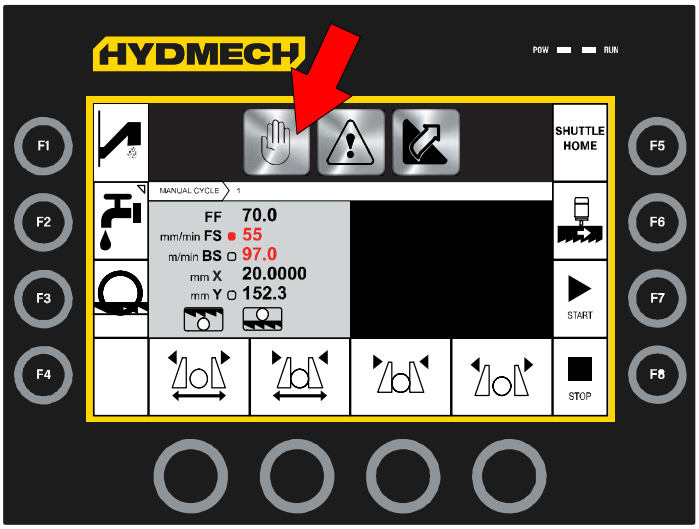

▶ Press the RUN/PROG key to access the programming page for the automatic operation with continuous program.

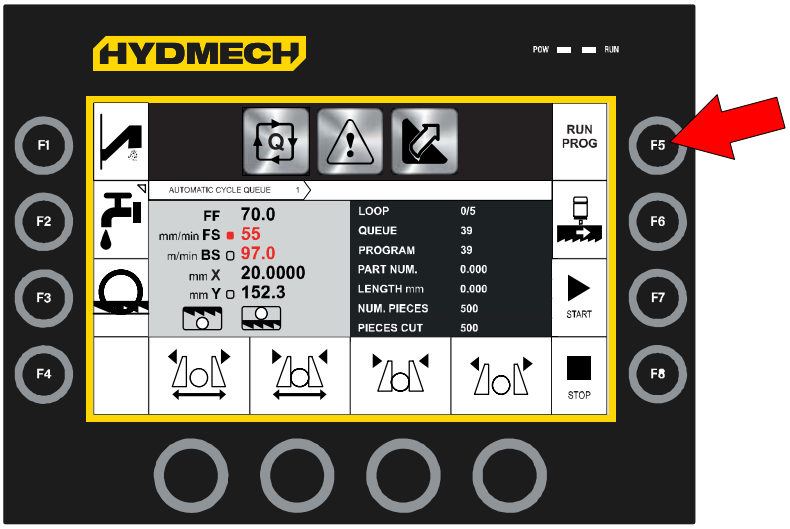

▶ The display shows the following screen listing all programs (max. 20) of the queue selected. Press the program number to select the one to be set.

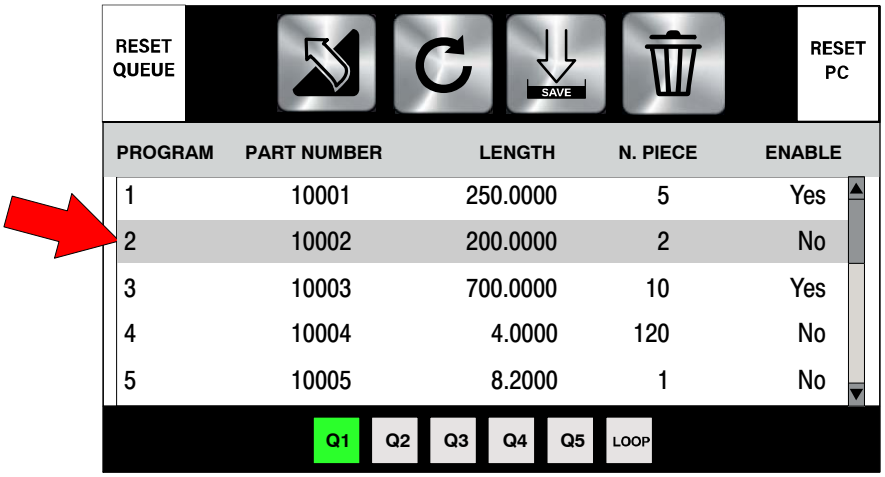

▶ Press to edit all values of “Part Number” (company identification code), “Length” (piece length), and “Nr. Pieces” (number of pieces) using the keypad.

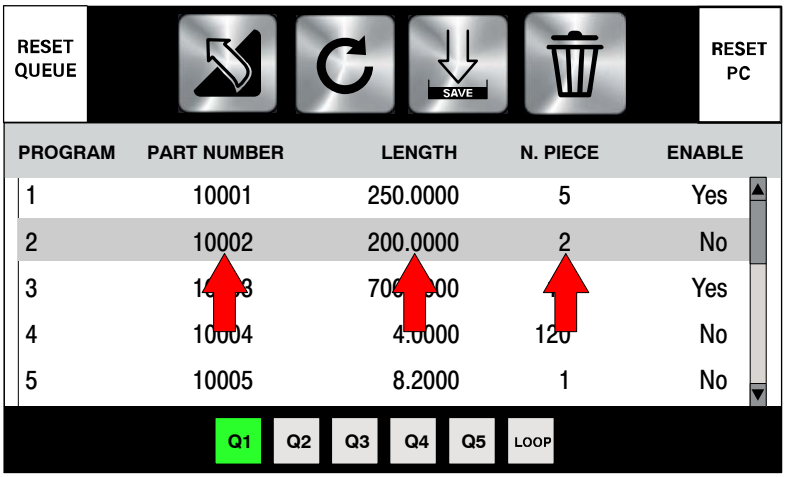

▶ In the end choose to activate or deactivate the selected by “Enable” (Yes / No).

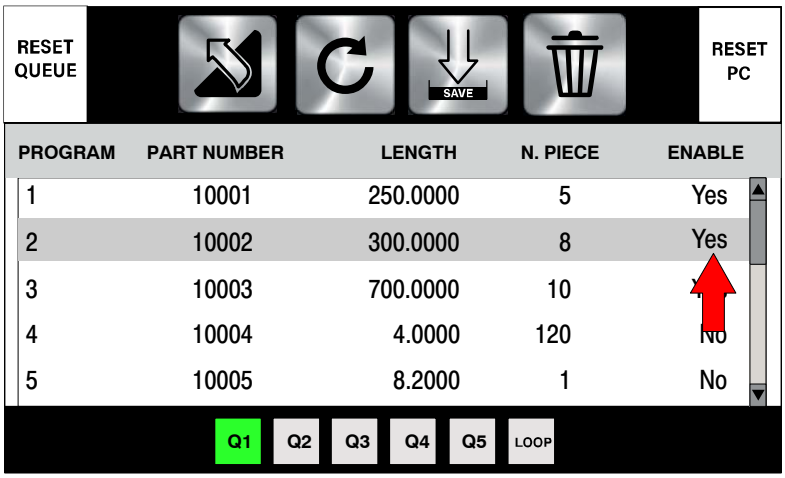

N.B. Press the F1 key to zero the program queue.
Press the F5 key to zero the piece number.
Before returning to the machining screen, press the data saving key and then the green arrow shown in the figure.

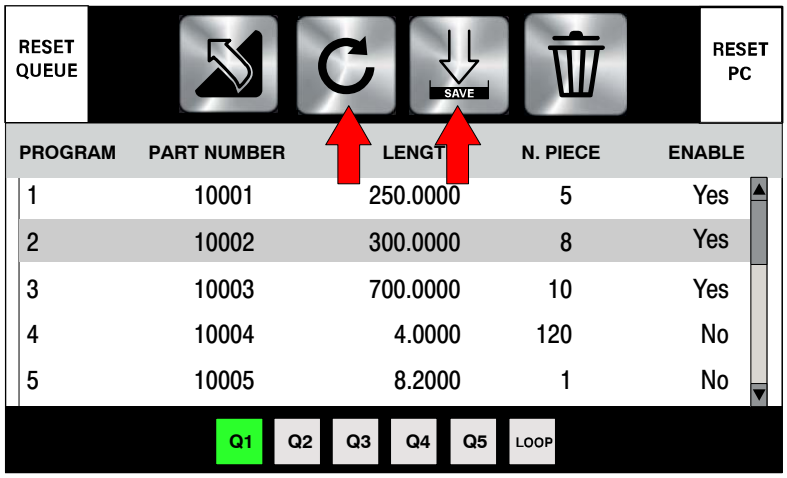

▶ Set the fluid jet by pressing the button shown in the figure. The box will light up to indicate that it is selected. Adjust the amount using the valves on the blade guide head. Press the button repeatedly to select the dispensing mode (automatic or manual).

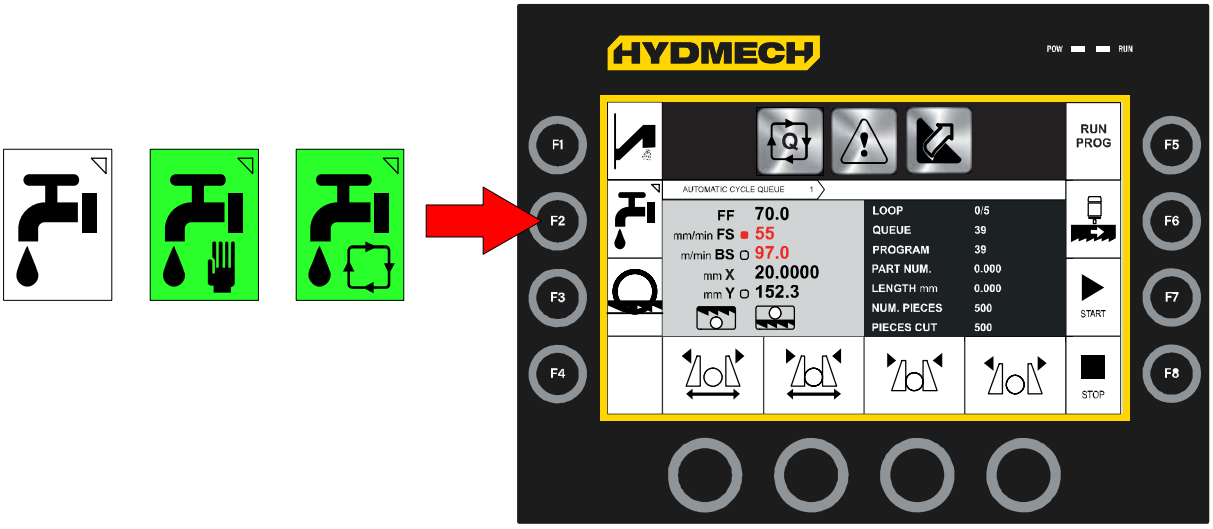

▶ Set the cutting parameters, previously shown, using the following adjusters.

▶ Position the head at about 10 mm (0.39 in) from the material being machined, moving it with the joystick.

▶ Press the band rotation enabling key (F6).

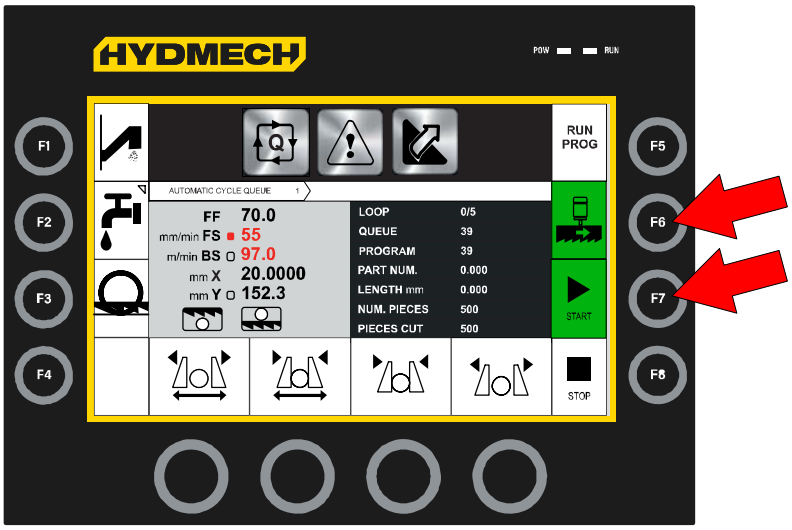

▶ Press the F7 cycle start key to start the band rotation and the head lowering. The RHLS point is automatically stored in this way, as explained before. At the end, the band stops and the head rises again.

N.B. If the sawing machine is equipped with optional pedal control the cycle start control can be made from remote station. In this case it is necessary to enable the operation of the pedals, by selecting the appropriate entry in the list of op-

tions.

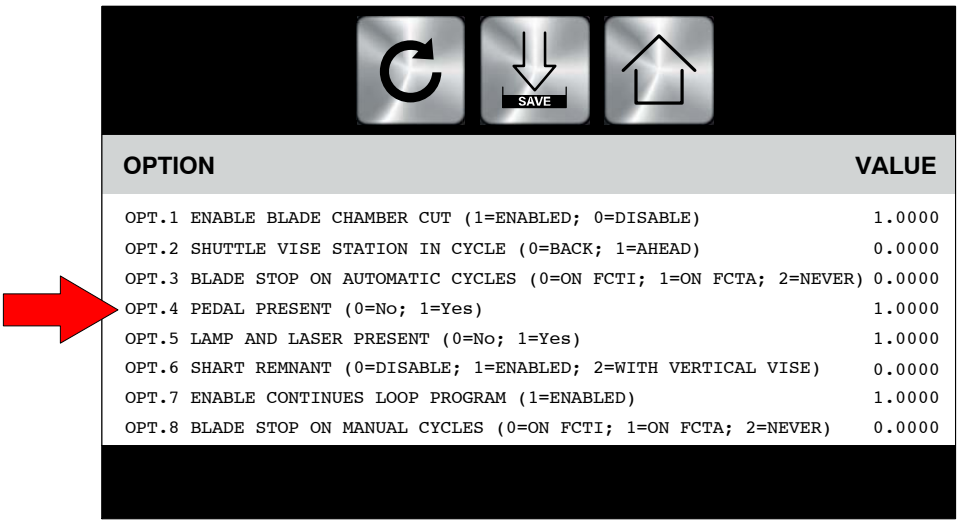

▶ Press the pedal control to start the working cycle.

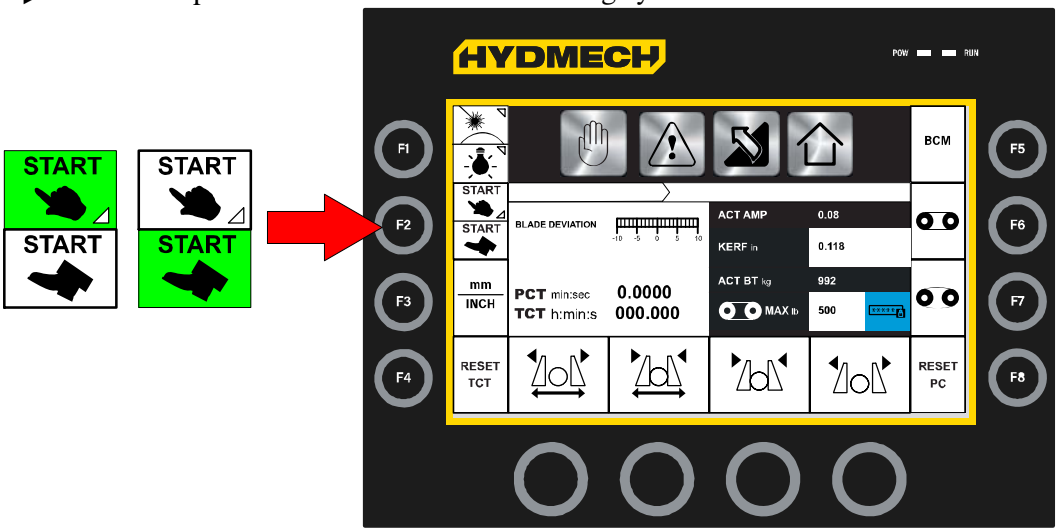

N.B. If the existing FHLS point is to be deleted now, follow the operations described above.

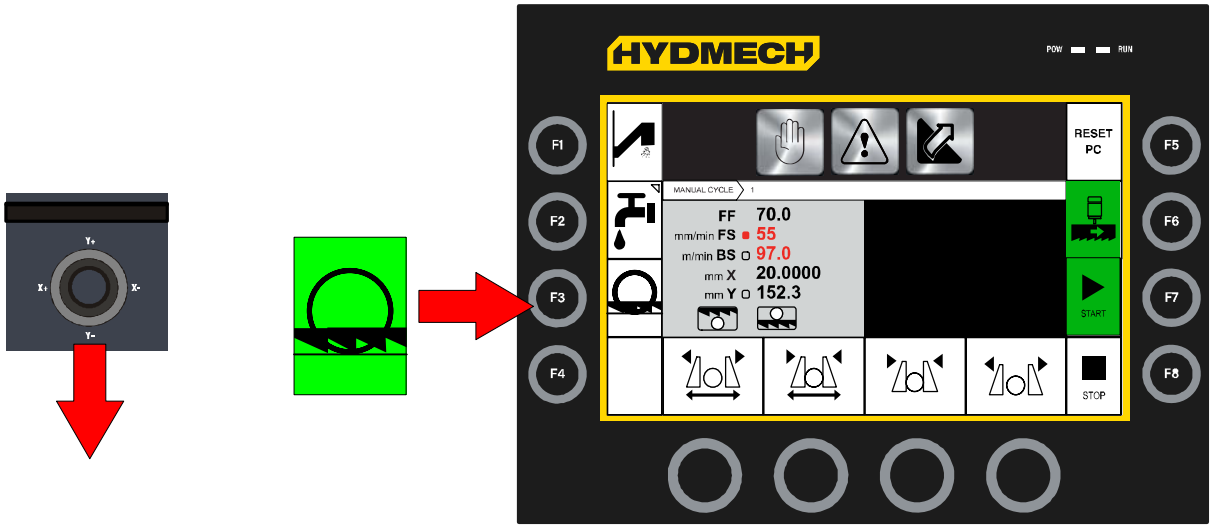

The sawing machine then feeds new material performing all the program cuts and continues with the set sequence. If the machining cycle must be stopped, press F8 Cycle Stop. To start it again, press F7 Cycle Start.

Diagrams, exploded views and replace– ment parts

6

This chapter contains functional diagrams and exploded views of the **H–320A**. This document is intended to help in identifying the location of the various components making up the machine, giving information useful in carrying out repair and maintenance operations; This chapter will also enable the user to order replacement parts with no risk of misunderstanding, as all parts are given codes.

APSL3 drive for step motors

FOREWORD

This drive enables to control a stepper motor using a direction–step pulse train. By connecting the input ENABLE with +15 V dc/+24 V dc the drive will be enabled (current in the motor = 12 A) with following power supply to the stepper motor, after sending at least 1 step, disconnecting or connecting with 0 V the drive will be disabled and the motor will be stopped, without supplying any torque.
The acceleration/deceleration ramp, the current and the step division can be adjusted using the dip switches and the trimmers on the card (see tables).

CHARACTERISTICS

CUT	APSL3
VDC NOM. [V]	40–80
VDC MAX. [V]	90
VDC MIN. [V]	30
I MAX. [A]	12
I MIN. [A]	1
I LÉPÉS [A]	0.5
Operating temperature [°C]	0–55

MEANING OF THE PARAMETERS IN THE TABLE

- **Vdc nom:** Nominal voltage at which the drive can be powered.
- **Vdc max:** Maximum voltage at which the drive can operate, where this limit is exceeded the protection intervenes, inhibiting the operation of the drive itself.
- **Vdc min:** Minimum voltage at which the drive can operate. When the voltage drops below this limit, the protection intervenes, inhibiting the operation of the drive itself.
- **I max:** Maximum value for the phase current.
- **I min:** Minimum value for the phase current.
- **I step:** Difference between the settable current values.

- **Operating temperature:** Forced ventilation is necessary for currents exceeding 6A.

SCHEMATIC CONFIGURATION OF INPUTS / OUTPUTS

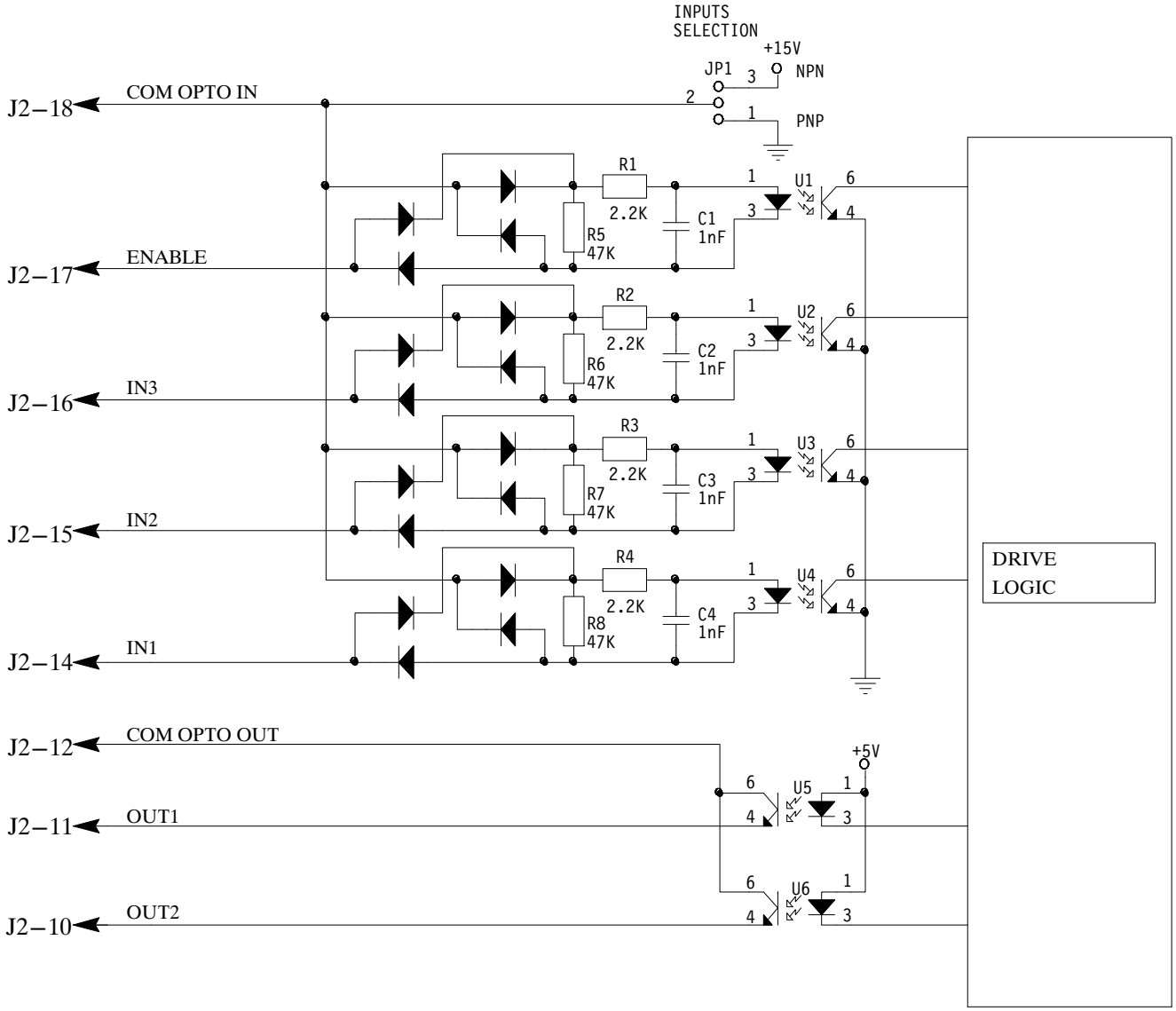

LAYOUT OF APSL3 DRIVE COMPONENTS

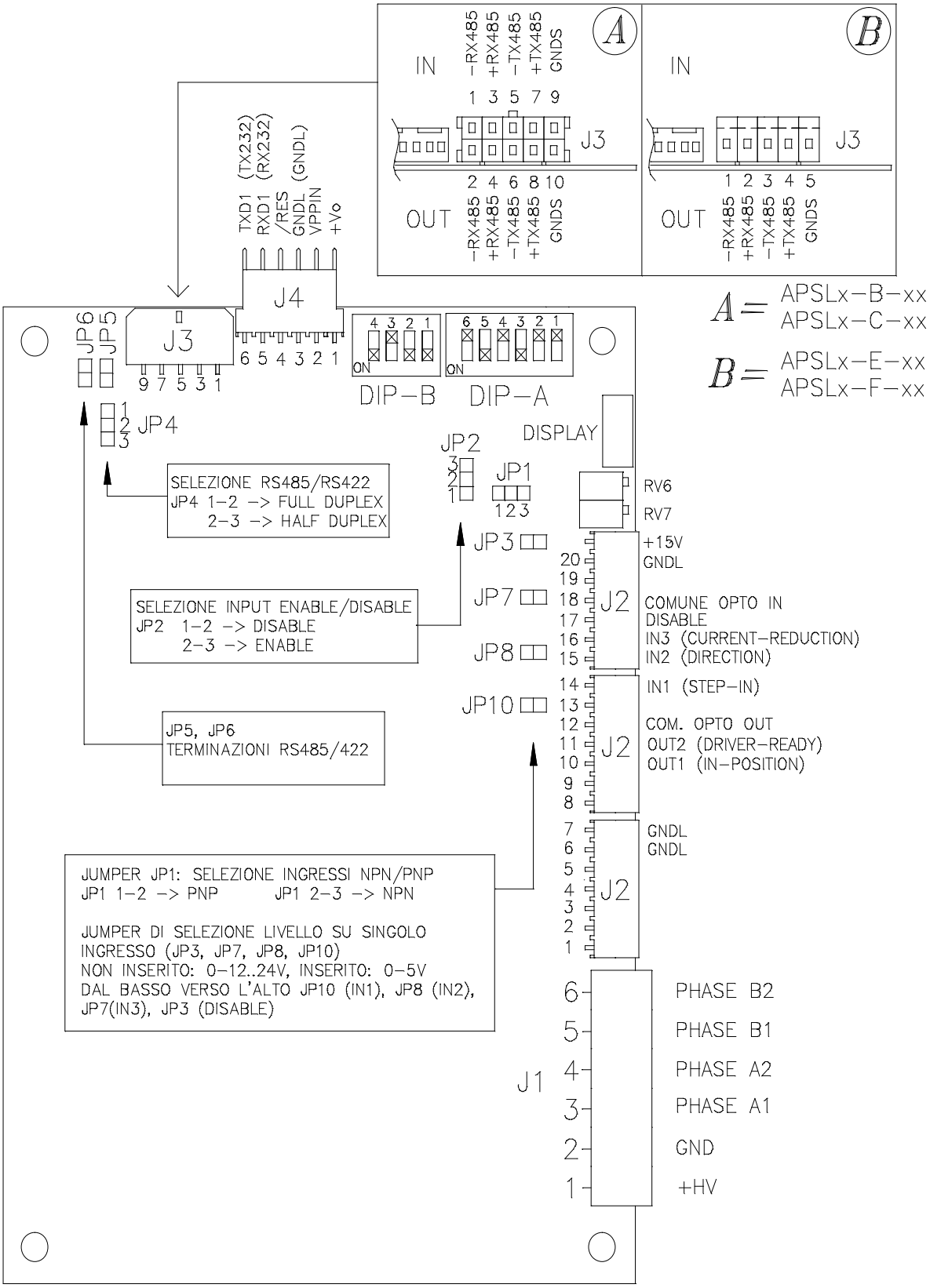

How to read the wiring diagrams

With the introduction of the new standardised wiring diagrams, the following gives an illustration of the way in which they have been drawn up.

Each sheet of the project contains a box which gives the following information:

The numbers indicate the columns into which the entire drawing is divided

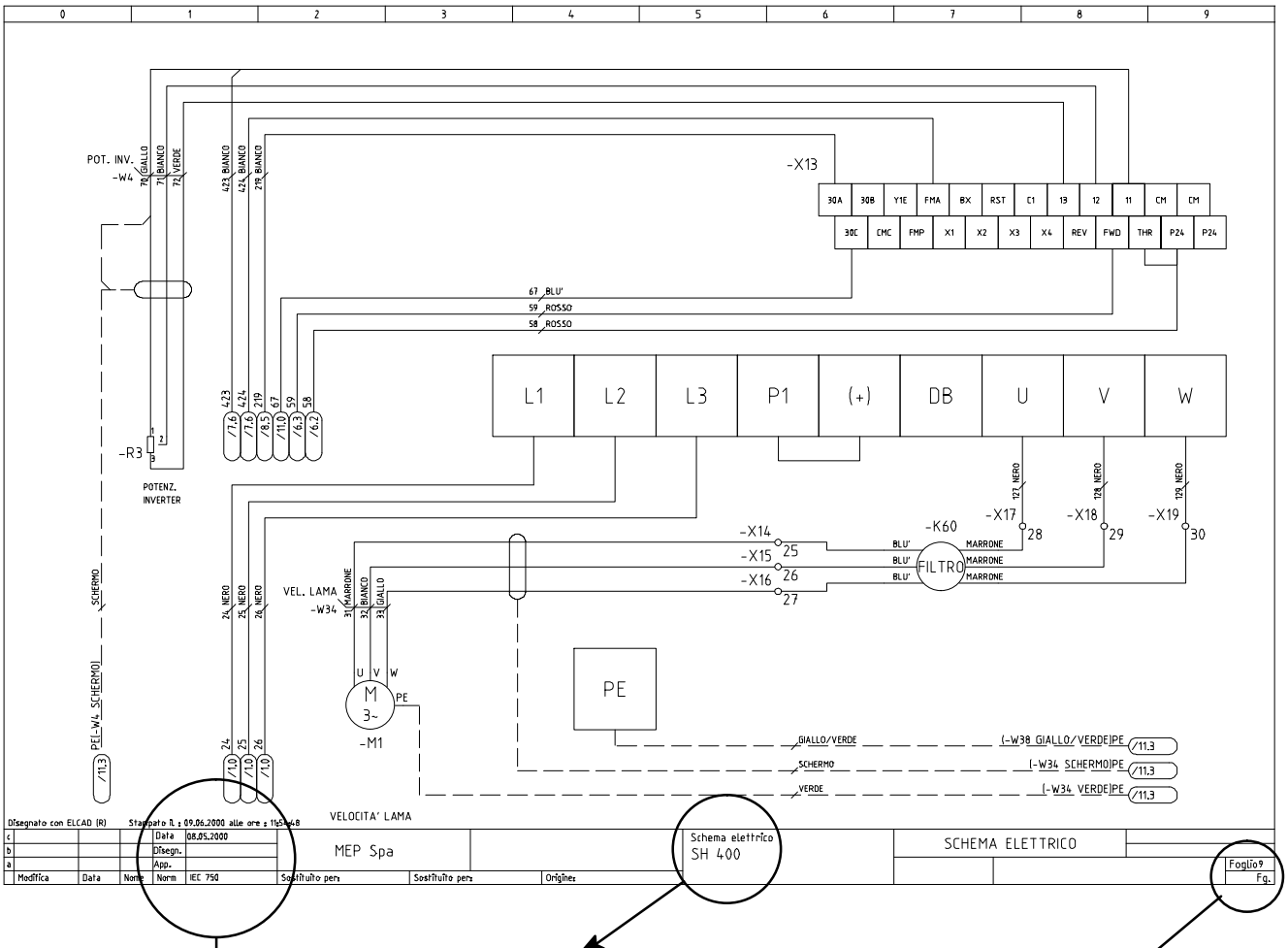

Schema elettrico
SH 400

Indications of the model of machine

Data	08.05.2000
Disegn.	MARIO ROSSI
App.	
Norm	IEC 750

Indications of the date production started

Identification of the designer

Identification of the Reference Standard

Foglio9	
	Fg.

Indication of the page number

Each component in the wiring diagram is identified by a unique alphanumeric identification code, in compliance with regulations:

The wire is identified by the code –W4

This symbol identifies the wire with its relative number and colour

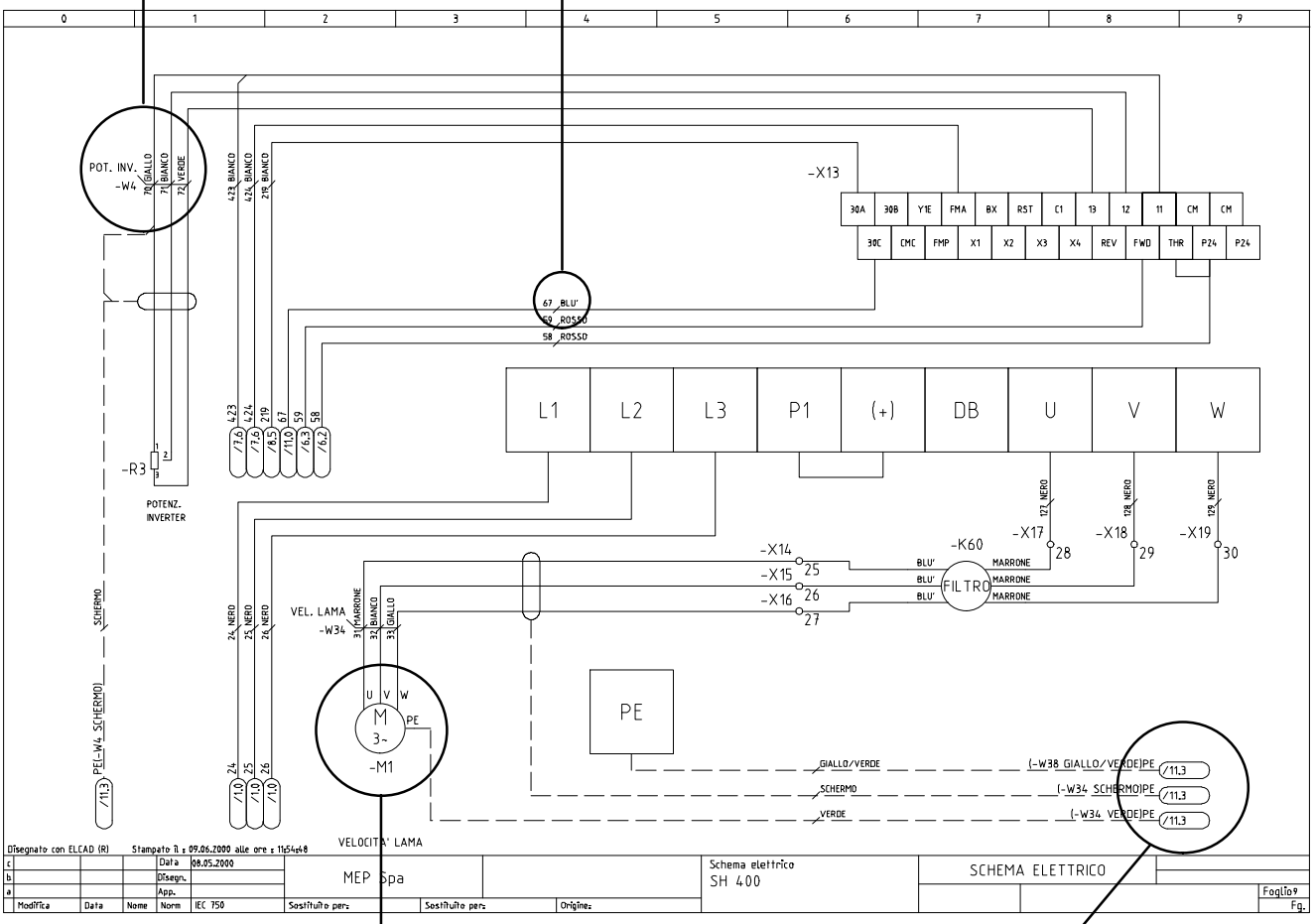

The motor is identified by the code –M1

These symbols, known as potentials, are used to provide page references: the first number indicates the page to be referred to, the second number, after the dot, identifies the column on that page; example /11.8 indicates that the wire continues on page no. 11 in column 8

The pages following the wiring diagrams contain the following lists:

1. components list (list of all components) and terminals list (list of all the terminals) with the following information:
   - in–house article code;
   - identification code;
   - reference, no. of the page and column on which it can be found;
   - description;
   - manufacturer.

ART. COD.	ID	PRES. REF	DESCRIPTION	MANUFACTURER
022.2151	–B1	/5.2	STRAIN GAUGE	DELTATEC

2. wires list (list of all wires) with the following information:
   - in−house article code;
   - identification code;
   - description;
   - section of wire (mm2);
   - colour of wire;
   - start: indicates the component (identification code and contact number) at which the wire starts;
   - end: indicates the component (identification code and contact number) at which the wire ends; e.g.

CODE	CABLE	DESCRIPTION	SECTION	NO.	COLOUR	START		END	
022.0141	–W7	RESET+EMER-GENZA	0.50	317	BIANCO	–S3	4	–K10	14

In this example, wire no. 317 white, identified as −W7, starts from contact no. 4 on component −S3, and ends at contact no. 14 on component −K10.
Enclosed below is Appendix D2 to European Standard EN 60204−1

D2–Letter codes used to designate the type of component

LETTER	TYPE OF COMPONENT	EXAMPLES	IDENTIFICATION OF THE APPLIANCE
A	Complex units	Laser Maser Regulator	A
B	Transducers converting a non electrical signal to an electrical signal and vice versa	Transistor amplifier IC amplifier Magnetic amplifier Valve amplifier Printed circuit board Drawer Rack	AD AJ AM AV AP AT AR
C	Capacitors		C
D	Binary operators, timing devices, storage devices	Digital integrated circuits and devices: Delay line Bistable element Monostable element Recorder Magnetic memory Tape or disk recorder	D
E	Various materials	Devices not specified in this table	E
F	Protective Devices	Lightning protectors Arrestors	F
		Instant action current threshold protector Delayed action current threshold protector Instant and delayed action current threshold protector Fuse Voltage threshold protector	FA FR FS FU FV
G	Generators, feeders	Rotating generators Crystal oscillators	G
		Accumulator battery Rotating or static frequency converter Power feeder	GB GF GS
H	Signaling Devices	Buzzer Optical signal, indicator light device	HA HL
J			

LETTER	TYPE OF COMPONENT	EXAMPLES	IDENTIFICATION OF THE APPLIANCE
K	Relays, Contactors	Instant all or nothing relays or instant contactors Bistable relays or interdependent contactors (All or nothing contactors with mechanical contact or permanent magnet etc.) Contactors Polarised relays Reed relays All or nothing timed relays (timers)	KA KL KM KP KR KT
L	Inductors, reactors	Inductor Stop coil Reactor	L
M	Motors		M
N	Analogue intgrated circuits	Operational amplifiers Hybrid analog/digital appliances	N
P	Measurement equipment, test devices	Indicator, recorder and integrator measurement devices Signal generators	P
Q	Power circuit switching appliances	Automatic switch Engine saver switch Knife switch	QF QM QS
R	Resistors	Fixed or variable resistor (rheostat)	R
S	Command or control devices	Selector or switch Button (including electronic proximity switch) Numerical all or nothing sensors (single step) of mechanical and electronic type: – Liquid level sensor –Pressure sensor Position sensor (including proximity) –Rotation sensor –Temperature probe	SA SB SL SP SQ SR ST
T	Transformers	Current transformer Control circuit supply transformer Power transformer Magnetic stabiliser Voltage transformer	TA TC TM TS TV
U	Modulators, converters	Discriminator Demodulator Frequency converter Coder Converter Inverter Telegraphic repeater	U

LETTER	TYPE OF COMPONENT	EXAMPLES	IDENTIFICATION OF THE APPLIANCE
V	Electronic pipes, semiconductors	Electronic pipe Gas discharge pipe Diode Transistor Thyristor	V
W	Transmission lines, wave guides, antennas	Conductor Cable Bar Wave guide Wave guide directional coupler Dipole Parabolic antenna	W
X	Terminals, sockets, plugs	Connector bar Test plug Plug Socket Terminal connector band	XB XJ XP XS XT
Y	Electrically operated mechanical appliances	Electromagnet Electromagnetic brake Electromagnetic clutch Magnetic table spindle Electromagnetic valve	YA YB YC YH YV
Z	Transformers, impedence adapters, equalizers, band limiters	Line equalizer Compresser Crystal filter	Z

LISTA FOGLI \ INDEX

Note :

REV.	MODIFICA	DATA	FIRME
R.0.3	BOM review	06/11/2018	Solfanelli
R0.2.	Added RSE2 safety module	24/10/2018	Solfanelli
R0.1	Con Cablaggio per inverter MITSUBISHI FR-D700	03/09/2018	Solfanelli

Dis. N. H320A/240ULCSA/5118
CAD SPAC
File H320A\1.dwg
Data 19/12/2018

Impianto/Plant
Schematic H-320A_240/60Hz
PLC HW 1

Denominazione/Title
INDICE CONTENUTI
Content Index

Ordine/Requisition
Commessa/Order H-320A
Esecutore/Executor Solfanelli

Foglio/Page 1
Segue/Follow 2
Ultimo/Last 217

LISTA FOGLI \ INDEX

Foglio Sheet	Descrizione Description	Revisione \ Revision 0	1	2	3	4	5	6	7	8	9
27	OPTIONAL										
	Optional										
28	MORSETTIERA QUADRO										
	Panel Terminal Board										
29	INTERNO QUADRO										
	Board Inside										
30	GUAINE E ACCESSORI										
	CONDUILTS AND CABLE GLAND										
31	RIASSUNTIVO CAVI										
	Cable summary										
32	RIASSUNTIVO CAVI										
	Cable Summary										
33	RIASSUNTIVO CAVI										
	Cable Summary										
34	RIASSUNTIVO CAVI										
	Cable Summary										
35	RIASSUNTIVO CAVI										
	Cable Summary										
36	RIASSUNTIVO CAVI										
	Cable Summary										
37	RIASSUNTIVO CAVI										
	Cable Summary										
38	RIASSUNTIVO CAVI										
	Cable Summary										
39	DISTINTA MATERIALI										
	Material List										

Foglio Sheet	Descrizione Description	Revisione \ Revision 0	1	2	3	4	5	6	7	8	9
40	DISTINTA MATERIALI										
	Material List										
41	DISTINTA MATERIALI										
	Material List										
42	DISTINTA CAVI										
	Cable list										
43	Distinta Materiali										
	MATERIAL LIST										

Note :

REV.	MODIFICA	DATA	FIRME
R.0.3	BOM review	06/11/2018	Solfanelli
R0.2.	Added RSE2 safety module	24/10/2018	Solfanelli
R0.1	Con Cablaggio per inverter MITSUBISHI FR-D700	03/09/2018	Solfanelli

Dis. N H320A/240ULCSA/5118
CAD SPAC
File H320A\1.dwg
Data 19/12/2018

Impianto/Plant: Schematic H-320A_240/60Hz PLC HW 1
Denominazione/Title: INDICE CONTENUTI
Content Index

Ordine/Requisition
Commessa/Order: H-320A
Esecutore/Executor: Solfanelli

Foglio/Page 2
Segue/Follow 3
Ultimo/Last 217

Sim.\Sym.	File	Descrizione\Description
	H5	Lampada *Lamp*
	H11	LED *Led*
	M2	Motore asincrono trifase *Three–phase inductor motor*
	M9	Motore corrente alternata monofase *Single–phase inductor motor*
	Q136Q	Int. automatico magnetotermico sezionatore tripolare *Three–phase automatic switch*
	R1	Resistore *Resistor*
	R6	Potenziometro *Potentiometer*
	R6Q	Potenziometro *Potentiometer*
	S2	Comando a Pulsante NO *Push button NO*
	S4C	Pulsante di emergenza NC *Emergency push button NC*
	S5	Comando rotativo a due posizioni NO *Rotary selector two position*

Sim.\Sym.	File	Descrizione\Description
	S7	Comando a pedale NO *Control pedal NO*
	S13C	Fine corsa comandato a camma libero NC *Limit switch free NC*
	S14C	Fine corsa comandato a camma azionato NC *Limit switch actuated NC*
	S15C	Comandato dal livello di un fluido (livellostato) NC *Water gauge NC*
	T2	Trasformatore per ausiliari con schermo *Trasformer for auxiliary white shield*
	Y1	Elettrovalvola (A) *Solenoid valve (A)*
	Y1A	Elettrovalvola (B) *Solenoid valve (B)*
	KA1	Bobina rele' Aux *Auxiliary relay coil*
	KM1	Bobina contattore *Contactor coil*
	BLK11	Trasformatore per ausiliari con schermo *Trasformer for auxiliary white shield*
	BLK12	Inverter (potenza) *Inverter (power)*

Sim.\Sym.	File	Descrizione\Description
	BLK13	Azionamento (potenza) *Drive (power)*
	BLK14	Inverter (ausiliari) *Inverter (auxiliary)*
	BLK15	Azionamento (ausiliari) *Drive (auxiliary)*
	BLK21	Motore passo-passo *Stepper motor*
	BLK41	Raccordo SX *Connector SX*
	BLK42	Raccordo DX *Connector DX*
	BLK43	Tubo corrugato *Corrugated pipe*
	BLK44	Riduzione PG *PG adapter*
	BLK51	Dado PG *PG nut*
	BLK56	Terminale a puntale *Terminal*
	BLK57	Filo unipolare *Wire*

REV.	MODIFICA	DATA	FIRME
R.0.3	BOM review	06/11/2018	Solfanelli
R0.2.	Added RSE2 safety module	24/10/2018	Solfanelli
R0.1	Con Cablaggio per inverter MITSUBISHI FR-D700	03/09/2018	Solfanelli

Dis. N. H320A/240ULCSA/5118
CAD SPAC
File H320A\1.dwg
Data 19/12/2018

Impianto/Plant: Schematic H–320A_240/60Hz PLC HW 1

Denominazione/Title: LEGENDA SIMBOLI
Symbol Key

Ordine/Requisition
Commessa/Order: H–320A
Esecutore/Executor: Solfanelli

MEP

Foglio/Page: 3
Segue/Follow: 4
Ultimo/Last: 217

Sim.\Sym.	File	Descrizione\Description
	BLK58	Fascette plastiche di fissaggio *Plastic clamp*
	BLK60	Terminale a occhiello *Terminal*
	BLK66	Sacchetto portafusibile *Bag fuse*
Fe	SPX08E	Dispositivo di prossimita' induttivo D.C. NO *Sensor of proximity fed DC NO*

REV.	MODIFICA	DATA	FIRME
R.0.3	BOM review	06/11/2018	Solfanelli
R0.2.	Added RSE2 safety module	24/10/2018	Solfanelli
R0.1	Con Cablaggio per inverter MITSUBISHI FR-D700	03/09/2018	Solfanelli

Dis. N. H320A/240ULCSA/5118
CAD SPAC
File H320A\1.dwg
Data 19/12/2018

Impianto/Plant
Schematic H-320A_240/60Hz
PLC HW 1

Denominazione/Title
LEGENDA SIMBOLI
Symbol Key

Ordine/Requisition
Commessa/Order H-320A
Esecutore/Executor Solfanelli

Foglio/Page 4
Segue/Follow 5
Ultimo/Last 217

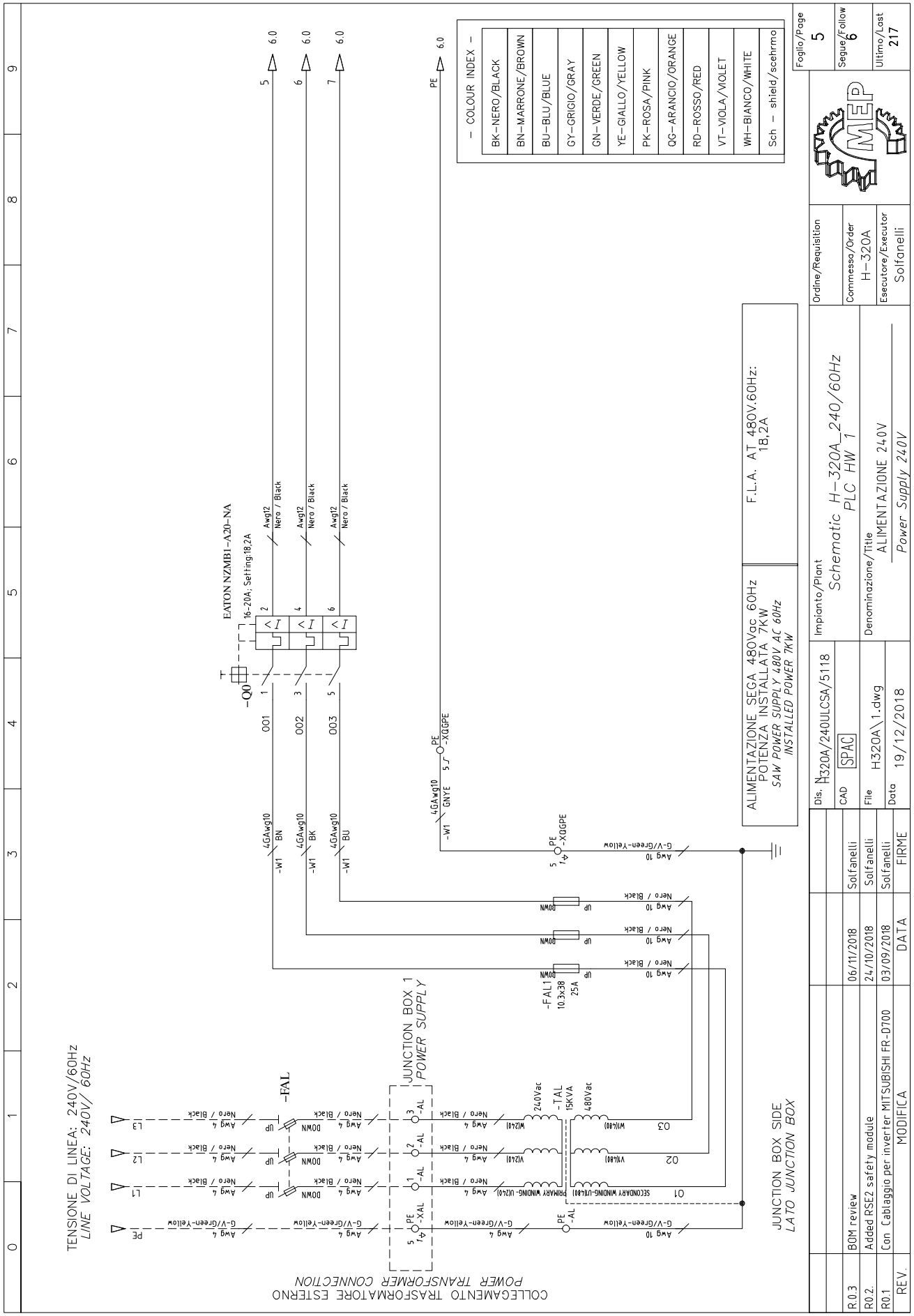
TENSIONE DI LINEA: 240V/60Hz
LINE VOLTAGE: 240V/ 60Hz
-FAL
JUNCTION BOX 1
POWER SUPPLY
COLLEGAMENTO TRASFORMATORE ESTERNO
POWER TRANSFORMER CONNECTION
EATON NZMB1-A20-NA
16-20A; Setting:18,2A
-Q0
-FAL1
10.3x38
25A
-TAL
15KVA
240Vac
480Vac
PRIMARY WINDING-U1(240)
SECONDARY WINDING-U1(480)
JUNCTION BOX SIDE
LATO JUNCTION BOX
ALIMENTAZIONE SEGA 480Vac 60Hz
POTENZA INSTALLATA 7KW
SAW POWER SUPPLY 480V AC 60Hz
INSTALLED POWER 7KW
F.L.A. AT 480V.60Hz:
18,2A
- COLOUR INDEX -
BK-NERO/BLACK
BN-MARRONE/BROWN
BU-BLU/BLUE
GY-GRIGIO/GRAY
GN-VERDE/GREEN
YE-GIALLO/YELLOW
PK-ROSA/PINK
OG-ARANCIO/ORANGE
RD-ROSSO/RED
VT-VIOLA/VIOLET
WH-BIANCO/WHITE
Sch - shield/scehrmo
Foglio/Page 5
Segue/Follow 6
Ultimo/Last 217
Ordine/Requisition
Commessa/Order H-320A
Esecutore/Executor Solfanelli
Impianto/Plant
Schematic H-320A_240/60Hz
PLC HW 1
Denominazione/Title
ALIMENTAZIONE 240V
Power Supply 240V
Dis. H320A/240ULCSA/5118
CAD SPAC
File H320A\1.dwg
Data 19/12/2018
R0.3 BOM review 06/11/2018 Solfanelli
R0.2 Added RSE2 safety module 24/10/2018 Solfanelli
R0.1 Con Cablaggio per inverter MITSUBISHI FR-D700 03/09/2018 Solfanelli
REV. MODIFICA DATA FIRME

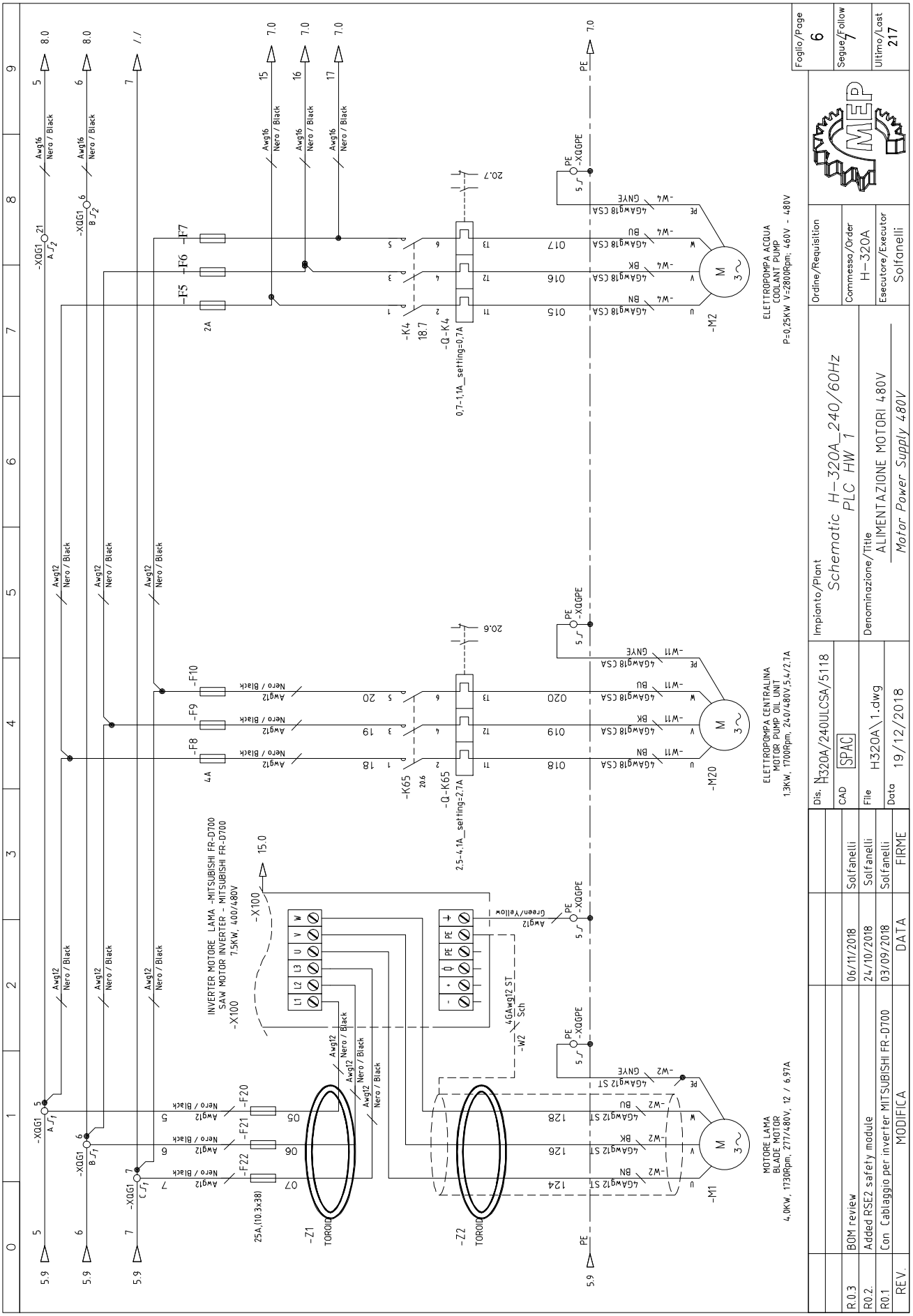
Foglio/Page 6
Segue/Follow 7
Ultimo/Last 217
Ordine/Requisition
Commessa/Order H-320A
Esecutore/Executor Solfanelli
Impianto/Plant
Schematic H-320A_240/60Hz
PLC HW 1
Denominazione/Title
ALIMENTAZIONE MOTORI 480V
Motor Power Supply 480V
Dis. H320A/240ULCSA/5118
CAD SPAC
File H320A\1.dwg
Data 19/12/2018
R0.3 BOM review 06/11/2018 Solfanelli
R0.2. Added RSE2 safety module 24/10/2018 Solfanelli
R0.1 Con Cablaggio per inverter MITSUBISHI FR-D700 03/09/2018 Solfanelli
REV. MODIFICA DATA FIRME
ELETTROPOMPA ACQUA
COOLANT PUMP
P=0,25KW V=2800Rpm; 460V - 480V
ELETTROPOMPA CENTRALINA
MOTOR PUMP OIL UNIT
1,3KW, 1700Rpm, 240/480V,5,4/2,7A
MOTORE LAMA
BLADE MOTOR
4,0KW, 1730Rpm, 277/480V, 12 / 6,97A
INVERTER MOTORE LAMA -MITSUBISHI FR-D700
SAW MOTOR INVERTER - MITSUBISHI FR-D700
7,5KW, 400/480V
-X100
-K4
-Q-K4
0,7-1,1A_setting=0,7A
-K65
-Q-K65
2,5-4,1A_setting=2,7A
-M2
-M20
-M1
-Z1
-Z2
TOROID
-F5
-F6
-F7
-F8
-F9
-F10
-F20
-F21
-F22
-XQG1
-XQGPE
-W2
-W4
-W11
-W7
4GAwg12 ST
4GAwg18 CSA
Awg12
Awg16
Nero / Black
Green/Yellow

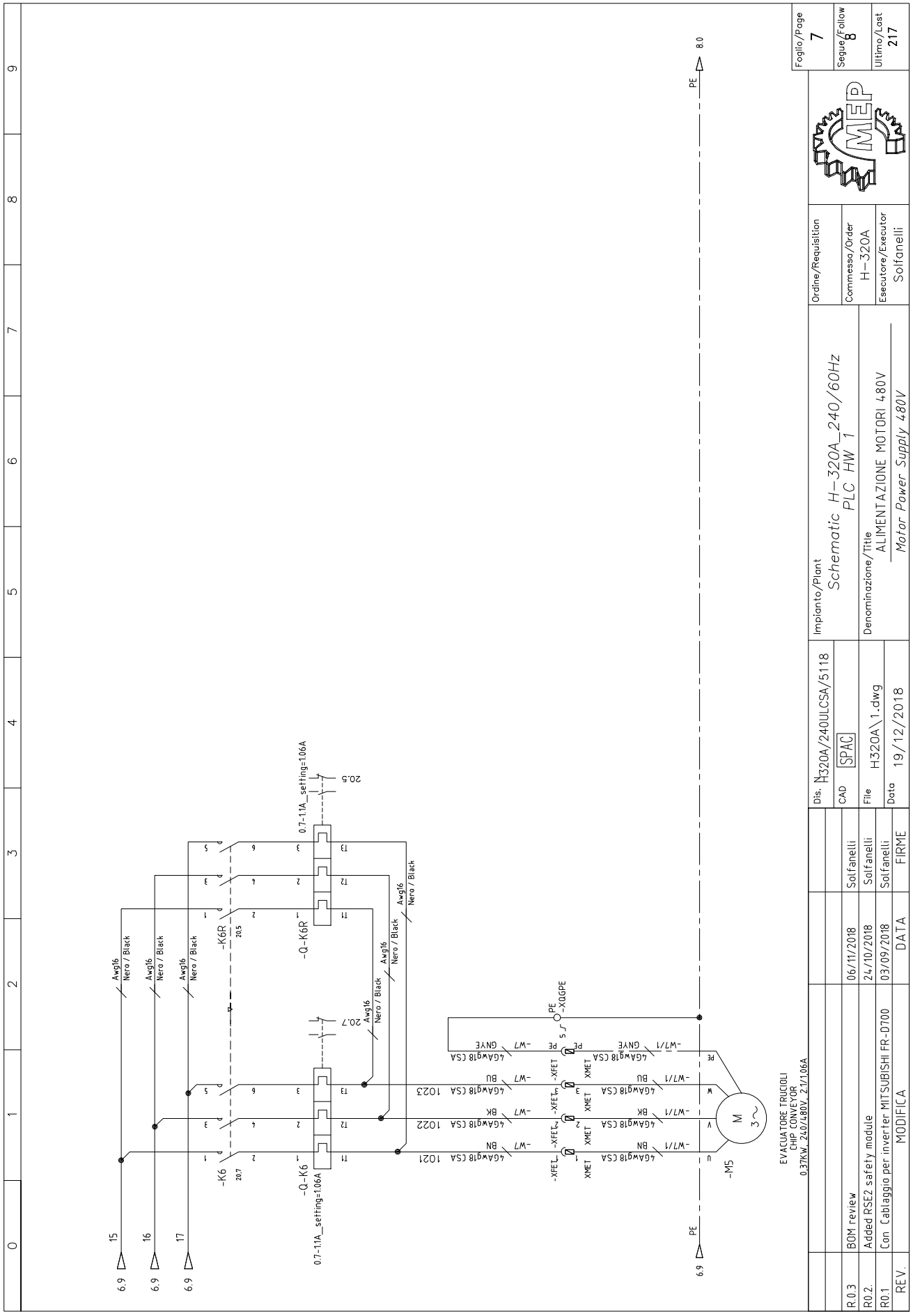
Foglio/Page 7
Segue/Follow 8
Ultimo/Last 217
Ordine/Requisition
Commessa/Order H-320A
Esecutore/Executor Solfanelli
Impianto/Plant
Schematic H-320A_240/60Hz
PLC HW 1
Denominazione/Title
ALIMENTAZIONE MOTORI 480V
Motor Power Supply 480V
Dis. H320A/240ULCSA/5118
CAD SPAC
File H320A\1.dwg
Data 19/12/2018
EVACUATORE TRUCIOLI
CHIP CONVEYOR
0,37KW, 240/480V, 21/106A
R0.3 BOM review 06/11/2018 Solfanelli
R0.2. Added RSE2 safety module 24/10/2018 Solfanelli
R0.1 Con Cablaggio per inverter MITSUBISHI FR-D700 03/09/2018 Solfanelli
REV. MODIFICA DATA FIRME
-K6
-K6R
-Q-K6
-Q-K6R
0.7-11A_setting=106A
-M5
M
3~
PE
-XQGPE
Awg16 Nero / Black
4GAwg18 CSA
-W7
-W7/1
-XFET
XMET
GNYE
BU
BK
BN
1021
1022
1023
6.9
8.0
15
16
17

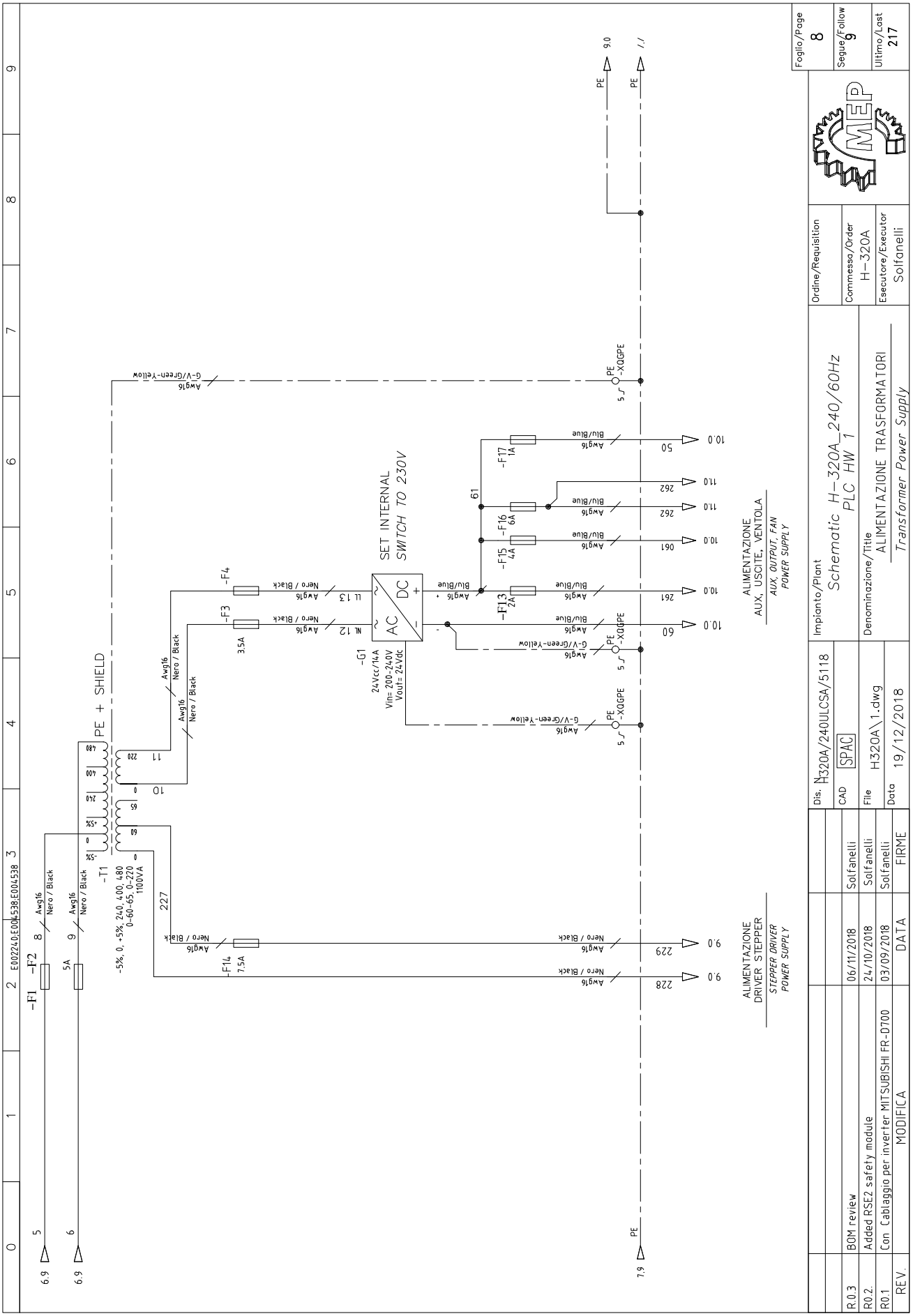
Foglio/Page 8
Segue/Follow 9
Ultimo/Last 217
Ordine/Requisition
Commessa/Order H-320A
Esecutore/Executor Solfanelli
Impianto/Plant
Schematic H-320A_240/60Hz
PLC HW 1
Denominazione/Title
ALIMENTAZIONE TRASFORMATORI
Transformer Power Supply
Dis. H320A/240ULCSA/5118
CAD SPAC
File H320A\1.dwg
Data 19/12/2018
R0.3 BOM review 06/11/2018 Solfanelli
R0.2. Added RSE2 safety module 24/10/2018 Solfanelli
R0.1 Con Cablaggio per inverter MITSUBISHI FR-D700 03/09/2018 Solfanelli
REV. MODIFICA DATA FIRME
SET INTERNAL
SWITCH TO 230V
-G1
24Vcc/14A
Vin= 200-240V
Vout= 24Vdc
AC DC
-T1
-5%, 0, +5% 240, 400, 480
0-60-65, 0-220
1100VA
PE + SHIELD
-F1
-F2
5A
-F3
3.5A
-F4
-F13
2A
-F14
7.5A
-F15
4A
-F16
6A
-F17
1A
-XQGPE
ALIMENTAZIONE
AUX, USCITE, VENTOLA
AUX, OUTPUT, FAN
POWER SUPPLY
ALIMENTAZIONE
DRIVER STEPPER
STEPPER DRIVER
POWER SUPPLY

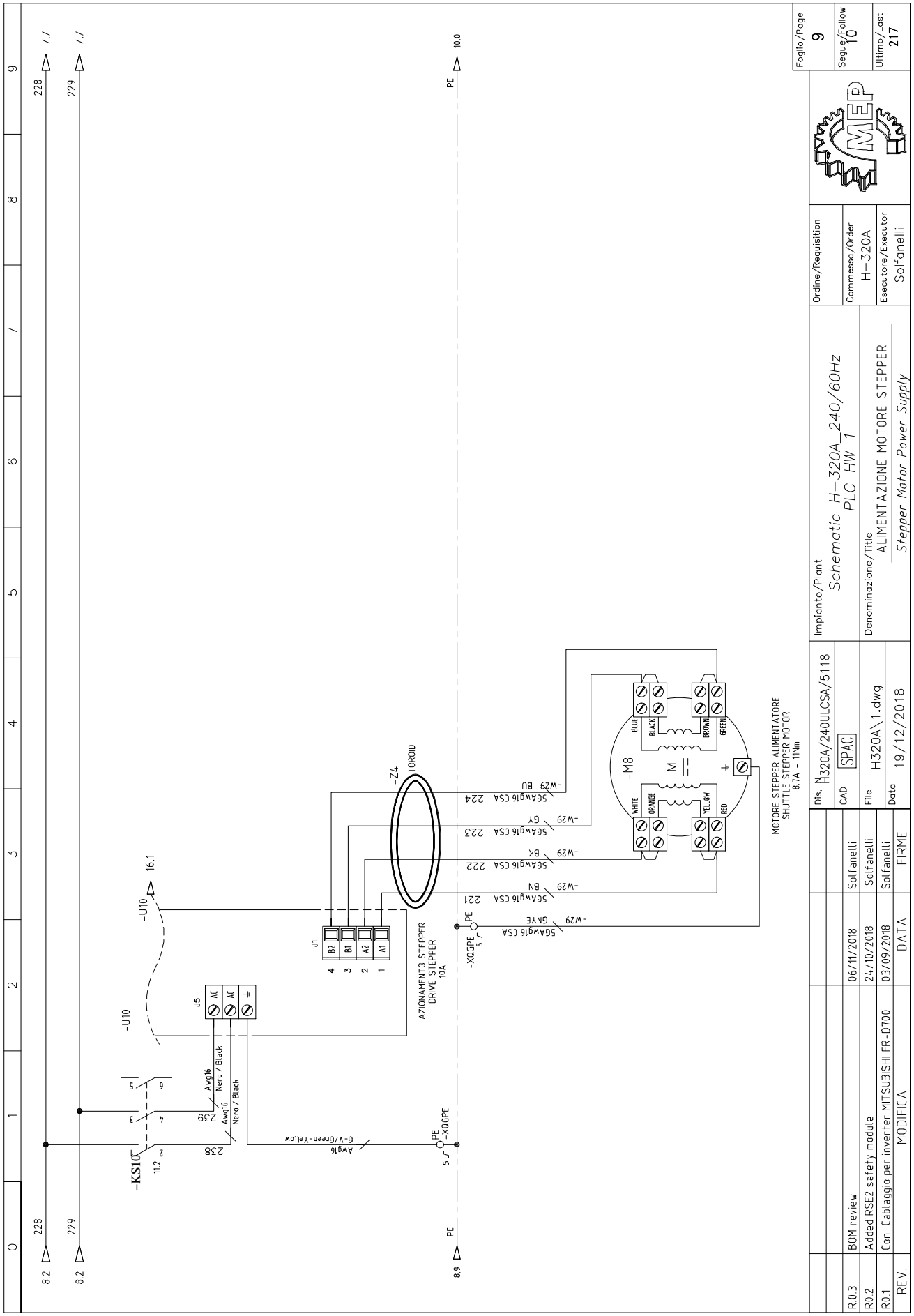
Foglio/Page 9
Segue/Follow 10
Ultimo/Last 217
Ordine/Requisition
Commessa/Order H-320A
Esecutore/Executor Solfanelli
Impianto/Plant
Schematic H-320A_240/60Hz
PLC HW 1
Denominazione/Title
ALIMENTAZIONE MOTORE STEPPER
Stepper Motor Power Supply
Dis. H320A/240ULCSA/5118
CAD SPAC
File H320A\1.dwg
Data 19/12/2018
MOTORE STEPPER ALIMENTATORE
SHUTTLE STEPPER MOTOR
8.7A - 11Nm
AZIONAMENTO STEPPER
DRIVE STEPPER
10A
-Z4
TOROID
-M8
-KS10
-U10
-XQGPE
-W29
56Awg16 CSA
Awg16
Nero / Black
G-V/Green-Yellow
BLUE
BLACK
BROWN
GREEN
WHITE
ORANGE
YELLOW
RED
REV.
MODIFICA
DATA
FIRME
R0.3 BOM review 06/11/2018 Solfanelli
R0.2. Added RSE2 safety module 24/10/2018 Solfanelli
R0.1 Con Cablaggio per inverter MITSUBISHI FR-D700 03/09/2018 Solfanelli

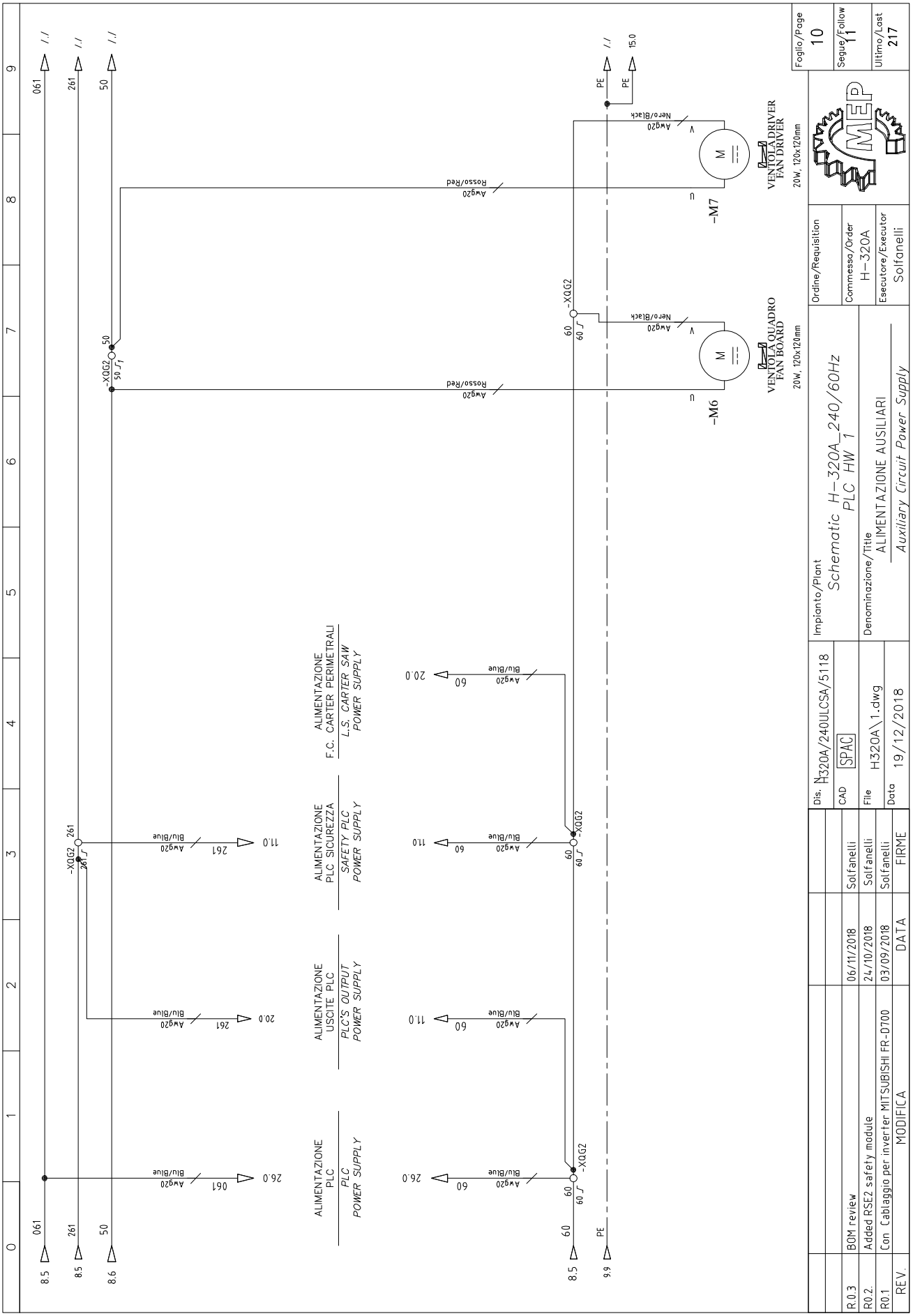
ALIMENTAZIONE PLC
PLC POWER SUPPLY
ALIMENTAZIONE USCITE PLC
PLC'S OUTPUT POWER SUPPLY
ALIMENTAZIONE PLC SICUREZZA
SAFETY PLC POWER SUPPLY
ALIMENTAZIONE F.C. CARTER PERIMETRALI
L.S. CARTER SAW POWER SUPPLY
VENTOLA DRIVER
FAN DRIVER
20W, 120x120mm
VENTOLA QUADRO
FAN BOARD
20W, 120x120mm
-M6
-M7
-XQG2
Awg20
Rosso/Red
Nero/Black
Blu/Blue
Impianto/Plant
Schematic H-320A_240/60Hz
PLC HW 1
Denominazione/Title
ALIMENTAZIONE AUSILIARI
Auxiliary Circuit Power Supply
Dis. H320A/240ULCSA/5118
CAD SPAC
File H320A\1.dwg
Data 19/12/2018
Ordine/Requisition
Commessa/Order H-320A
Esecutore/Executor Solfanelli
Foglio/Page 10
Segue/Follow 11
Ultimo/Last 217
R0.3 BOM review 06/11/2018 Solfanelli
R0.2. Added RSE2 safety module 24/10/2018 Solfanelli
R0.1 Con Cablaggio per inverter MITSUBISHI FR-D700 03/09/2018 Solfanelli
REV. MODIFICA DATA FIRME

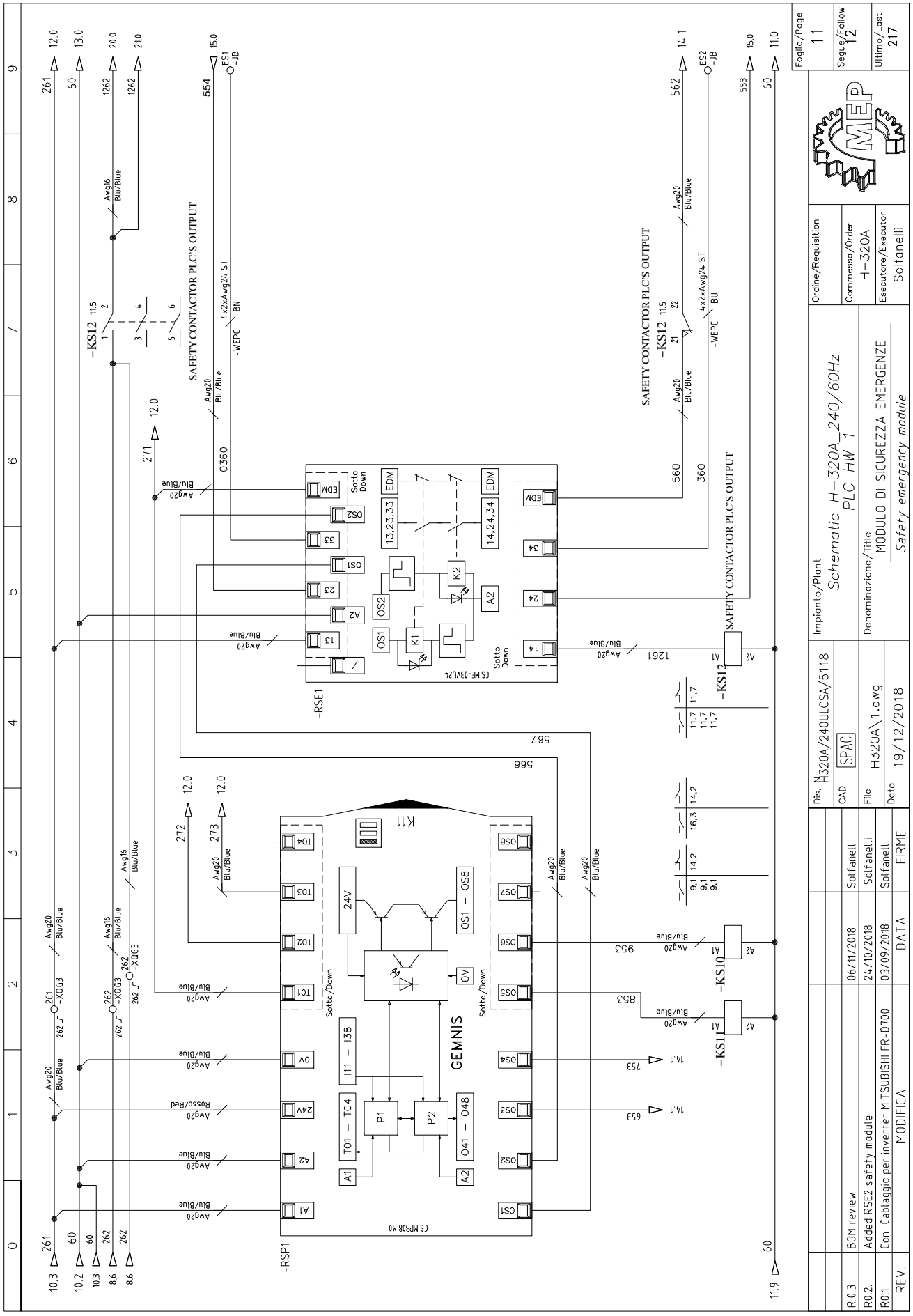
SAFETY CONTACTOR PLC'S OUTPUT
-KS12
-RSE1
-RSP1
GEMNIS
-KS10
-KS11
Foglio/Page 11
Segue/Follow 12
Ultimo/Last 217
Impianto/Plant
Schematic H-320A_240/60Hz
PLC HW 1
Denominazione/Title
MODULO DI SICUREZZA EMERGENZE
Safety emergency module
Ordine/Requisition
Commessa/Order H-320A
Esecutore/Executor Solfanelli
Dis. H320A/240ULCSA/5118
CAD SPAC
File H320A\1.dwg
Data 19/12/2018
R0.3 BOM review 06/11/2018 Solfanelli
R0.2 Added RSE2 safety module 24/10/2018 Solfanelli
R0.1 Con Cablaggio per inverter MITSUBISHI FR-D700 03/09/2018 Solfanelli
REV. MODIFICA DATA FIRME

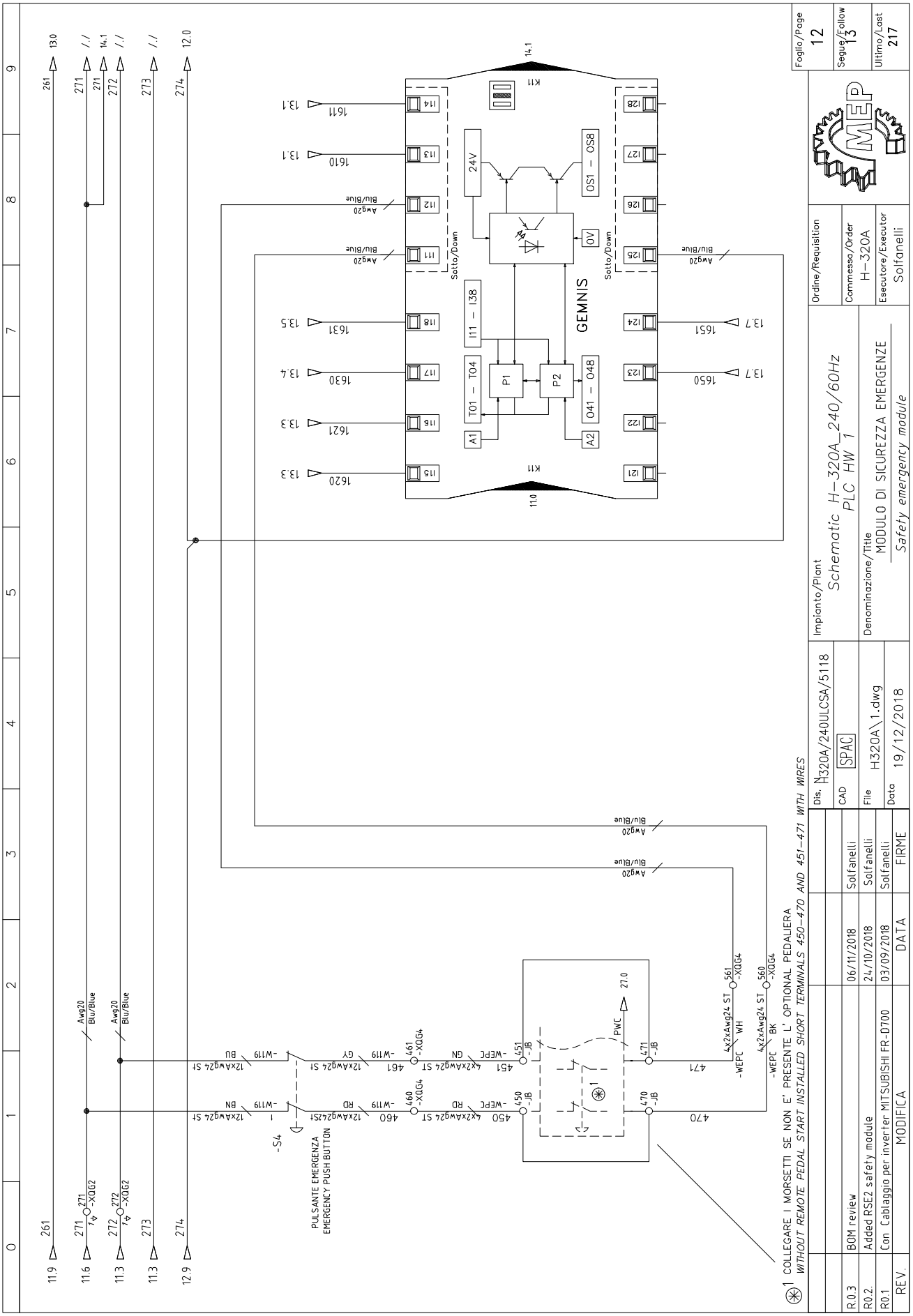
GEMNIS
Sotto/Down
Sotto/Down
24V
OS1 – OS8
0V
I11 – I38
T01 – T04
O41 – O48
A1
A2
P1
P2
K11
K11
Fogli/Page 12
Segue/Follow 13
Ultimo/Last 217
Ordine/Requisition
Commessa/Order H–320A
Esecutore/Executor Solfanelli
Impianto/Plant
Schematic H–320A_240/60Hz
PLC HW 1
Denominazione/Title
MODULO DI SICUREZZA EMERGENZE
Safety emergency module
Dis. H320A/240ULCSA/5118
CAD SPAC
File H320A\1.dwg
Data 19/12/2018
PULSANTE EMERGENZA
EMERGENCY PUSH BUTTON
-S4
COLLEGARE I MORSETTI SE NON E' PRESENTE L' OPTIONAL PEDALIERA
WITHOUT REMOTE PEDAL START INSTALLED SHORT TERMINALS 450–470 AND 451–471 WITH WIRES
R0.3 BOM review 06/11/2018 Solfanelli
R0.2. Added RSE2 safety module 24/10/2018 Solfanelli
R0.1 Con Cablaggio per inverter MITSUBISHI FR-D700 03/09/2018 Solfanelli
REV. MODIFICA DATA FIRME

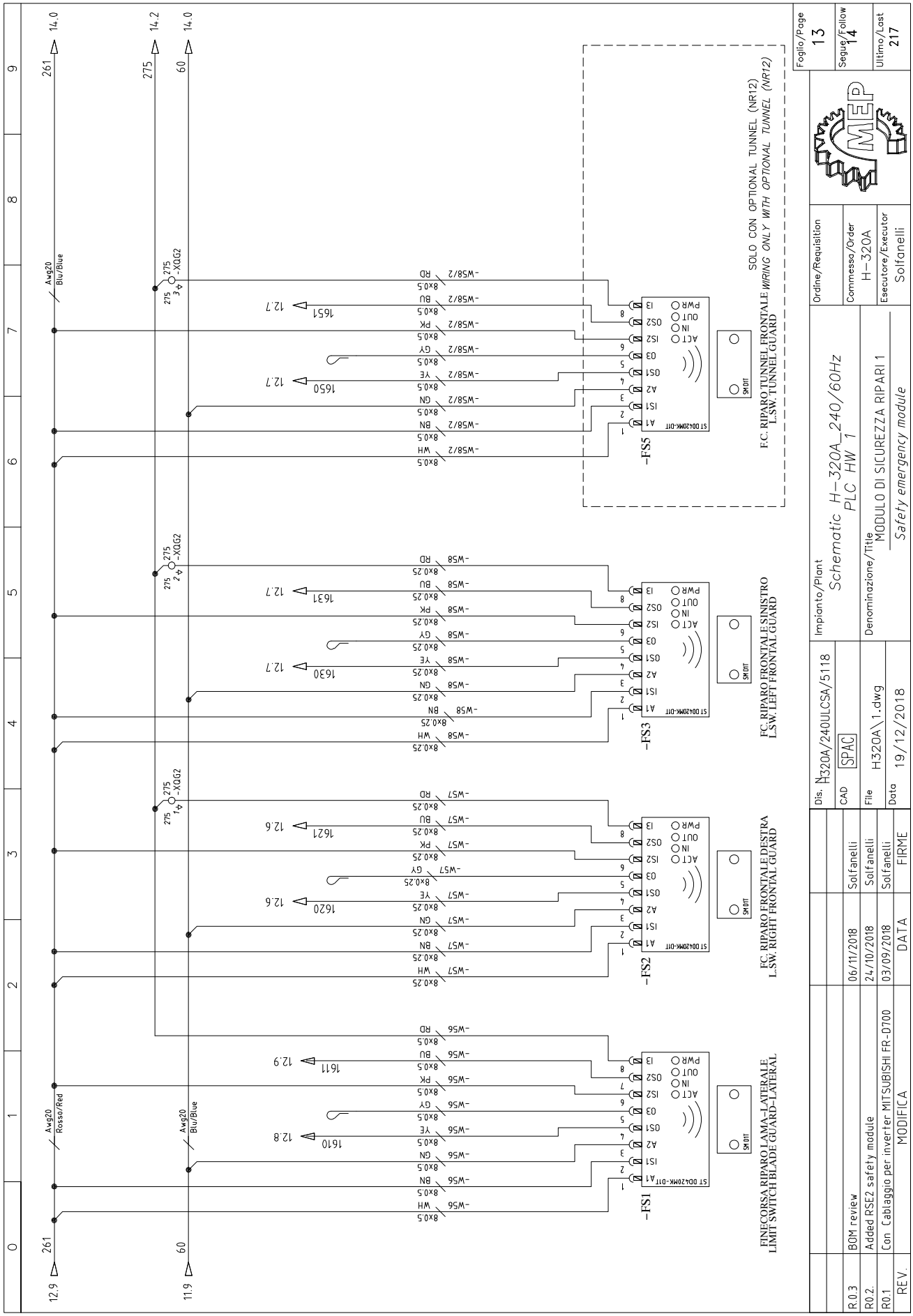
FINECORSA RIPARO LAMA-LATERALE
LIMIT SWITCH BLADE GUARD-LATERAL
FC. RIPARO FRONTALE DESTRA
L.SW. RIGHT FRONTAL GUARD
FC. RIPARO FRONTALE SINISTRO
L.SW. LEFT FRONTAL GUARD
F.C. RIPARO TUNNEL FRONTALE
L.SW. TUNNEL GUARD
SOLO CON OPTIONAL TUNNEL (NR12)
WIRING ONLY WITH OPTIONAL TUNNEL (NR12)
-FS1
-FS2
-FS3
-FS5
Schematic H-320A_240/60Hz
PLC HW 1
MODULO DI SICUREZZA RIPARI 1
Safety emergency module
H320A/240ULCSA/5118
SPAC
H320A\1.dwg
19/12/2018
H-320A
Solfanelli
Foglio/Page 13
Segue/Follow 14
Ultimo/Last 217
R0.3 BOM review 06/11/2018 Solfanelli
R0.2 Added RSE2 safety module 24/10/2018 Solfanelli
R0.1 Con Cablaggio per inverter MITSUBISHI FR-D700 03/09/2018 Solfanelli
REV. MODIFICA DATA FIRME

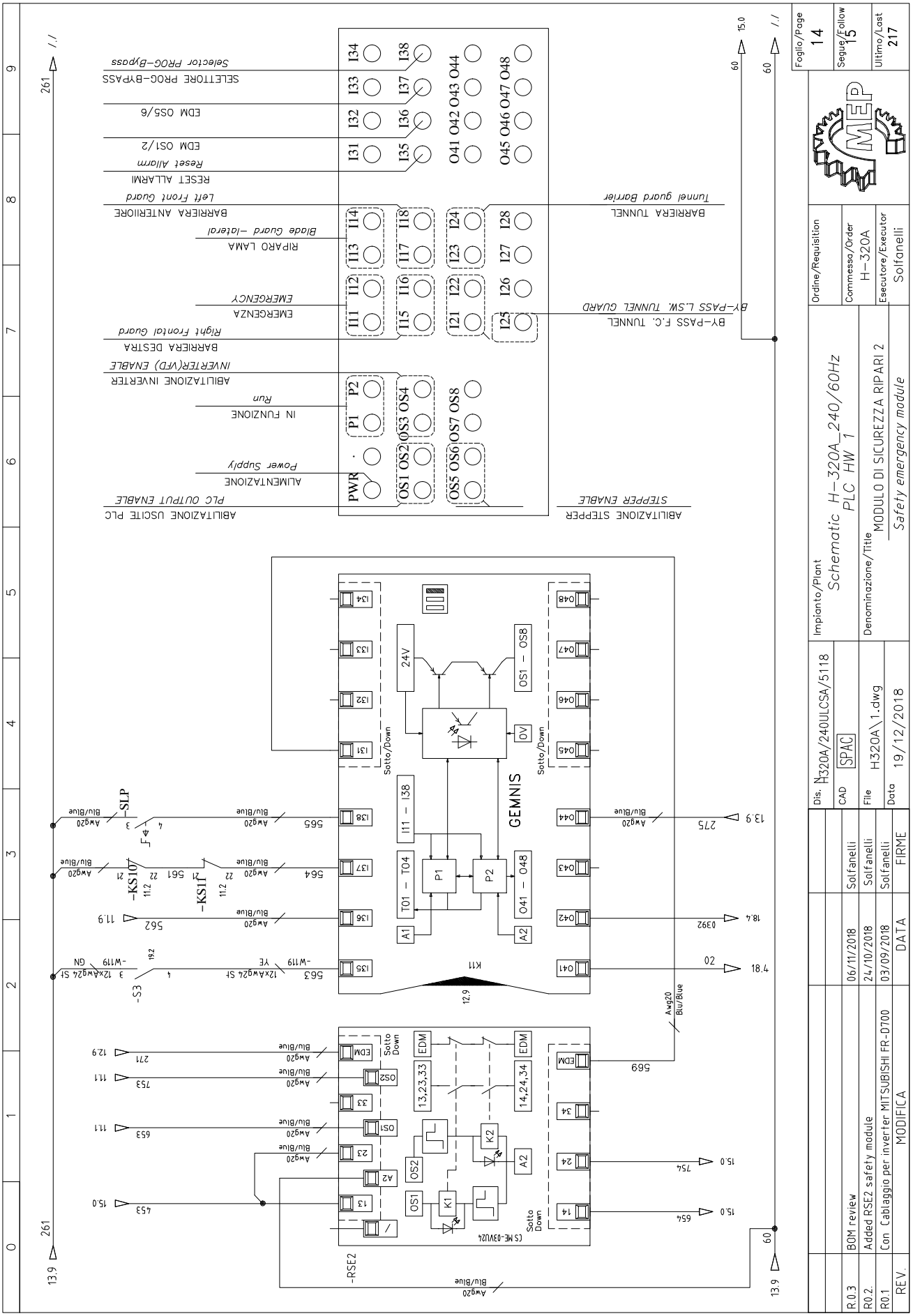
Schematic H-320A_240/60Hz
PLC HW 1
MODULO DI SICUREZZA RIPARI 2
Safety emergency module
GEMNIS
ABILITAZIONE USCITE PLC
PLC OUTPUT ENABLE
ALIMENTAZIONE
Power Supply
IN FUNZIONE
Run
ABILITAZIONE INVERTER
INVERTER(VFD) ENABLE
BARRIERA DESTRA
Right Frontal Guard
EMERGENZA
EMERGENCY
RIPARO LAMA
Blade Guard -lateral
BARRIERA ANTERIORE
Left Front Guard
RESET ALLARMI
Reset Allarm
EDM OS1/2
EDM OS5/6
SELETTORE PROG-BYPASS
Selector PROG-Bypass
BY-PASS F.C. TUNNEL
BY-PASS L.SW. TUNNEL GUARD
BARRIERA TUNNEL
Tunnel guard Barrier
ABILITAZIONE STEPPER
STEPPER ENABLE
Impianto/Plant
Denominazione/Title
Ordine/Requisition
Commessa/Order
H-320A
Esecutore/Executor
Solfanelli
Dis. H320A/240ULCSA/5118
CAD SPAC
File H320A\1.dwg
Data 19/12/2018
Fogli/Page 14
Segue/Follow 15
Ultimo/Last 217
R0.3 BOM review 06/11/2018 Solfanelli
R0.2 Added RSE2 safety module 24/10/2018 Solfanelli
R0.1 Con Cablaggio per inverter MITSUBISHI FR-D700 03/09/2018 Solfanelli
REV. MODIFICA DATA FIRME

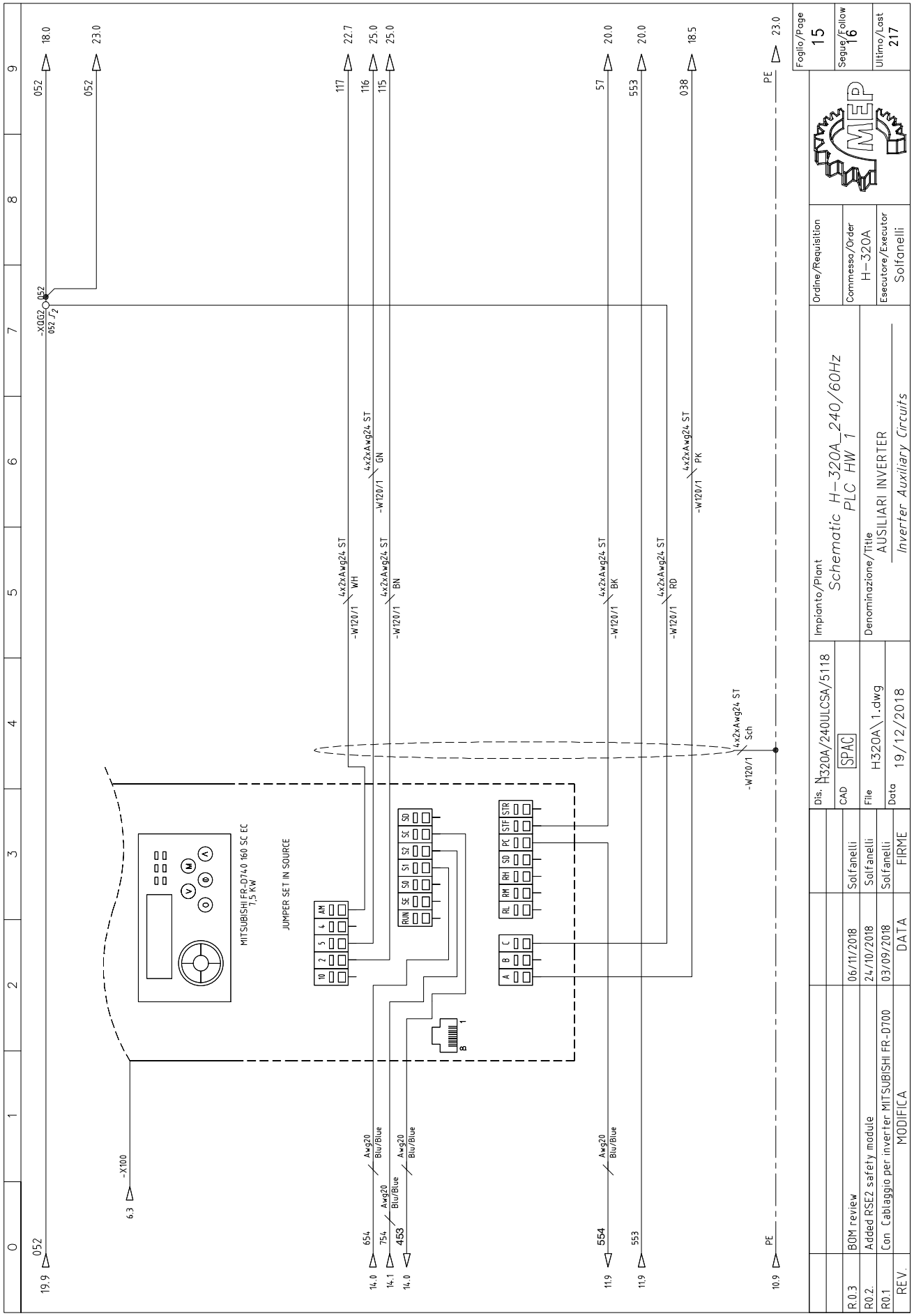
Foglio/Page 15
Segue/Follow 16
Ultimo/Last 217
Ordine/Requisition
Commessa/Order H-320A
Esecutore/Executor Solfanelli
Impianto/Plant
Schematic H-320A_240/60Hz
PLC HW 1
Denominazione/Title
AUSILIARI INVERTER
Inverter Auxiliary Circuits
Dis. H320A/240ULCSA/5118
CAD SPAC
File H320A\1.dwg
Data 19/12/2018
MITSUBISHI FR-D740 160 SC EC
7,5 KW
JUMPER SET IN SOURCE
-X100
-XQG2
-W120/1
4x2xAwg24 ST
Awg20 Blu/Blue
R0.3 BOM review 06/11/2018 Solfanelli
R0.2 Added RSE2 safety module 24/10/2018 Solfanelli
R0.1 Con Cablaggio per inverter MITSUBISHI FR-D700 03/09/2018 Solfanelli
REV. MODIFICA DATA FIRME

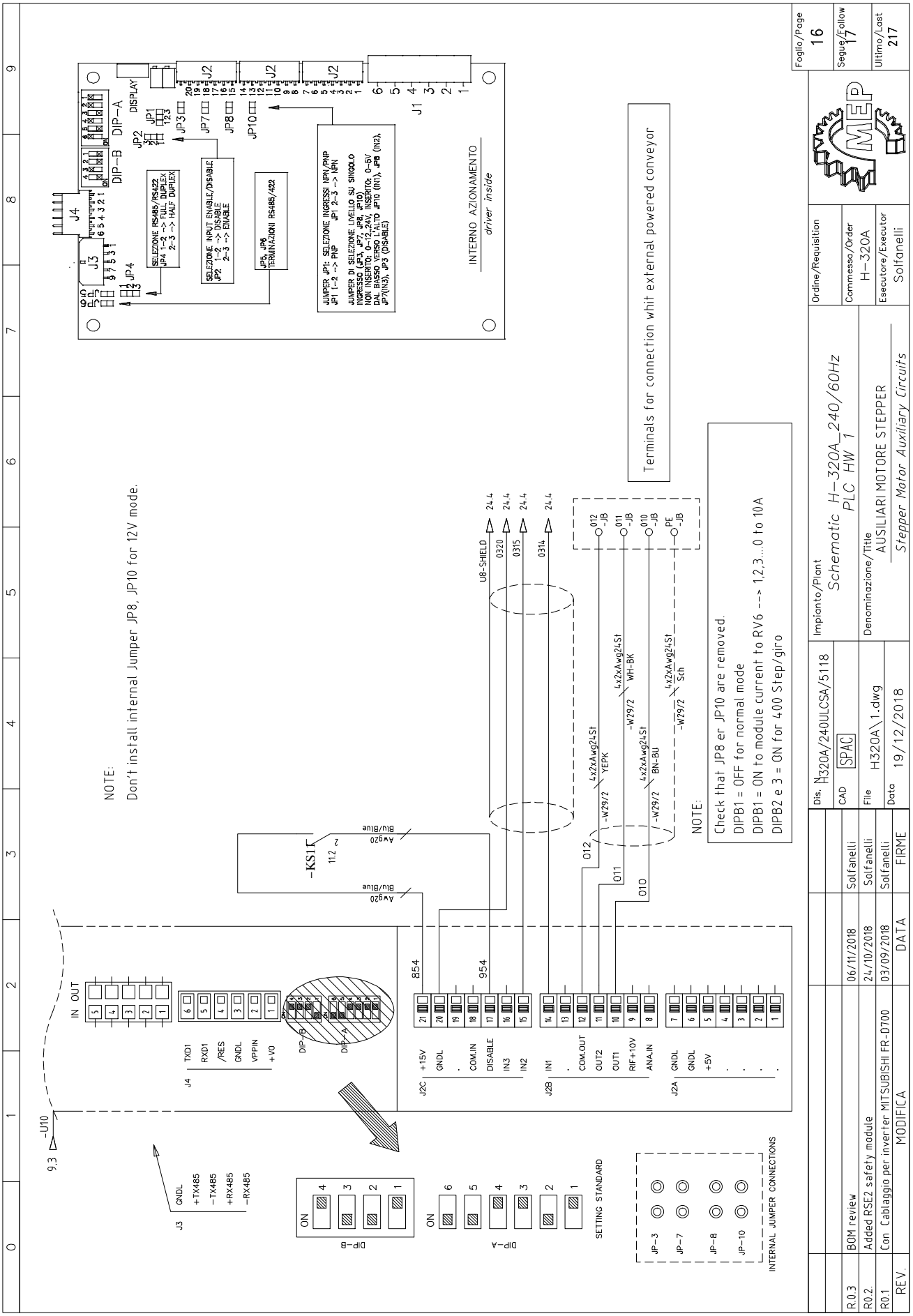
NOTE:
Don't install internal Jumper JP8, JP10 for 12V mode.
Terminals for connection whit external powered conveyor
INTERNO AZIONAMENTO
driver inside
NOTE:
Check that JP8 er JP10 are removed.
DIPB1 = OFF for normal mode
DIPB1 = ON to module current to RV6 ---> 1,2,3....0 to 10A
DIPB2 e 3 = ON for 400 Step/giro
SETTING STANDARD
INTERNAL JUMPER CONNECTIONS
Schematic H-320A_240/60Hz
PLC HW 1
AUSILIARI MOTORE STEPPER
Stepper Motor Auxiliary Circuits
H320A/240ULCSA/5118
SPAC
H320A\1.dwg
19/12/2018
Solfanelli
H-320A
Foglio/Page 16
Segue/Follow 17
Ultimo/Last 217
R0.3 BOM review 06/11/2018
R0.2 Added RSE2 safety module 24/10/2018
R0.1 Con Cablaggio per inverter MITSUBISHI FR-D700 03/09/2018
REV. MODIFICA DATA FIRME

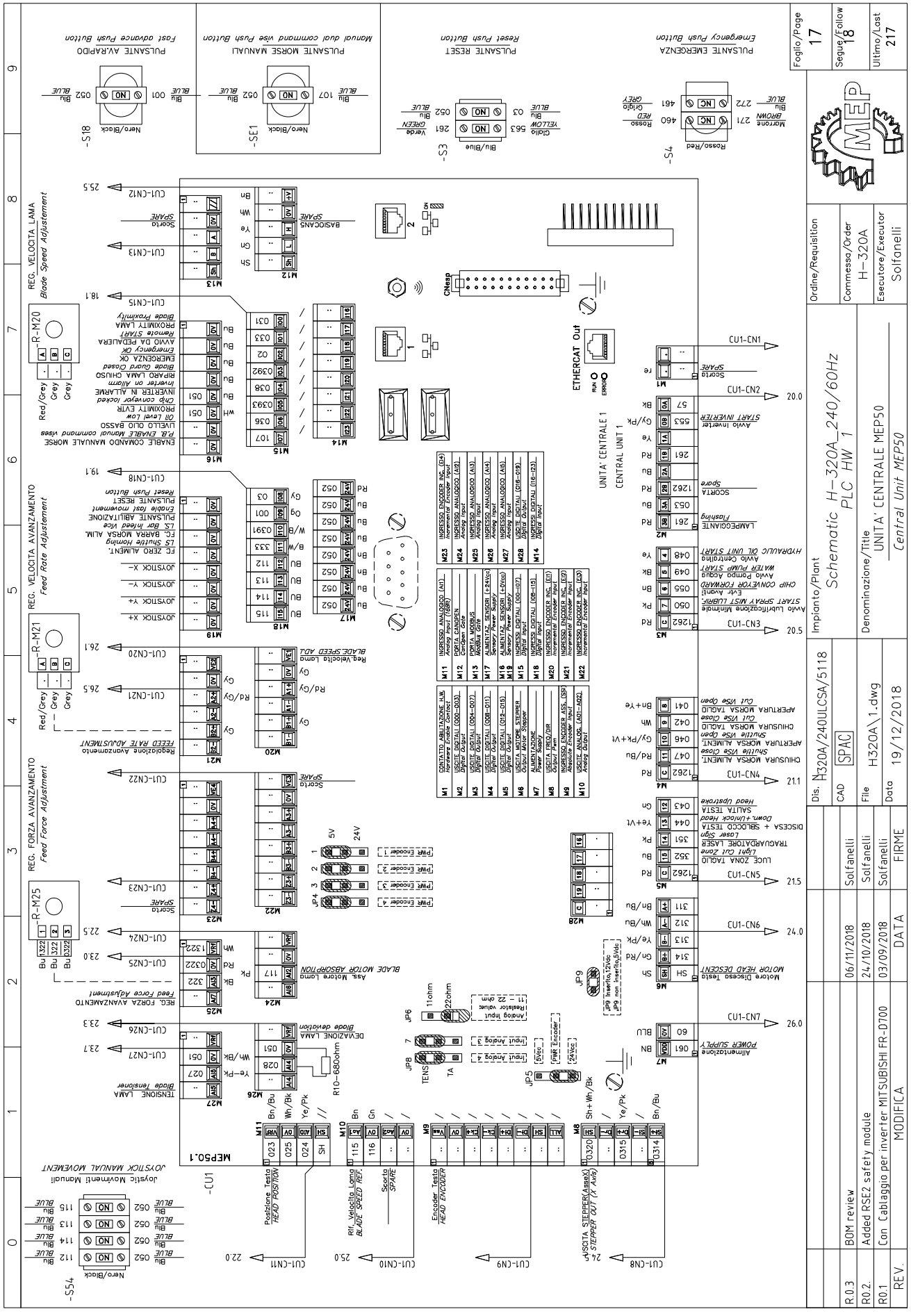
Foglio/Page 17
Segue/Follow 18
Ultimo/Last 217
Ordine/Requisition
Commessa/Order H-320A
Esecutore/Executor Solfanelli
Impianto/Plant
Schematic H-320A_240/60Hz
PLC HW 1
Denominazione/Title
UNITA' CENTRALE MEP50
Central Unit MEP50
Dis. H320A/240ULCSA/5118
CAD SPAC
File H320A\1.dwg
Data 19/12/2018
Solfanelli
FIRME
DATA
MODIFICA
REV.
R0.3 BOM review 06/11/2018
R0.2 Added RSE2 safety module 24/10/2018
R0.1 Con Cablaggio per inverter MITSUBISHI FR-D700 03/09/2018
PULSANTE EMERGENZA
Emergency Push Button
PULSANTE RESET
Reset Push Button
PULSANTE MORSE MANUALI
Manual dual command vise Push Button
PULSANTE AV.RAPIDO
Fast advance Push Button
REG. VELOCITA LAMA
Blade Speed Adjustement
REG. VELOCITA AVANZAMENTO
Feed Rate Adjustement
REG. FORZA AVANZAMENTO
Feed Force Adjustment
UNITA' CENTRALE 1
CENTRAL UNIT 1
ETHERCAT Out
JOYSTICK MANUAL MOVEMENT
Joystic Movment Manuali
MEP50.1
-CU1

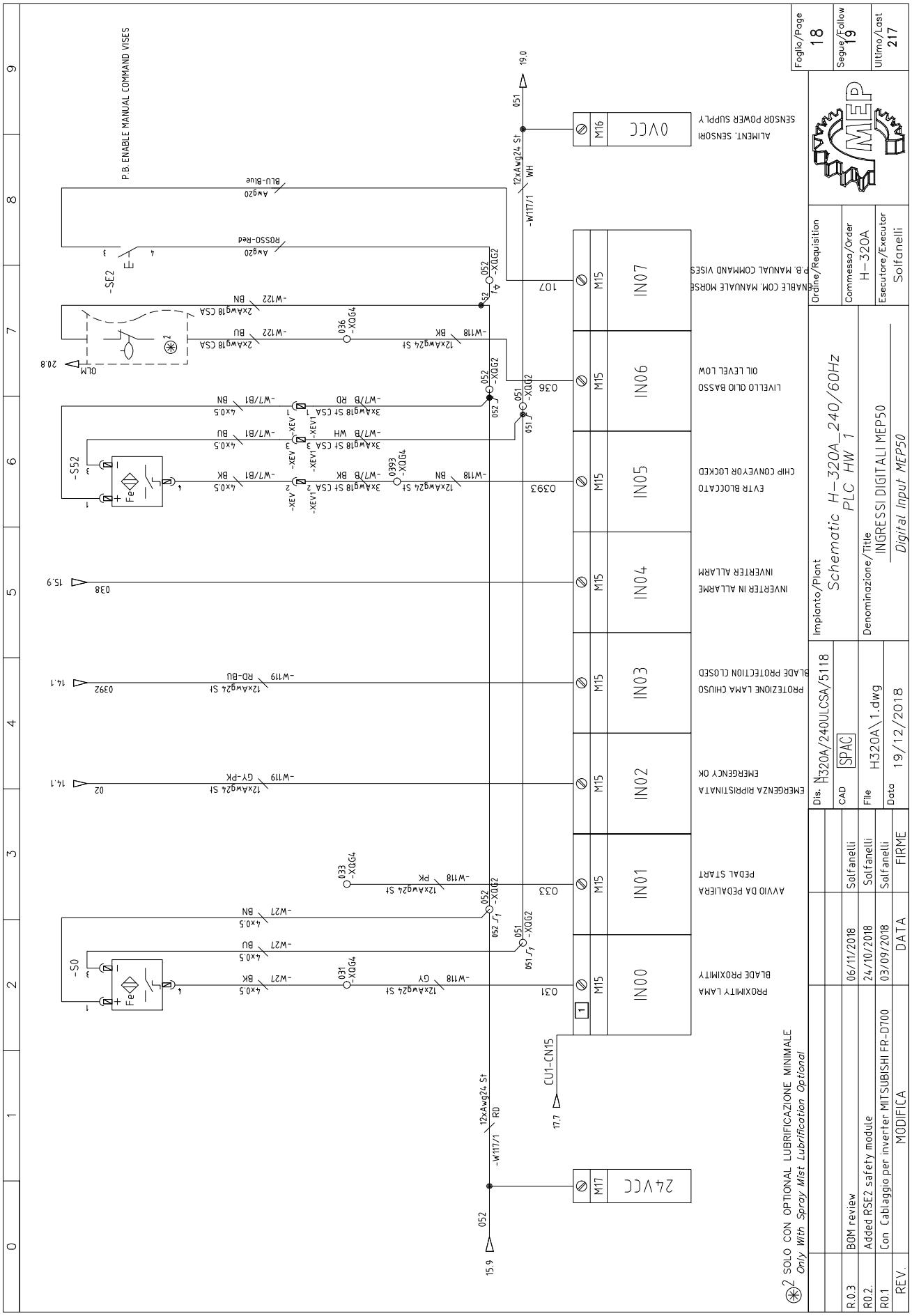
Foglio/Page 18
Segue/Follow 19
Ultimo/Last 217
Ordine/Requisition
Commessa/Order H-320A
Esecutore/Executor Solfanelli
Impianto/Plant
Schematic H-320A_240/60Hz
PLC HW 1
Denominazione/Title
INGRESSI DIGITALI MEP50
Digital Input MEP50
Dis. H320A/240ULCSA/5118
CAD SPAC
File H320A\1.dwg
Data 19/12/2018
FIRME
DATA
Solfanelli
06/11/2018
24/10/2018
03/09/2018
R0.3 BOM review
R0.2 Added RSE2 safety module
R0.1 Con Cablaggio per inverter MITSUBISHI FR-D700
REV.
MODIFICA
SOLO CON OPTIONAL LUBRIFICAZIONE MINIMALE
Only With Spray Mist Lubrification Optional
24VCC
0VCC
IN00
IN01
IN02
IN03
IN04
IN05
IN06
IN07
PROXIMITY LAMA
BLADE PROXIMITY
AVVIO DA PEDALIERA
PEDAL START
EMERGENZA RIPRISTINATA
EMERGENCY OK
PROTEZIONE LAMA CHIUSO
BLADE PROTECTION CLOSED
INVERTER IN ALLARME
INVERTER ALLARM
EVYR BLOCCATO
CHIP CONVEYOR LOCKED
LIVELLO OLIO BASSO
OIL LEVEL LOW
P.B. MANUAL COMMAND VISES
ALIMENT. SENSORI
SENSOR POWER SUPPLY
P.B. ENABLE MANUAL COMMAND VISES
-SE2
-S0
-S52
CU1-CN15

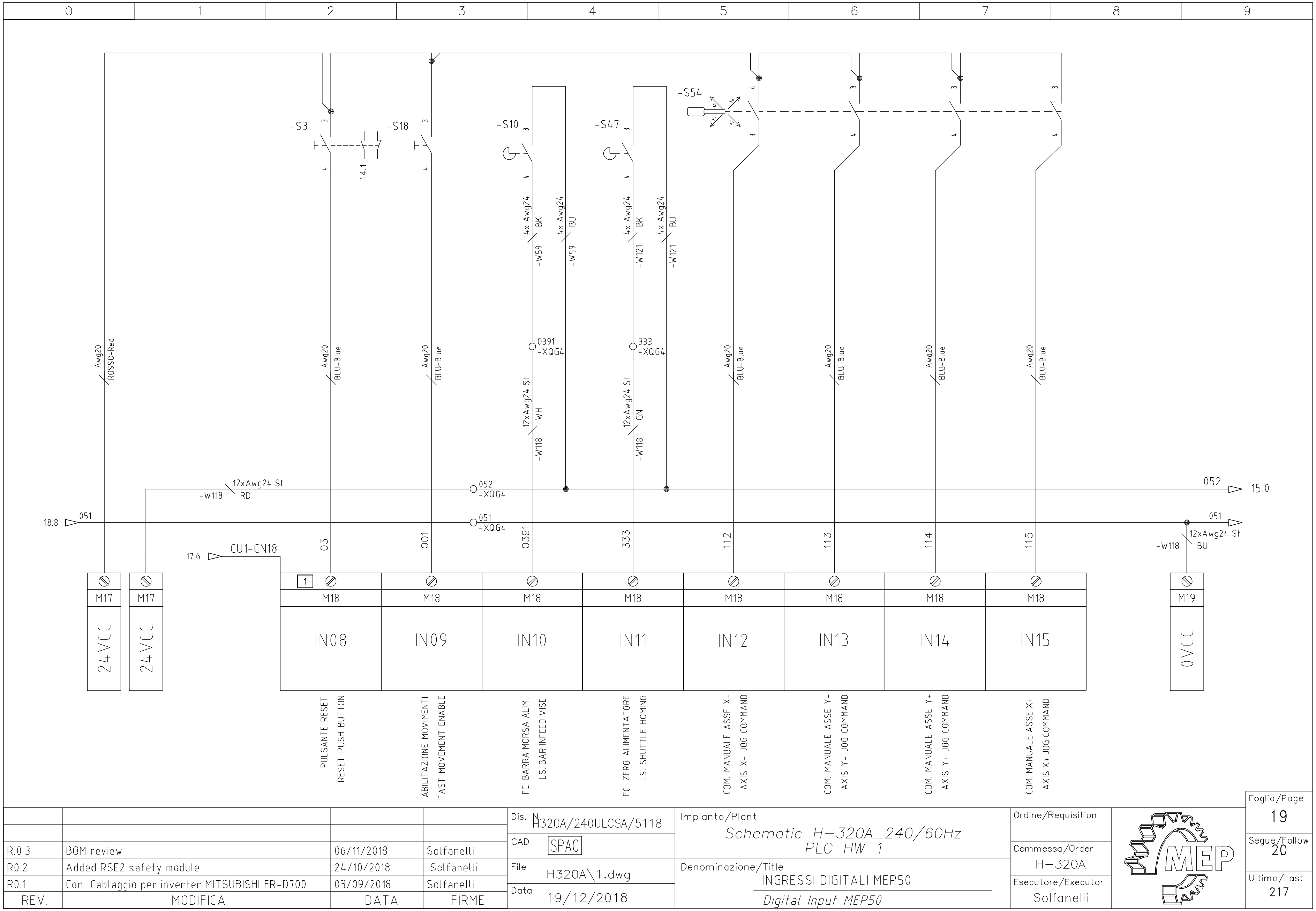
0
1
2
3
4
5
6
7
8
9
-S3
-S18
14.1
-S10
-S47
-S54
4x Awg24
BK
-W59
4x Awg24
BU
-W59
4x Awg24
BK
-W121
4x Awg24
BU
-W121
0391
-XQG4
333
-XQG4
12xAwg24 St
WH
-W118
12xAwg24 St
GN
-W118
Awg20
ROSSO-Red
Awg20
BLU-Blue
12xAwg24 St
-W118
RD
052
-XQG4
051
-XQG4
052
15.0
18.8
051
051
12xAwg24 St
-W118
BU
17.6
CU1-CN18
03
001
0391
333
112
113
114
115
1
M17
24VCC
M17
24VCC
M18
IN08
M18
IN09
M18
IN10
M18
IN11
M18
IN12
M18
IN13
M18
IN14
M18
IN15
M19
0VCC
PULSANTE RESET
RESET PUSH BUTTON
ABILITAZIONE MOVIMENTI
FAST MOVEMENT ENABLE
FC. BARRA MORSA ALIM.
LS. BAR INFEED VISE
FC. ZERO ALIMENTATORE
LS. SHUTTLE HOMING
COM. MANUALE ASSE X-
AXIS X- JOG COMMAND
COM. MANUALE ASSE Y-
AXIS Y- JOG COMMAND
COM. MANUALE ASSE Y+
AXIS Y+ JOG COMMAND
COM. MANUALE ASSE X+
AXIS X+ JOG COMMAND
R.0.3
BOM review
06/11/2018
Solfanelli
R0.2.
Added RSE2 safety module
24/10/2018
Solfanelli
R0.1
Con Cablaggio per inverter MITSUBISHI FR-D700
03/09/2018
Solfanelli
REV.
MODIFICA
DATA
FIRME
Dis. N.
H320A/240ULCSA/5118
CAD
SPAC
File
H320A\1.dwg
Data
19/12/2018
Impianto/Plant
Schematic H-320A_240/60Hz
PLC HW 1
Denominazione/Title
INGRESSI DIGITALI MEP50
Digital Input MEP50
Ordine/Requisition
Commessa/Order
H-320A
Esecutore/Executor
Solfanelli
MEP
Foglio/Page
19
Segue/Follow
20
Ultimo/Last
217

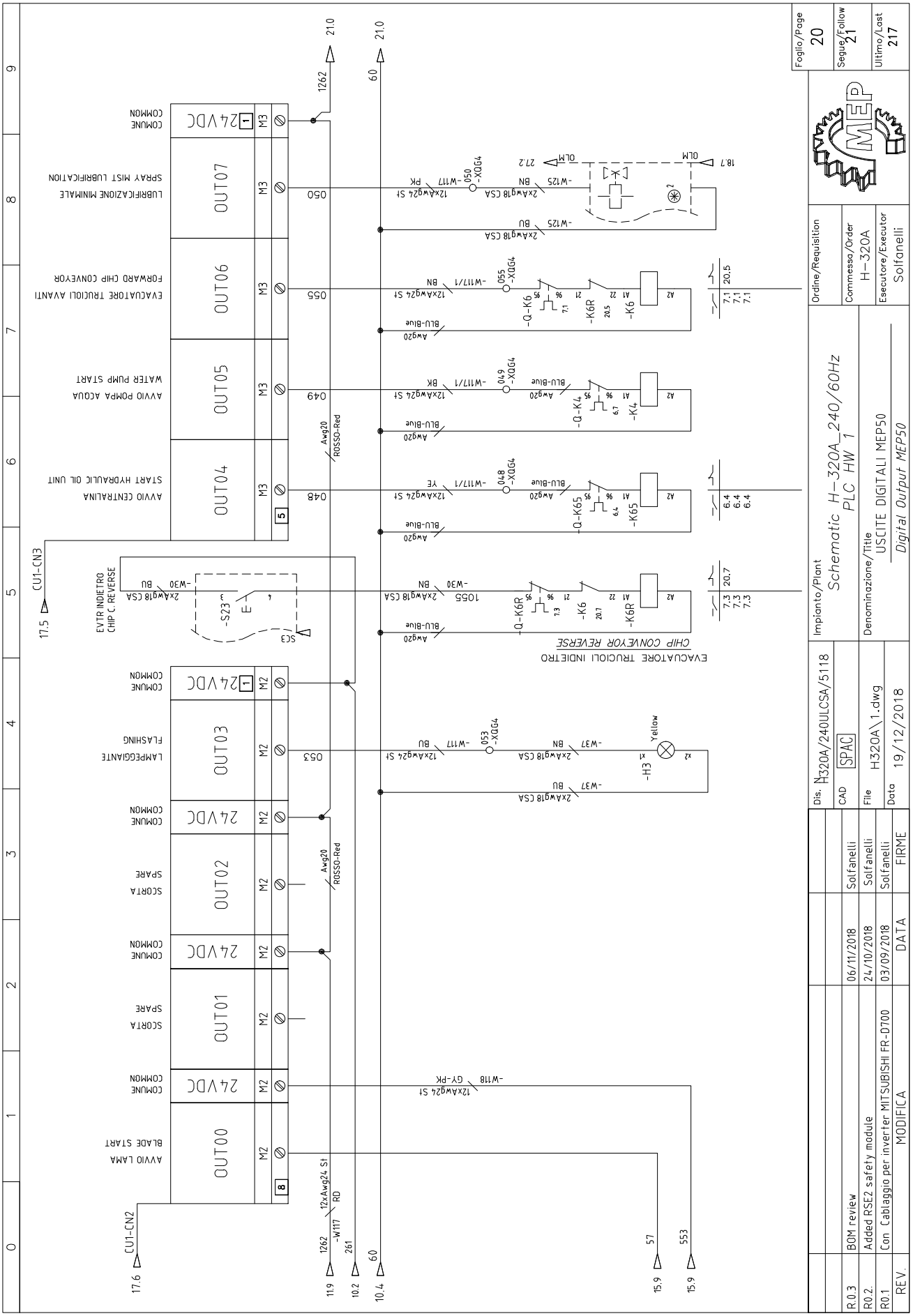
Foglio/Page 20
Segue/Follow 21
Ultimo/Last 217
Ordine/Requisition
Commessa/Order H-320A
Esecutore/Executor Solfanelli
Impianto/Plant
Schematic H-320A_240/60Hz
PLC HW 1
Denominazione/Title
USCITE DIGITALI MEP50
Digital Output MEP50
Dis. H320A/240ULCSA/5118
CAD SPAC
File H320A\1.dwg
Data 19/12/2018
R0.3 BOM review 06/11/2018 Solfanelli
R0.2. Added RSE2 safety module 24/10/2018 Solfanelli
R0.1 Con Cablaggio per inverter MITSUBISHI FR-D700 03/09/2018 Solfanelli
REV. MODIFICA DATA FIRME
OUT00 AVVIO LAMA BLADE START
OUT01 SCORTA SPARE
OUT02 SCORTA SPARE
OUT03 LAMPEGGIANTE FLASHING
OUT04 AVVIO CENTRALINA START HYDRAULIC OIL UNIT
OUT05 AVVIO POMPA ACQUA WATER PUMP START
OUT06 EVACUATORE TRUCIOLI AVANTI FORWARD CHIP CONVEYOR
OUT07 LUBRIFICAZIONE MINIMALE SPRAY MIST LUBRIFICATION
24VDC COMUNE COMMON
EVTR INDIETRO CHIP C.REVERSE
EVACUATORE TRUCIOLI INDIETRO CHIP CONVEYOR REVERSE
CU1-CN2
CU1-CN3
-H3 Yellow
-S23
-K4
-K6
-K6R
-K65
-Q-K4
-Q-K6
-Q-K6R
-Q-K65
-XQG4
-W117
-W125
-W30
-W37
-W118
Awg20 ROSSO-Red
Awg20 BLU-Blue
2xAwg18 CSA
12xAwg24 St
12xAwg24 St GY-PK
12xAwg24 St PK
12xAwg24 St BK
12xAwg24 St YE
12xAwg24 St BU
12xAwg24 St BN
12xAwg24 St RD
OLM
21.0
6.0
1262
261
57
553
17.5
17.6
11.9
10.2
10.4
15.9
18.7
27.2

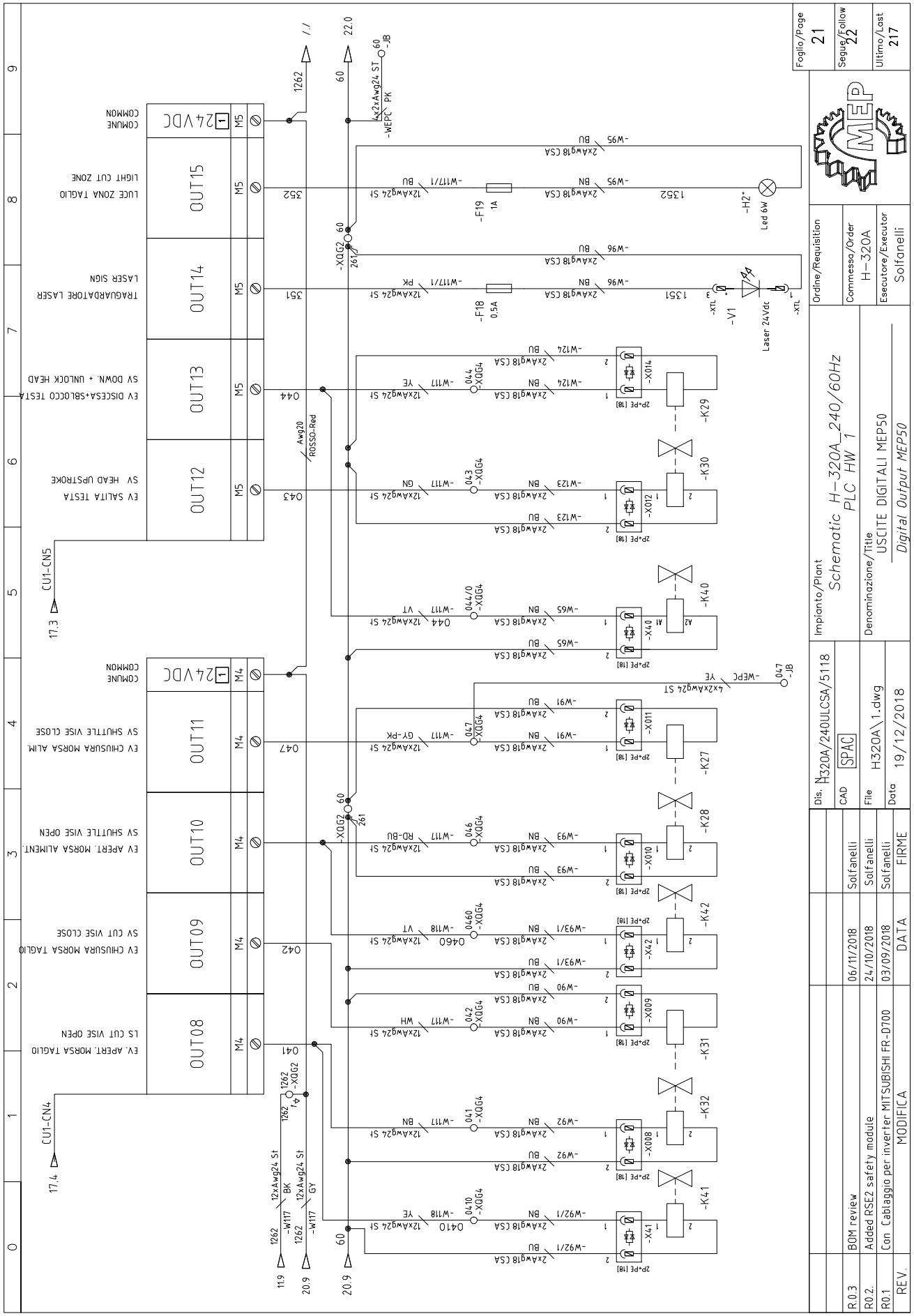
Foglio/Page 21
Segue/Follow 22
Ultimo/Last 217
Impianto/Plant
Schematic H-320A_240/60Hz
PLC HW 1
Denominazione/Title
USCITE DIGITALI MEP50
Digital Output MEP50
Ordine/Requisition
Commessa/Order H-320A
Esecutore/Executor Solfanelli
Dis. H320A/240ULCSA/5118
CAD SPAC
File H320A\1.dwg
Data 19/12/2018
R0.3 BOM review 06/11/2018 Solfanelli
R0.2. Added RSE2 safety module 24/10/2018 Solfanelli
R0.1 Con Cablaggio per inverter MITSUBISHI FR-D700 03/09/2018 Solfanelli
REV. MODIFICA DATA FIRME
OUT08
OUT09
OUT10
OUT11
OUT12
OUT13
OUT14
OUT15
24VDC
COMUNE COMMON
EV. APERT. MORSA TAGLIO LS CUT VISE OPEN
EV CHIUSURA MORSA TAGLIO SV CUT VISE CLOSE
EV APERT. MORSA ALIMENT. SV SHUTTLE VISE OPEN
EV CHIUSURA MORSA ALIM. SV SHUTTLE VISE CLOSE
EV SALITA TESTA SV HEAD UPSTROKE
EV DISCESA+SBLOCCO TESTA SV DOWN. + UNLOCK HEAD
TRAGUARDATORE LASER LASER SIGN
LUCE ZONA TAGLIO LIGHT CUT ZONE
COMUNE COMMON
CU1-CN4
CU1-CN5
-K41
-K32
-K31
-K42
-K28
-K27
-K40
-K30
-K29
-F18 0,5A
-F19 1A
-V1
Laser 24Vdc
-H2*
Led 6W
-WEPC
-JB
4x2xAwg24 ST
Awg20 ROSSO-Red

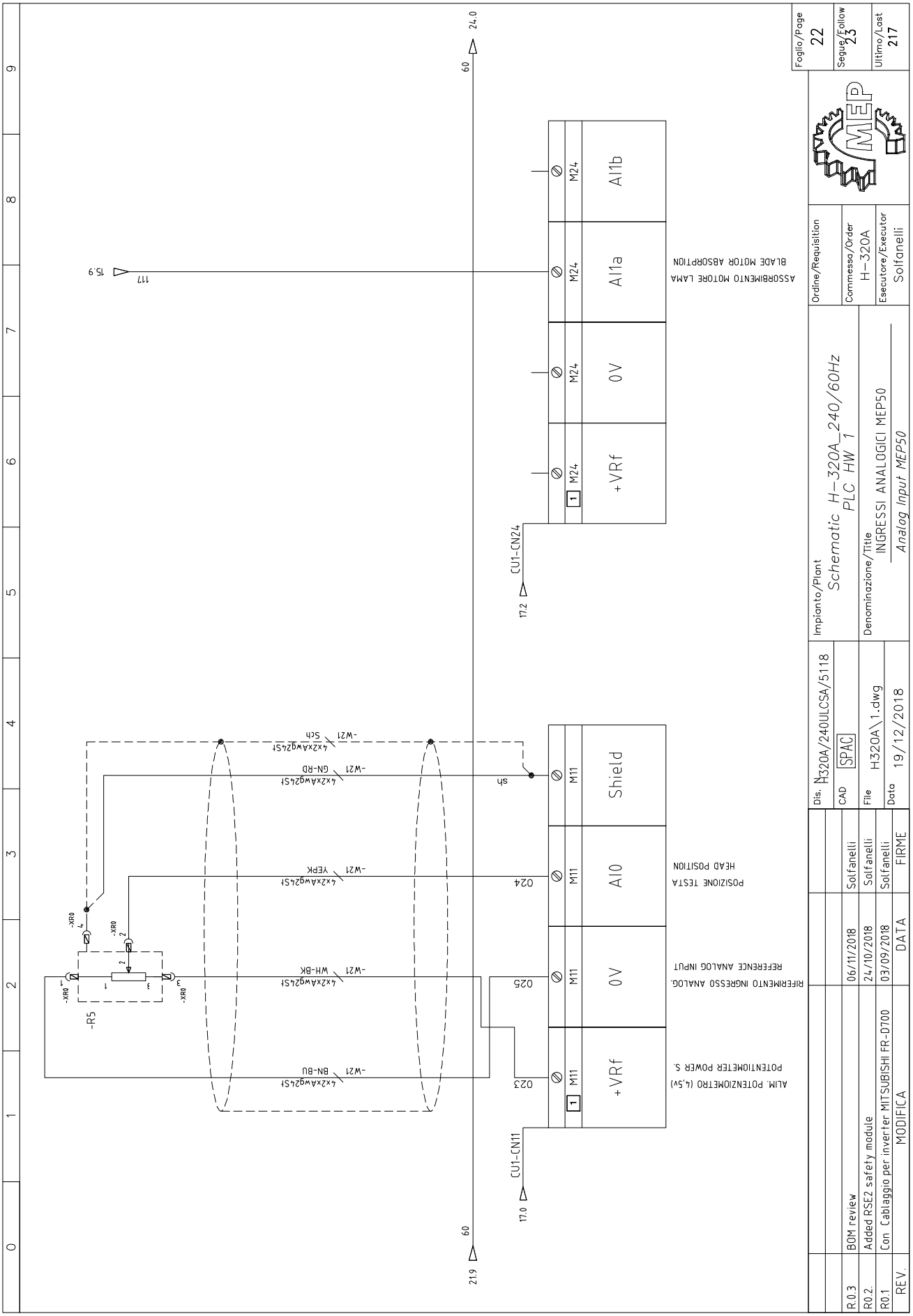
Foglio/Page 22
Segue/Follow 23
Ultimo/Last 217
Ordine/Requisition
Commessa/Order H-320A
Esecutore/Executor Solfanelli
Impianto/Plant
Schematic H-320A_240/60Hz
PLC HW 1
Denominazione/Title
INGRESSI ANALOGICI MEP50
Analog Input MEP50
Dis. H320A/240ULCSA/5118
CAD SPAC
File H320A\1.dwg
Data 19/12/2018
R0.3 BOM review 06/11/2018 Solfanelli
R0.2. Added RSE2 safety module 24/10/2018 Solfanelli
R0.1 Con Cablaggio per inverter MITSUBISHI FR-D700 03/09/2018 Solfanelli
REV. MODIFICA DATA FIRME
ASSORBIMENTO MOTORE LAMA
BLADE MOTOR ABSORPTION
POSIZIONE TESTA
HEAD POSITION
RIFERIMENTO INGRESSO ANALOG.
REFERENCE ANALOG INPUT
ALIM. POTENZIOMETRO (4,5V)
POTENTIOMETER POWER S.
AI1b
AI1a
0V
+VRf
AI0
Shield
CU1-CN24
CU1-CN11
-R5

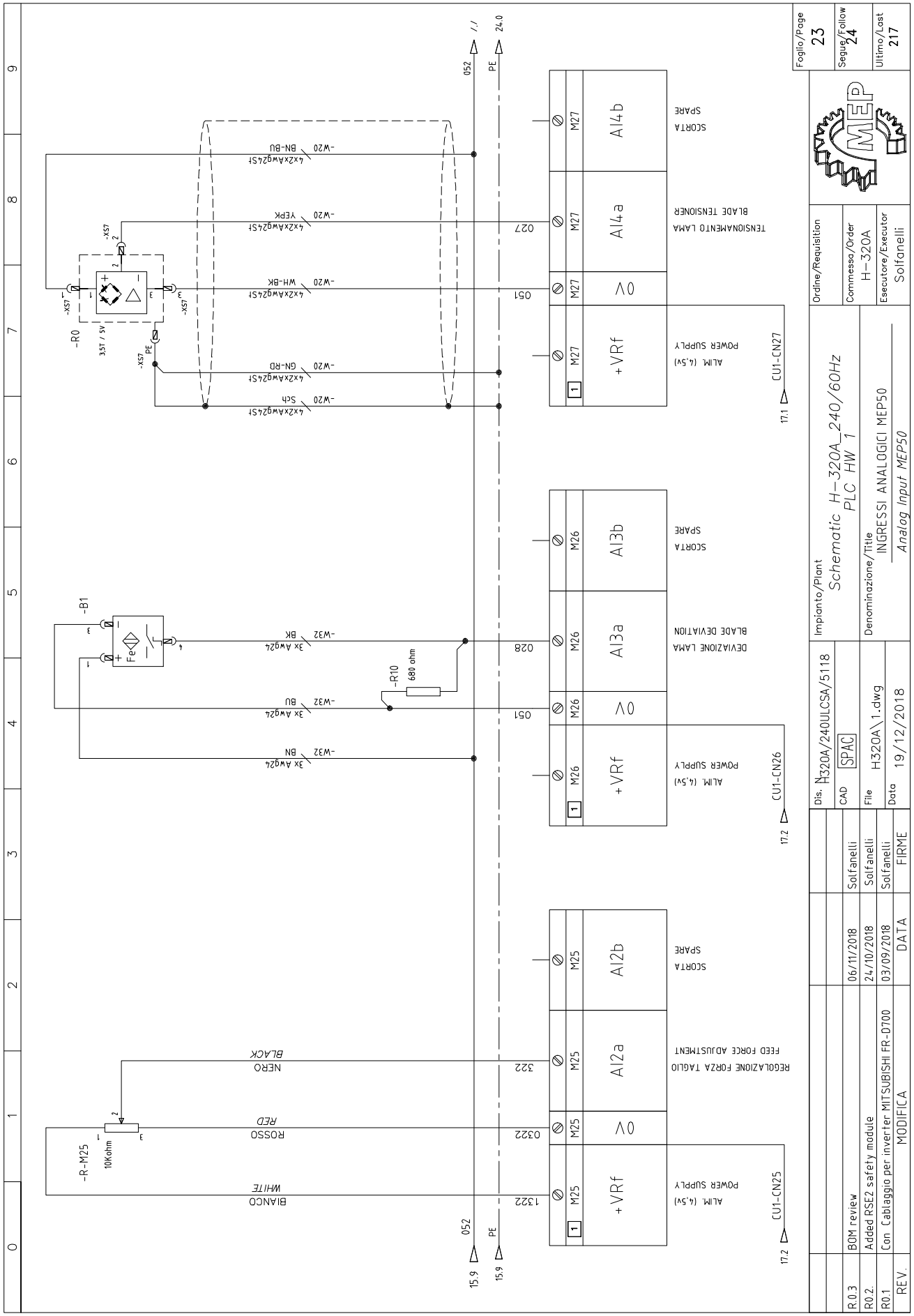
Foglio/Page 23
Segue/Follow 24
Ultimo/Last 217
Ordine/Requisition
Commessa/Order H-320A
Esecutore/Executor Solfanelli
Impianto/Plant
Schematic H-320A_240/60Hz
PLC HW 1
Denominazione/Title
INGRESSI ANALOGICI MEP50
Analog Input MEP50
Dis. N320A/240ULCSA/5118
CAD SPAC
File H320A\1.dwg
Data 19/12/2018
AI4b
AI4a
AI3b
AI3a
AI2b
AI2a
SCORTA
SPARE
TENSIONAMENTO LAMA
BLADE TENSIONER
DEVIAZIONE LAMA
BLADE DEVIATION
REGOLAZIONE FORZA TAGLIO
FEED FORCE ADJUSTMENT
ALIM. (4,5V)
POWER SUPPLY
+VRf
CU1-CN27
CU1-CN26
CU1-CN25
-R0
-B1
-R10
680 ohm
-R-M25
10Kohm
BIANCO
WHITE
ROSSO
RED
NERO
BLACK
BN-BU
YEPK
WH-BK
GN-RD
Sch
BU
BK
BN
052
PE
24.0
15.9
17.1
17.2
R0.3 BOM review 06/11/2018 Solfanelli
R0.2. Added RSE2 safety module 24/10/2018 Solfanelli
R0.1 Con Cablaggio per inverter MITSUBISHI FR-D700 03/09/2018 Solfanelli
REV. MODIFICA DATA FIRME

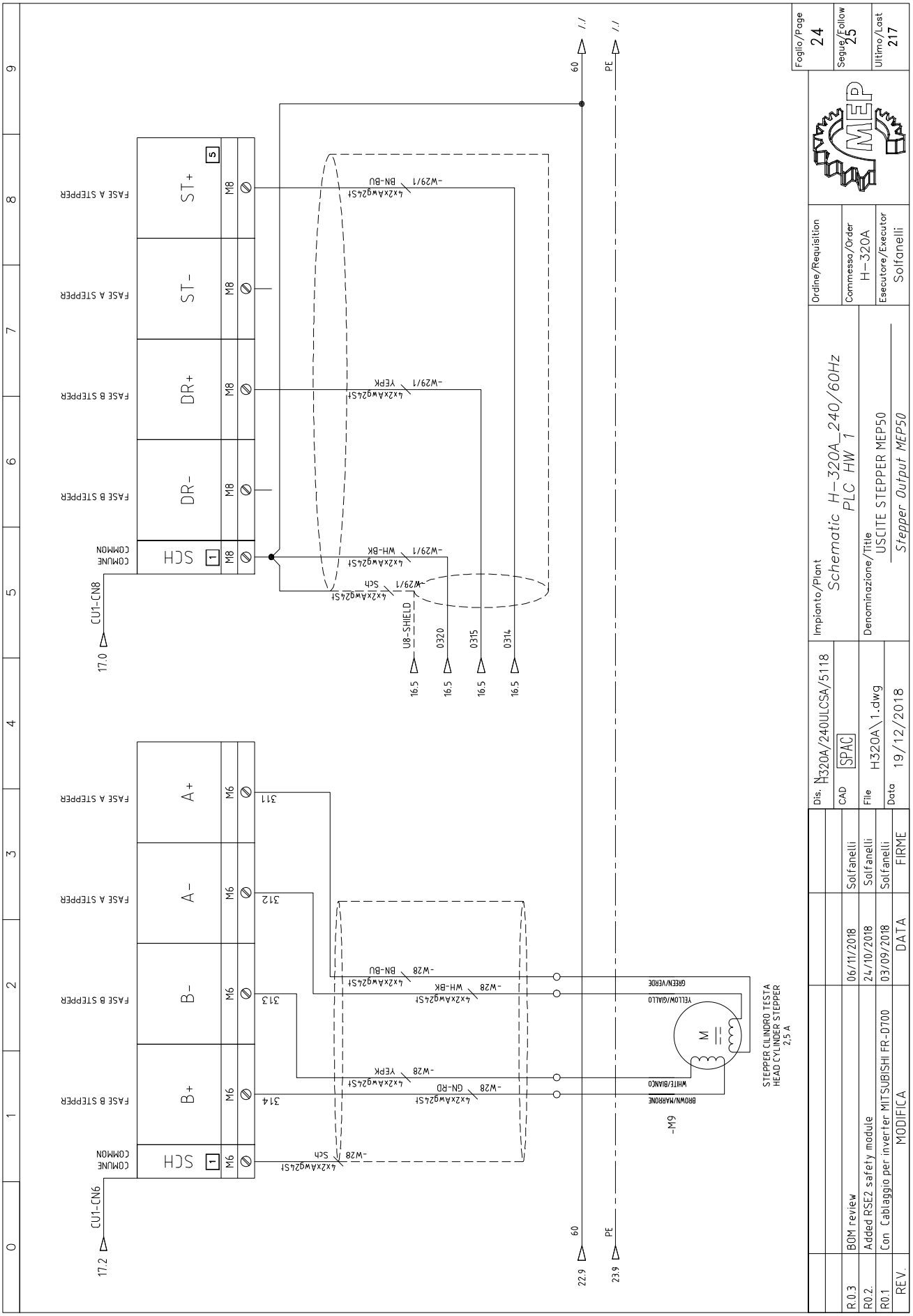
Fogli/Page 24
Segue/Follow 25
Ultimo/Last 217
Ordine/Requisition
Commessa/Order H-320A
Esecutore/Executor Solfanelli
Impianto/Plant
Schematic H-320A_240/60Hz
PLC HW 1
Denominazione/Title
USCITE STEPPER MEP50
Stepper Output MEP50
Dis. H320A/240ULCSA/5118
CAD SPAC
File H320A\1.dwg
Data 19/12/2018
R0.3 BOM review 06/11/2018 Solfanelli
R0.2. Added RSE2 safety module 24/10/2018 Solfanelli
R0.1 Con Cablaggio per inverter MITSUBISHI FR-D700 03/09/2018 Solfanelli
REV. MODIFICA DATA FIRME
SCH
COMUNE COMMON
CU1-CN6
CU1-CN8
B+
B-
A-
A+
DR-
DR+
ST-
ST+
FASE B STEPPER
FASE A STEPPER
M6
M8
-M9
STEPPER CILINDRO TESTA
HEAD CYLINDER STEPPER
2,5 A
BROWN/MARRONE
WHITE/BIANCO
YELLOW/GIALLO
GREEN/VERDE
-W28
-W29/1
4x2xAwg24St
U8-SHIELD
0314
0315
0320
311
312
313
314
60
PE

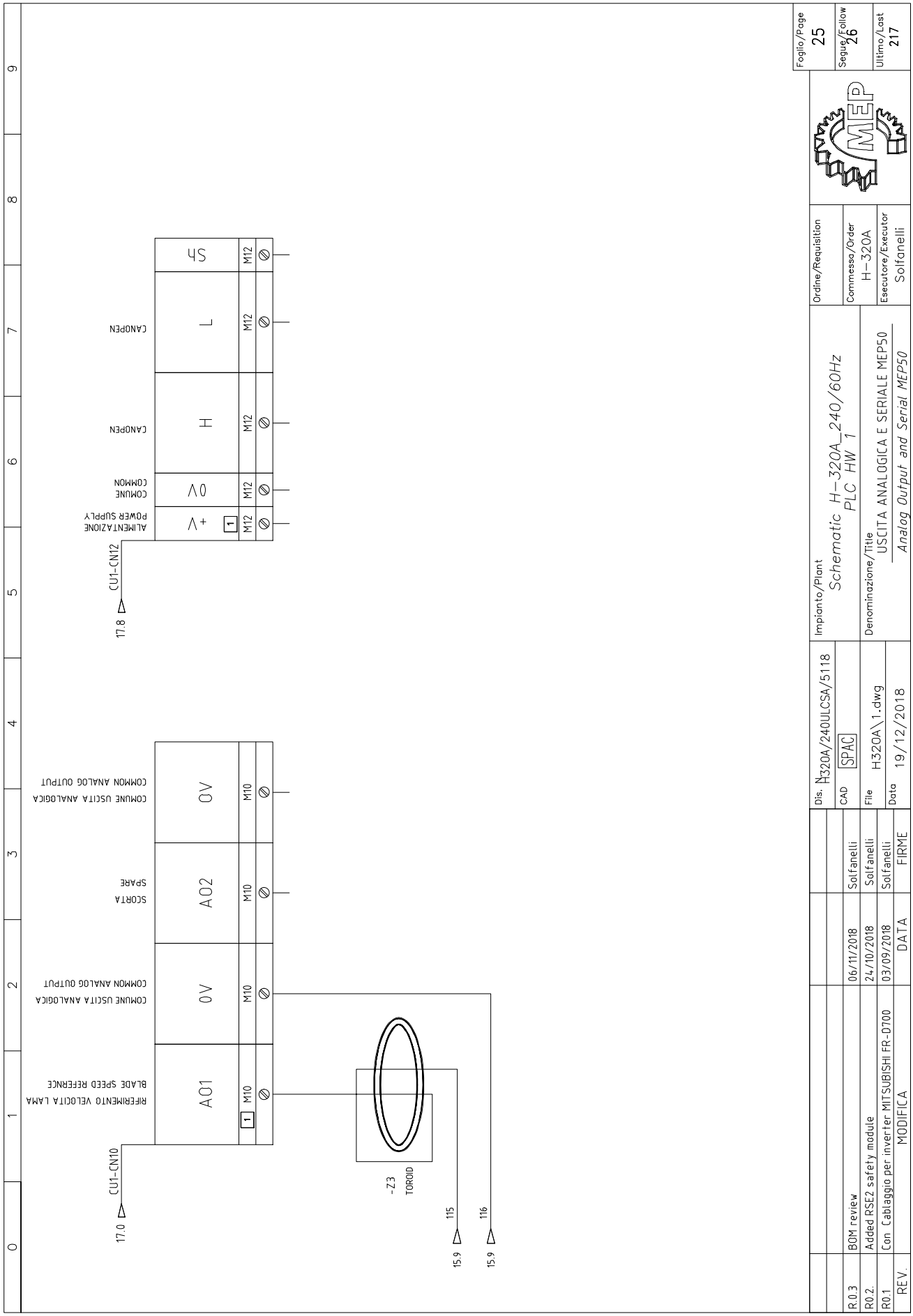
Foglio/Page 25
Segue/Follow 26
Ultimo/Last 217
Ordine/Requisition
Commessa/Order H-320A
Esecutore/Executor Solfanelli
Impianto/Plant Schematic H-320A_240/60Hz PLC HW 1
Denominazione/Title USCITA ANALOGICA E SERIALE MEP50
Analog Output and Serial MEP50
Dis. N320A/240ULCSA/5118
CAD SPAC
File H320A\1.dwg
Data 19/12/2018
R0.3 BOM review 06/11/2018 Solfanelli
R0.2. Added RSE2 safety module 24/10/2018 Solfanelli
R0.1 Con Cablaggio per inverter MITSUBISHI FR-D700 03/09/2018 Solfanelli
REV. MODIFICA DATA FIRME
CU1-CN12
17.8
+V
ALIMENTAZIONE POWER SUPPLY
0V
COMUNE COMMON
H
CANOPEN
L
CANOPEN
SH
CU1-CN10
17.0
AO1
RIFERIMENTO VELOCITÀ LAMA BLADE SPEED REFERENCE
0V
COMUNE USCITA ANALOGICA COMMON ANALOG OUTPUT
AO2
SCORTA SPARE
0V
COMUNE USCITA ANALOGICA COMMON ANALOG OUTPUT
M10
M12
-Z3
TOROID
115
116
15.9
15.9

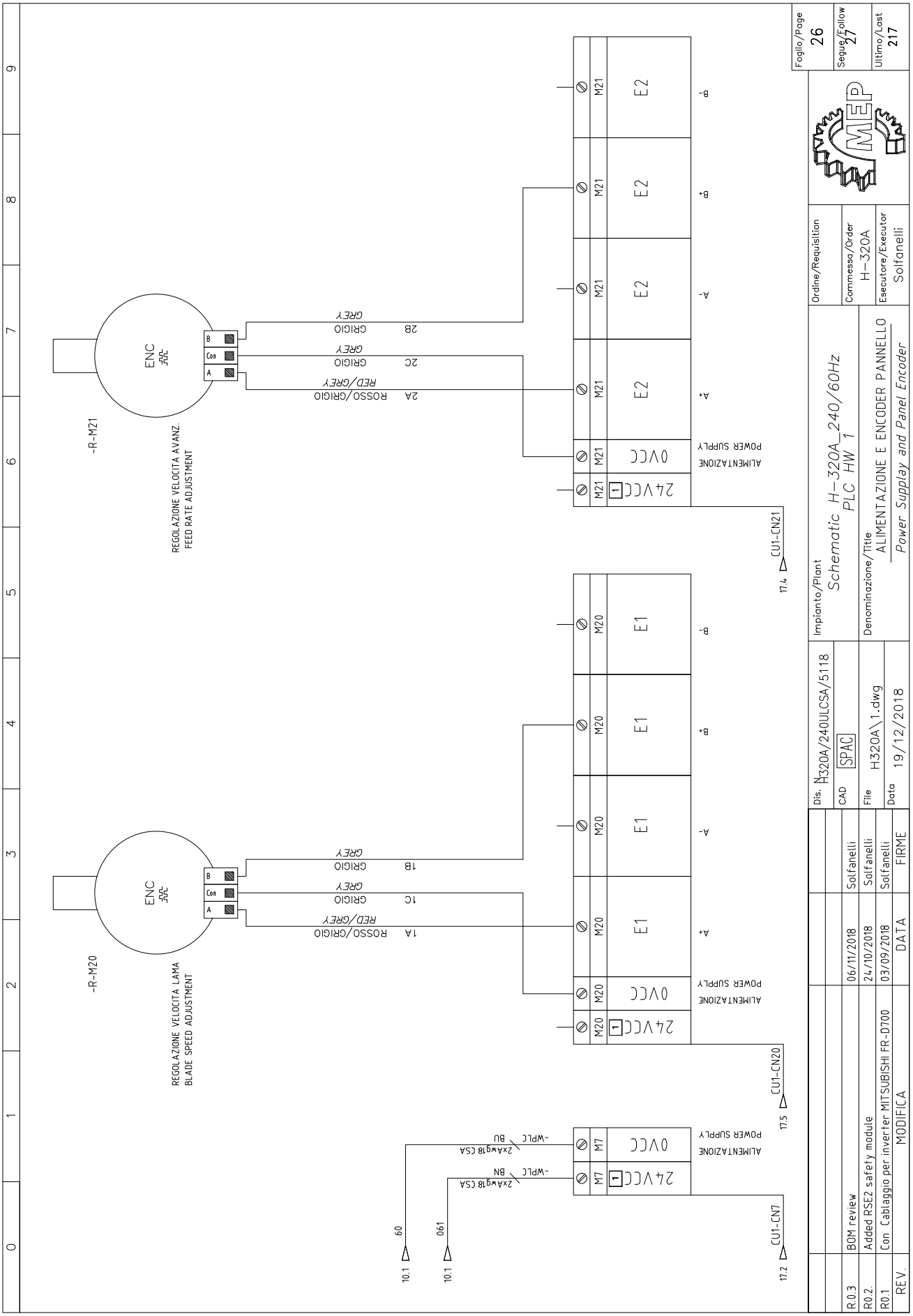
-R-M21
ENC
B
Con
A
REGOLAZIONE VELOCITA AVANZ.
FEED RATE ADJUSTMENT
2A ROSSO/GRIGIO RED/GREY
2C GRIGIO GREY
2B GRIGIO GREY
M21
E2
A+
A-
B+
B-
24VCC
0VCC
ALIMENTAZIONE POWER SUPPLY
CU1-CN21
17.4
-R-M20
REGOLAZIONE VELOCITA LAMA
BLADE SPEED ADJUSTMENT
1A ROSSO/GRIGIO RED/GREY
1C GRIGIO GREY
1B GRIGIO GREY
M20
E1
CU1-CN20
17.5
M7
-WPLC BN 2xAwg18 CSA
-WPLC BU 2xAwg18 CSA
CU1-CN7
17.2
60
10.1
061
10.1
Fogli/Page 26
Segue/Follow 27
Ultimo/Last 217
Ordine/Requisition
Commessa/Order H-320A
Esecutore/Executor Solfanelli
Impianto/Plant
Schematic H-320A_240/60Hz
PLC HW 1
Denominazione/Title
ALIMENTAZIONE E ENCODER PANNELLO
Power Supplay and Panel Encoder
Dis. H320A/240ULCSA/5118
CAD SPAC
File H320A\1.dwg
Data 19/12/2018
R0.3 BOM review 06/11/2018 Solfanelli
R0.2. Added RSE2 safety module 24/10/2018 Solfanelli
R0.1 Con. Cablaggio per inverter MITSUBISHI FR-D700 03/09/2018 Solfanelli
REV. MODIFICA DATA FIRME

0	1	2	3	4	5	6	7	8	9

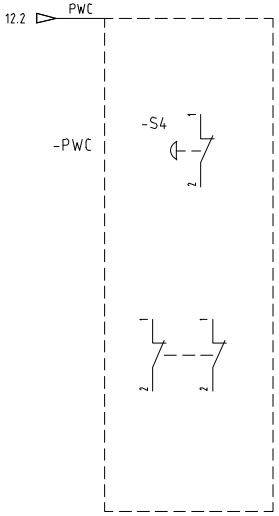

OPTIONAL RULLIERE MOTORIZZATE
OPTIONAL POWER CONVEYOR

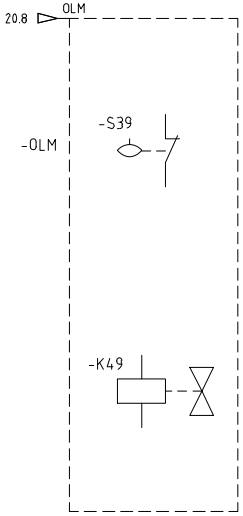

OPTIONAL LUBRIFICAZIONE MINIMALE
OPTIONAL MICRO-LUBRIFICATION

REV.	MODIFICA	DATA	FIRME
R.0.3	BOM review	06/11/2018	Solfanelli
R0.2.	Added RSE2 safety module	24/10/2018	Solfanelli
R0.1	Con Cablaggio per inverter MITSUBISHI FR-D700	03/09/2018	Solfanelli

Dis. N. H320A/240ULCSA/5118
CAD SPAC
File H320A\1.dwg
Data 19/12/2018

Impianto/Plant
Schematic H-320A_240/60Hz
PLC HW 1

Denominazione/Title
OPTIONALS
Optional

Ordine/Requisition
Commessa/Order H-320A
Esecutore/Executor Solfanelli

MEP

Foglio/Page 27
Segue/Follow 28
Ultimo/Last 217

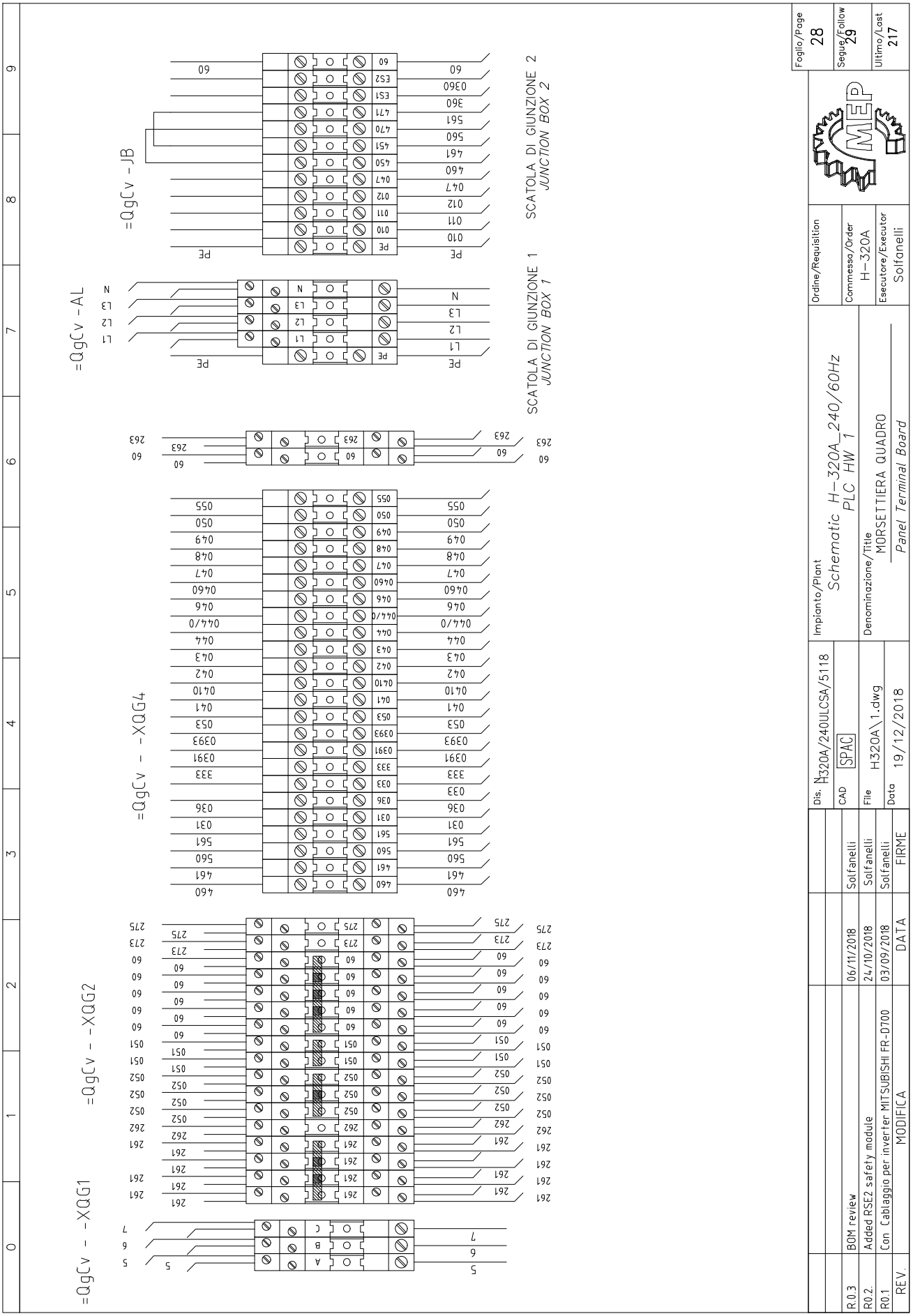
=QgCv - -XQG1
=QgCv - -XQG2
=QgCv - -XQG4
=QgCv -AL
=QgCv -JB
SCATOLA DI GIUNZIONE 1
JUNCTION BOX 1
SCATOLA DI GIUNZIONE 2
JUNCTION BOX 2
Foglio/Page 28
Segue/Follow 29
Ultimo/Last 217
Ordine/Requisition
Commessa/Order H-320A
Esecutore/Executor Solfanelli
Impianto/Plant
Schematic H-320A_240/60Hz
PLC HW 1
Denominazione/Title
MORSETTIERA QUADRO
Panel Terminal Board
Dis. H320A/240ULCSA/5118
CAD SPAC
File H320A\1.dwg
Data 19/12/2018
R0.3 BOM review 06/11/2018 Solfanelli
R0.2. Added RSE2 safety module 24/10/2018 Solfanelli
R0.1 Con Cablaggio per inverter MITSUBISHI FR-D700 03/09/2018 Solfanelli
REV. MODIFICA DATA FIRME

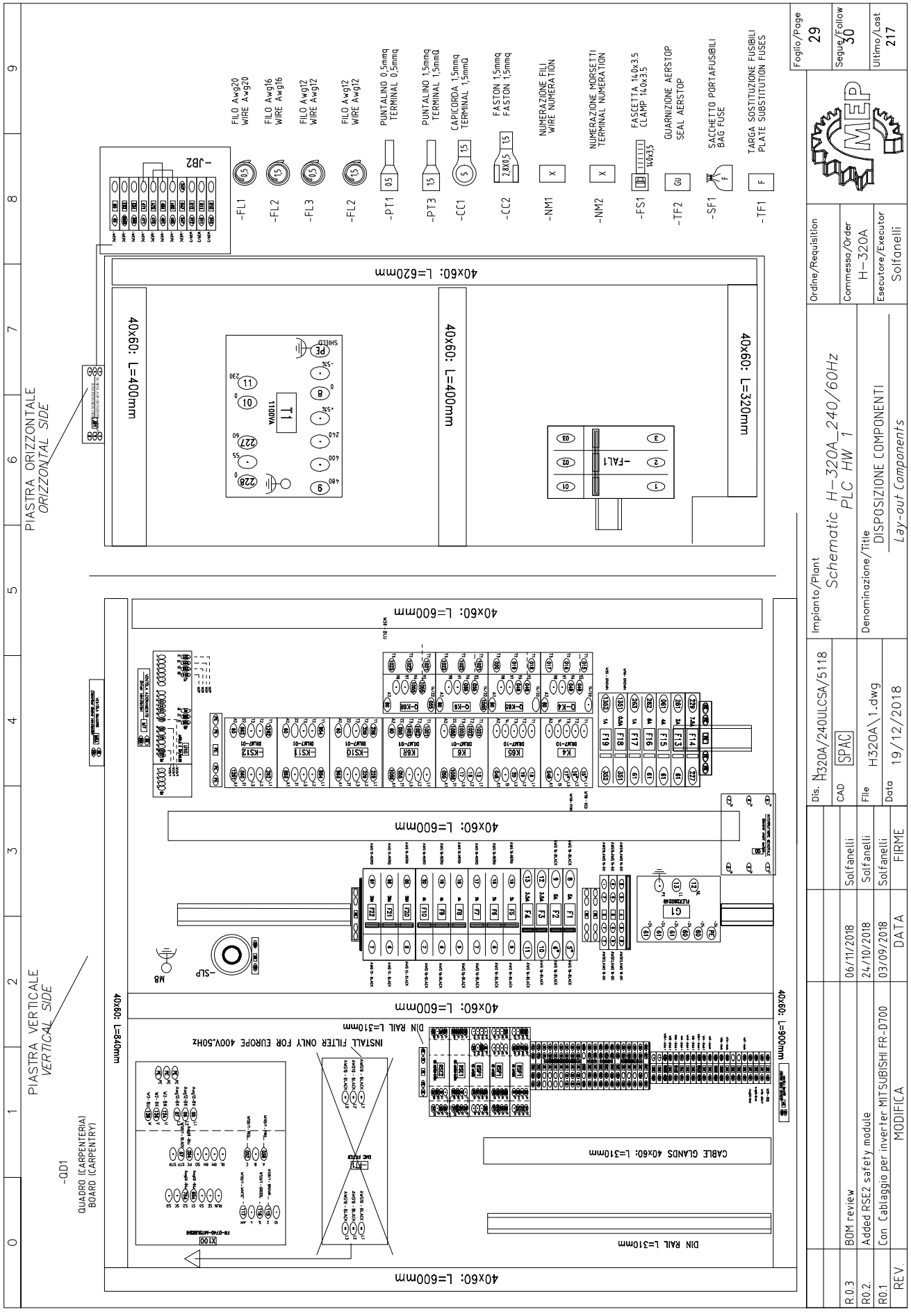
PIASTRA ORIZZONTALE
ORIZZONTAL SIDE
PIASTRA VERTICALE
VERTICAL SIDE
-QD1
QUADRO (CARPENTERIA)
BOARD (CARPENTRY)
FILO Awg20
WIRE Awg20
FILO Awg16
WIRE Awg16
FILO Awg12
WIRE Awg12
PUNTALINO 0,5mmq
TERMINAL 0,5mmq
PUNTALINO 1,5mmq
TERMINAL 1,5mmQ
CAPICORDA 1,5mmq
TERMINAL 1,5mmQ
FASTON 1,5mmq
FASTON 1,5mmq
NUMERAZIONE FILI
WIRE NUMERATION
NUMERAZIONE MORSETTI
TERMINAL NUMERATION
FASCETTA 14,0x3,5
CLAMP 140x3,5
GUARNIZIONE AERSTOP
SEAL AERSTOP
SACCHETTO PORTAFUSIBILI
BAG FUSE
TARGA SOSTITUZIONE FUSIBILI
PLATE SUBSTITUTION FUSES
-JB2
-FL1
-FL2
-FL3
-FL2
-PT1
-PT3
-CC1
-CC2
-NM1
-NM2
-FS1
-TF2
-SF1
-TF1
40x60: L=620mm
40x60: L=400mm
40x60: L=400mm
40x60: L=320mm
T1
1100VA
-FAL1
40x60: L=600mm
40x60: L=600mm
40x60: L=600mm
40x60: L=600mm
40x60: L=600mm
40x60: L=800mm
40x60: L=900mm
-SLP
M8
DIN RAIL L=310mm
INSTALL FILTER ONLY FOR EUROPE 400V,50HZ
CABLE GLANDS 40x60: L=310mm
DIN RAIL L=310mm
Foglio/Page 29
Segue/Follow 30
Ultimo/Last 217
Ordine/Requisition
Commessa/Order H-320A
Esecutore/Executor Solfanelli
Impianto/Plant
Schematic H-320A_240/60Hz
PLC HW 1
Denominazione/Title
DISPOSIZIONE COMPONENTI
Lay-out Components
Dis. H320A/240ULCSA/5118
CAD SPAC
File H320A\1.dwg
Data 19/12/2018
R0.3 BOM review 06/11/2018 Solfanelli
R0.2. Added RSE2 safety module 24/10/2018 Solfanelli
R0.1 Con Cablaggio per inverter MITSUBISHI FR-D700 03/09/2018 Solfanelli
REV. MODIFICA DATA FIRME

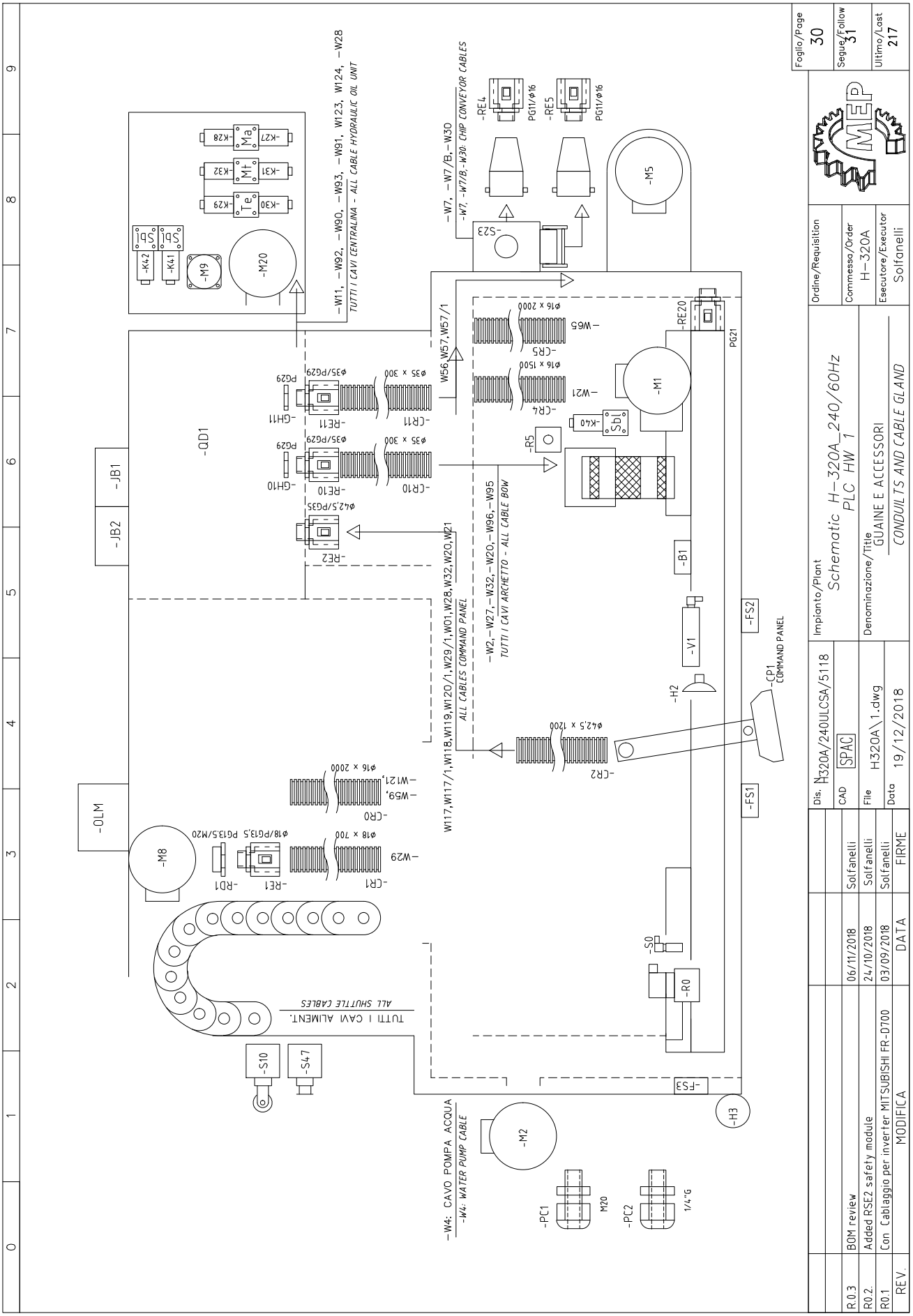
Foglio/Page 30
Segue/Follow 31
Ultimo/Last 217
Ordine/Requisition
Commessa/Order H-320A
Esecutore/Executor Solfanelli
Impianto/Plant
Schematic H-320A_240/60Hz
PLC HW 1
Denominazione/Title
GUAINE E ACCESSORI
CONDUITS AND CABLE GLAND
Dis. H320A/240ULCSA/5118
CAD SPAC
File H320A\1.dwg
Data 19/12/2018
R0.3 BOM review 06/11/2018 Solfanelli
R0.2. Added RSE2 safety module 24/10/2018 Solfanelli
R0.1 Con Cablaggio per inverter MITSUBISHI FR-D700 03/09/2018 Solfanelli
REV. MODIFICA DATA FIRME
-W11, -W92, -W90, -W93, -W91, W123, W124, -W28
TUTTI I CAVI CENTRALINA - ALL CABLE HYDRAULIC OIL UNIT
-W7, -W7/B, -W30
-W7; -W7/B; W30 CHIP CONVEYOR CABLES
-W2, -W27, -W32, -W20, -W96, -W95
TUTTI I CAVI ARCHETTO - ALL CABLE BOW
W117,W117/1,W118,W119,W120/1,W29/1,W01,W28,W32,W20,W21
ALL CABLES COMMAND PANEL
W56,W57,W57/1
TUTTI I CAVI ALIMENT.
ALL SHUTTLE CABLES
-W4: CAVO POMPA ACQUA
-W4: WATER PUMP CABLE
-QD1
-JB1
-JB2
-OLM
-M1
-M2
-M5
-M8
-M9
-M20
-CP1 COMMAND PANEL
-FS1
-FS2
-FS3
-H2
-H3
-V1
-B1
-R0
-R5
-S0
-S10
-S47
-S23
-RE4
-RE5
-RE20
-PC1
-PC2
-CR1
-CR2
-CR4
-CR5
-CR10
-CR11
-CR0
-W29
-W21
-W65
-W59
-W121
-RE1
-RE2
-RE10
-RE11
-RD1
-GH10
-GH11
-K40
-K41
-K42
-K27
-K28
-K29
-K30
-K31
-K32
Ma
Mt
Te
Sbl
Ips
PG11/Ø16
PG21
PG29
Ø35/PG29
Ø42,5/PG35
Ø18/PG13,5 PG13,5/M20
Ø18 x 700
Ø16 x 2000
Ø16 x 1500
Ø35 x 300
Ø42,5 x 1200
M20
1/4"G

CAVI ESTERNI \ EXTERNAL CABLES

QUADRO \ BOARD									DESTINAZIONE \ LOCATION			
QUADRO BOARD	FOGLIO SHEET	NR. MORSETTO TERMINAL NO.	NR. FILO CONDUCTOR NO.	ID SUL CAVO ID IN CABLE	CAVO CABLE	LUNGHEZZA LENGHT [mt]	DISTURBO NOISE LEVEL	ID SUL CAVO ID IN CABLE	NR. FILO CONDUCTOR NO.	NR. MORSETTO TERMINAL NO.	FOGLIO SHEET	QUADRO BOARD
=QgCv -AL	5/1	1	1	BN	-W1 E001964 Main Power supply cable	3,5 mt		BN	1		5/4	=QgCv -Q0
=QgCv -AL	5/2	2	2	BK				BK	2		5/4	=QgCv -Q0
=QgCv -AL	5/2	3	3	BU				BU	3		5/4	=QgCv -Q0
=QgCv -XQGPE	5/3	5	PE	GNYE				GNYE	PE	5_1	5/3	=QgCv -XQGPE
=QgCv -Q-K65	6/3	T1	018	BN	-W11 E001984 Hydraulic motor pump cable			BN	018	U	6/3	=BmMep -M20
=QgCv -Q-K65	6/3	T2	019	BK				BK	019	V	6/3	=BmMep -M20
=QgCv -Q-K65	6/4	T3	020	BU				BU	020	W	6/4	=BmMep -M20
=QgCv -XQGPE	6/4	5	PE	GNYE				GNYE	PE	PE	6/4	=BmMep -M20
=QgCv -XQG2	21/1	1262_1	1262	BK	-W117 E001906. Auxiliary output signals cable			BK	1262	2	11/7	=QgCv -KS12
=QgCv -XQG4	21/0	041	041	BN				BN	041	M4	21/1	OUT08
=QgCv -XQG2	21/1	1262_1	1262	GY				GY	1262	M3	20/8	24VDC
=QgCv -XQG4	20/3	053	053	BU				BU	053	M2	20/3	OUT03
=QgCv -XQG4	21/5	043	043	GN				GN	043	M5	21/5	OUT12
=QgCv -XQG4	21/6	044	044	YE				YE	044	M5	21/6	OUT13
=QgCv -XQG4	21/1	042	042	WH				WH	042	M4	21/2	OUT09
=QgCv -XQG4	21/4	044/0	044	VT				VT	044	M5	21/6	OUT13
=QgCv -KS12	11/7	2	1262	RD				RD	1262	M2	20/2	24VDC
=QgCv -XQG4	20/8	050	050	PK				PK	050	M3	20/8	OUT07
=QgCv -XQG4	21/3	047	047	GY-PK				GY-PK	047	M4	21/3	OUT11
=QgCv -XQG4	21/3	046	0460	RD-BU				RD-BU	0460	M4	21/3	OUT10
				Sch				Sch				
=QgCv -XQG4	20/6	049	049	BK	-W117/1 E001906. Auxiliary output signals cable			BK	049	M3	20/6	OUT05
=QgCv -XQG4	20/7	055	055	BN				BN	055	M3	20/7	OUT06
				GY				GY				
=QgCv -F19	21/8		352	BU				BU	352	M5	21/8	OUT15
				GN				GN				
=QgCv -XQG4	20/5	048	048	YE				YE	048	M3	20/5	OUT04
=QgCv -XQG4	19/3	051	051	WH				WH	051	051	18/6	=QgCv -XQG2
				VT				VT				
=QgCv -XQG2	15/7	052_2	052	RD				RD	052	052	18/2	=QgCv -XQG2
=QgCv -F18	21/7		351	PK				PK	351	M5	21/7	OUT14
				GY-PK				GY-PK				
				RD-BU				RD-BU				
				Sch				Sch				

REV.	MODIFICA	DATA	FIRME
R.0.3	BOM review	06/11/2018	Solfanelli
R0.2.	Added RSE2 safety module	24/10/2018	Solfanelli
R0.1	Con Cablaggio per inverter MITSUBISHI FR-D700	03/09/2018	Solfanelli

Dis. N. H320A/240ULCSA/5118
CAD SPAC
File H320A\1.dwg
Data 19/12/2018

Impianto/Plant: Schematic H-320A_240/60Hz PLC HW 1
Denominazione/Title: RIASSUNTIVO CAVI
Cable summary

Ordine/Requisition
Commessa/Order: H-320A
Esecutore/Executor: Solfanelli

MEP

Foglio/Page 31
Segue/Follow 32
Ultimo/Last 217

CAVI ESTERNI \ EXTERNAL CABLES

QUADRO \ BOARD									DESTINAZIONE \ LOCATION			
QUADRO BOARD	FOGLIO SHEET	NR. MORSETTO TERMINAL NO.	NR. FILO CONDUCTOR NO.	ID SUL CAVO ID IN CABLE	CAVO CABLE	LUNGHEZZA LENGHT [mt]	DISTURBO NOISE LEVEL	ID SUL CAVO ID IN CABLE	NR. FILO CONDUCTOR NO.	NR. MORSETTO TERMINAL NO.	FOGLIO SHEET	QUADRO BOARD
			036	BK				BK	036			
=QgCv -XQG4	18/6	036 ○	0393	BN				BN	0393	M15	18/6	IN06
=QgCv -XQG4	18/5	0393 ○	031	GY				GY	031	M15	18/5	IN05
=QgCv -XQG4	18/1	031 ○	051	BU				BU	051	M15	18/1	IN00
=QgCv -XQG4	19/3	051 ○	333	GN				GN	333	M19	19/8	0VCC
=QgCv -XQG4	19/4	333 ○	???	YE				YE	???	M18	19/4	IN11
=QgCv -XQG4	21/0	0410 ○	0391	WH	-W118 E001906.			WH	0391	M4	21/1	OUT08
=QgCv -XQG4	19/3	0391 ○	0460	VT	Auxiliary input/ output signals			VT	0460	M18	19/3	IN10
=QgCv -XQG4	21/2	0460 ○	052	RD				RD	052	M4	21/3	OUT10
=QgCv -XQG4	19/3	052 ○	033	PK				PK	033	M17	19/0	24VCC
=QgCv -XQG4	18/2	033 ○	553	GY-PK				GY-PK	553	M15	18/2	IN01
=QgCv -RSE1	11/4	CS ME-03VU24		RD-BU				RD-BU		M2	20/1	24VDC
				Sch				Sch				
				BK				BK				
			271	BN				BN	271			
=QgCv -XQG2	12/0	1 ○	461	GY				GY	461	1	12/1	=QgCv -S4
=QgCv -XQG4	12/1	461 ○	272	BU				BU	272			
=QgCv -XQG2	12/0	1 ○	261	GN				GN	261			
=QgCv -XQG3	11/1	262 ○	563	YE				YE	563	3	14/2	=QgCv -S3
=QgCv -S3	14/2	4		WH	-W119 E001906.			WH			14/2	
				VT	Auxiliary signals cable			VT				
			460	RD				RD	460			
=QgCv -XQG4	12/1	460 ○		PK				PK		2	12/1	=QgCv -S4
			02	GY-PK				GY-PK	02			
	14/2		0392	RD-BU				RD-BU	0392	M15	18/3	IN02
	14/2			Sch				Sch		M15	18/4	IN03
			115	BN				BN	115			
	15/2	2	57	BK				BK	57	M10	25/1	A01
	15/3	STF		BU				BU		M2	20/0	OUT00
			116	GN				GN	116			
	15/2	5	052	RD	-W120/1 E001905.	5.5 mt		RD	052	M10	25/1	0V
=QgCv -XQG2	15/7	052_2 ○		YE	Inverter VFD auxiliary cable			YE		C	15/2	
			117	WH				WH	117			
	15/2	AM	038	PK				PK	038	M24	22/7	AI1a
	15/2	A	PE	Sch				Sch	PE	M15	18/5	IN04
=QgCv -XQGPE	5/3	5 ○										

REV.	MODIFICA	DATA	FIRME
R.0.3	BOM review	06/11/2018	Solfanelli
R0.2.	Added RSE2 safety module	24/10/2018	Solfanelli
R0.1	Con Cablaggio per inverter MITSUBISHI FR-D700	03/09/2018	Solfanelli

Dis. N. H320A/240ULCSA/5118
CAD SPAC
File H320A\1.dwg
Data 19/12/2018

Impianto/Plant: Schematic H-320A_240/60Hz PLC HW 1

Denominazione/Title: RIASSUNTIVO CAVI
Cable Summary

Ordine/Requisition
Commessa/Order H-320A
Esecutore/Executor Solfanelli

Foglio/Page 32
Segue/Follow 33
Ultimo/Last 217

CAVI ESTERNI \ EXTERNAL CABLES

QUADRO \ BOARD									DESTINAZIONE \ LOCATION			
QUADRO BOARD	FOGLIO SHEET	NR. MORSETTO TERMINAL NO.	NR. FILO CONDUCTOR NO.	ID SUL CAVO ID IN CABLE	CAVO CABLE	LUNGHEZZA LENGHT [mt]	DISTURBO NOISE LEVEL	ID SUL CAVO ID IN CABLE	NR. FILO CONDUCTOR NO.	NR. MORSETTO TERMINAL NO.	FOGLIO SHEET	QUADRO BOARD
=QgCv -XQG4	19/4	333	111	BK				BK	111	4	19/4	=BmMep -S47
=QgCv -XQG4	19/3	052	052	BU	-W121 022.0397			BU	052	3	19/4	=BmMep -S47
				BN	L.SW. Zero Homing shuttle cable			BN				
				WH				WH				
=QgCv -XQG2	18/7	52_1	8	BN	-W122 E001980			BN	8			
=QgCv -XQG4	18/6	036	106	BU	Oil level Spray mist system			BU	106			
=QgCv -XQG4	21/5	043	012	BN	-W123 E001980			BN	012	1	21/5	=QgCv -X012
=QgCv -XQG2	21/7	261	60	BU	S.V. Head feed Up			BU	60	2	21/5	=QgCv -X012
=QgCv -XQG4	21/6	044	013	BN	-W124 E001980			BN	013	1	21/6	=QgCv -X014
=QgCv -XQG2	21/3	261	60	BU	S.V. Control Head feed down			BU	60	2	21/6	=QgCv -X014
=QgCv -XQG4	20/8	050	007	BN	-W125 E001980			BN	007			
=QgCv -XQG2	10/3	60	60	BU	S.V. spray mist lubrication			BU	60			
=QgCv -X100	6/2	U	124	BN				BN	124	U	6/0	=BmMep -M1
=QgCv -X100	6/2	V	126	BK				BK	126	V	6/0	=BmMep -M1
=QgCv -X100	6/2	W	128	BU	-W2 E001983	4,5 mt		BU	128	W	6/1	=BmMep -M1
=QgCv -XQGPE	6/1	5	PE	GNYE	Blade motor supply cable			GNYE	PE	PE	6/1	=BmMep -M1
=QgCv -X100	6/2	PE	PE	Sch				Sch	PE			
=QgMep -XS7	23/6	PE	PE	GN-RD				GN-RD	PE			
=QgMep -XS7	23/7	3	051	WH-BK				WH-BK	051	M27	23/7	0V
=QgMep -XS7	23/7	2	027	YEPK	-W20 E001905			YEPK	027	M27	23/7	AI4a
=QgMep -XS7	23/6	PE	PE	Sch	Strain gauge sensor cable			Sch	PE			
=QgCv -XQG2	15/7	052_2	052	BN-BU				BN-BU	052	1	23/7	=QgMep -XS7

REV.	MODIFICA	DATA	FIRME
R.0.3	BOM review	06/11/2018	Solfanelli
R0.2.	Added RSE2 safety module	24/10/2018	Solfanelli
R0.1	Con Cablaggio per inverter MITSUBISHI FR-D700	03/09/2018	Solfanelli

Dis. N. H320A/240ULCSA/5118
CAD SPAC
File H320A\1.dwg
Data 19/12/2018

Impianto/Plant: Schematic H-320A_240/60Hz PLC HW 1
Denominazione/Title: RIASSUNTIVO CAVI
Cable Summary

Ordine/Requisition
Commessa/Order: H-320A
Esecutore/Executor: Solfanelli

Foglio/Page 33
Segue/Follow 34
Ultimo/Last 217

CAVI ESTERNI \ EXTERNAL CABLES

QUADRO \ BOARD									DESTINAZIONE \ LOCATION			
QUADRO BOARD	FOGLIO SHEET	NR. MORSETTO TERMINAL NO.	NR. FILO CONDUCTOR NO.	ID SUL CAVO ID IN CABLE	CAVO CABLE	LUNGHEZZA LENGHT [mt]	DISTURBO NOISE LEVEL	ID SUL CAVO ID IN CABLE	NR. FILO CONDUCTOR NO.	NR. MORSETTO TERMINAL NO.	FOGLIO SHEET	QUADRO BOARD
=QgMep -XR0	22/2	4	sh	GN-RD				GN-RD	sh	M11	22/3	Shield
=QgMep -XR0	22/2	3	025	WH-BK				WH-BK	025	M11	22/1	+VRf
=QgMep -XR0	22/2	2	024	YEPK	-W21 E001905			YEPK	024	M11	22/2	AI0
=QgMep -XR0	22/2	4	sh	Sch	Head potentiometer device cable			Sch	sh	M11	22/3	Shield
=QgMep -XR0	22/2	1	023	BN-BU				BN-BU	023	M11	22/2	0V
=BmMep -S0	18/1	1	052	BN				BN	052			
=QgCv -XQG4	18/1	031	100	BK	-W27 022.0422			BK	100	4	18/1	=BmMep -S0
=BmMep -S0	18/2	3	051	BU	Blade Proximity sensor cable			BU	051			
				WH				WH				
=SaCv	24/1		314	GN-RD				GN-RD	314	M6	24/1	B+
=SaCv	24/1		312	WH-BK				WH-BK	312	M6	24/2	A-
=SaCv	24/1		313	YEPK	-W28 E001905			YEPK	313	M6	24/1	B-
SCH	24/0	M6	SCR	Sch	Stepper motor head control cable			Sch	SCR			
=SaCv	24/2		311	BN-BU				BN-BU	311	M6	24/3	A+
=QgCv -U10	9/2	A1	221	BN				BN	221	YELLOW	9/2	=BmMep -M8
=QgCv -U10	9/2	A1	222	BK				BK	222	WHITE	9/2	=BmMep -M8
=QgCv -U10	9/2	B1	223	GY	-W29 E001979			GY	223	BLUE	9/4	=BmMep -M8
=QgCv -U10	9/2	B2	224	BU	Stepper X axis motor cable			BU	224	BROWN	9/4	=BmMep -M8
=QgCv -XQGPE	9/2	5	PE	GNYE				GNYE	PE		9/3	=BmMep -M8
				GN-RD				GN-RD				
=QgCv	16/1	20	0320	WH-BK				WH-BK	0320	M8	24/5	SCH
=QgCv	16/1	15	0315	YEPK	-W29/1 E001905			YEPK	0315	M8	24/6	DR+
SCH	24/5	M8	???	Sch	Step/dir X axis control cable			Sch	???			
=QgCv	16/1	14	0314	BN-BU				BN-BU	0314	M8	24/8	ST+
				GN-RD				GN-RD				
=QgCv -JB	16/5	011	011	WH-BK				WH-BK	011	11	16/1	=QgCv
=QgCv -JB	16/5	012	012	YEPK	-W29/2 E001905	2,5 mt		YEPK	012	12	16/1	=QgCv
=QgCv -JB	16/5	PE	13	Sch	Stepper signals interface cable			Sch	13			
=QgCv -JB	16/5	010	010	BN-BU				BN-BU	010	10	16/1	=QgCv

REV.	MODIFICA	DATA	FIRME
R.0.3	BOM review	06/11/2018	Solfanelli
R0.2.	Added RSE2 safety module	24/10/2018	Solfanelli
R0.1	Con Cablaggio per inverter MITSUBISHI FR-D700	03/09/2018	Solfanelli

Dis. N. H320A/240ULCSA/5118
CAD SPAC
File H320A\1.dwg
Data 19/12/2018

Impianto/Plant: Schematic H–320A_240/60Hz PLC HW 1

Denominazione/Title: RIASSUNTIVO CAVI
Cable Summary

Ordine/Requisition
Commessa/Order H–320A
Esecutore/Executor Solfanelli

Foglio/Page 34
Segue/Follow 35
Ultimo/Last 217

CAVI ESTERNI \ EXTERNAL CABLES

QUADRO \ BOARD									DESTINAZIONE \ LOCATION			
QUADRO BOARD	FOGLIO SHEET	NR. MORSETTO TERMINAL NO.	NR. FILO CONDUCTOR NO.	ID SUL CAVO ID IN CABLE	CAVO CABLE	LUNGHEZZA LENGHT [mt]	DISTURBO NOISE LEVEL	ID SUL CAVO ID IN CABLE	NR. FILO CONDUCTOR NO.	NR. MORSETTO TERMINAL NO.	FOGLIO SHEET	QUADRO BOARD
=QgCv -Q-K6R	20/4	95	1055	BN	-W30 E001980			BN	1055	4	20/4	=QgMep -S23
24VDC	20/4	M2	261	BU	Chip conveyor reverse p.button cable			BU	261	3	20/4	=QgMep -S23
=QgCv -XQG2	15/7	052_2 ○	052	BN	-W32 022.0355			BN	052	1	23/4	=BmMep -B1
AI3a	23/4	M26	028	BK	Blade deviation device cable			BK	028	4	23/4	=BmMep -B1
0V	23/4	M26	051	BU				BU	051	3	23/4	=BmMep -B1
=QgCv -Q-K4	6/7	T1	015	BN	-W4 E001984			BN	015	U	6/7	=BmMep -M2
=QgCv -Q-K4	6/7	T2	016	BK	Coolant motor pump cable			BK	016	V	6/7	=BmMep -M2
=QgCv -Q-K4	6/7	T3	017	BU				BU	017	W	6/7	=BmMep -M2
=QgCv -XQGPE	6/8	5 ○	PE	GNYE				GNYE	PE	PE	6/7	=BmMep -M2
=QgCv -XQG3	11/1	262 ○	261	WH	-W56 022.2056	6,0 mt		WH	261	1	13/0	=BmMep -FS1
=QgCv -XQG3	11/1	262 ○	261	BN	Safety L.SW. Lateral guard			BN	261	2	13/0	=BmMep -FS1
=QgCv -XQG2	10/0	60 ○	60	GN				GN	60	3	13/0	=BmMep -FS1
=BmMep -FS1	13/0	4	1610	YE				YE	1610			
=BmMep -FS1	13/1	5	23	GY				GY	23			
=QgCv -XQG3	11/1	262 ○	261	PK				PK	261	6	13/1	=BmMep -FS1
=BmMep -FS1	13/1	7	1611	BU				BU	1611			
	14/3		275	RD				RD	275	8	13/1	=BmMep -FS1
=QgCv -XQG3	11/1	262 ○	261	WH	-W57 022.2053	5.0 mt		WH	261	1	13/2	=BmMep -FS2
=QgCv -XQG3	11/1	262 ○	261	BN	Safety L.SW. Right frontal guard			BN	261	2	13/2	=BmMep -FS2
=QgCv -XQG2	10/0	60 ○	60	GN				GN	60	3	13/2	=BmMep -FS2
=BmMep -FS2	13/2	4	1620	YE				YE	1620			
=BmMep -FS2	13/2	5	24	GY				GY	24			
=QgCv -XQG3	11/1	262 ○	261	PK				PK	261	6	13/2	=BmMep -FS2
=BmMep -FS2	13/3		1621	BU				BU	1621			
=QgCv -XQG2	13/3	275_1 ○	275	RD				RD	275	8	13/3	=BmMep -FS2

REV.	MODIFICA	DATA	FIRME
R.0.3	BOM review	06/11/2018	Solfanelli
R0.2.	Added RSE2 safety module	24/10/2018	Solfanelli
R0.1	Con Cablaggio per inverter MITSUBISHI FR-D700	03/09/2018	Solfanelli

Dis. N H320A/240ULCSA/5118
CAD SPAC
File H320A\1.dwg
Data 19/12/2018

Impianto/Plant: Schematic H-320A_240/60Hz PLC HW 1
Denominazione/Title: RIASSUNTIVO CAVI
Cable Summary

Ordine/Requisition
Commessa/Order: H-320A
Esecutore/Executor: Solfanelli

MEP

Foglio/Page 35
Segue/Follow 36
Ultimo/Last 217

CAVI ESTERNI \ EXTERNAL CABLES

QUADRO \ BOARD									DESTINAZIONE \ LOCATION			
QUADRO BOARD	FOGLIO SHEET	NR. MORSETTO TERMINAL NO.	NR. FILO CONDUCTOR NO.	ID SUL CAVO ID IN CABLE	CAVO CABLE	LUNGHEZZA LENGHT [mt]	DISTURBO NOISE LEVEL	ID SUL CAVO ID IN CABLE	NR. FILO CONDUCTOR NO.	NR. MORSETTO TERMINAL NO.	FOGLIO SHEET	QUADRO BOARD
=QgCv -XQG3	11/1	262 ○	261	WH				WH	261	1	13/4	=BmMep -FS3
=QgCv -XQG3	11/1	262 ○	261	BN				BN	261	2	13/4	=BmMep -FS3
=QgCv -XQG2	10/0	60 ○	60	GN				GN	60	3	13/4	=BmMep -FS3
=BmMep -FS3	13/4	4	1630	YE	-W58 022.2053	5.0 mt		YE	1630			
=BmMep -FS3	13/4	5	25	GY	Safety L.SW. Left frontal guard			GY	25			
=QgCv -XQG3	11/1	262 ○	261	PK				PK	261	6	13/4	=BmMep -FS3
=BmMep -FS3	13/4		1631	BU				BU	1631			
=QgCv -XQG2	13/5	275_2 ○	275	RD				RD	275	8	13/4	=BmMep -FS3
=QgCv -XQG4	19/3	0391 ○	110	BK				BK	110	4	19/3	=BmMep -S10
=QgCv -XQG4	19/3	052 ○	052	BU	-W59 022.0398			BU	052	3	19/3	=BmMep -S10
				BN	L.SW. Bar infeed shuttle vise cable			BN				
				WH				WH				
=QgCv -XQG4	21/4	044/0 ○	54	BN	-W65 E001980			BN	54	1	21/4	=QgCv -X40
=QgCv -XQG2	21/3	261 ○	60	BU	S.V. Unlock Head feed down			BU	60	2	21/4	=QgCv -X40
=QgCv -XFET	7/0	1 ⊂	1021	BN				BN	1021	T1	7/0	=QgCv -Q-K6
=QgCv -XFET	7/0	2 ⊂	1022	BK	-W7 E001984			BK	1022	T2	7/0	=QgCv -Q-K6
=QgCv -XFET	7/1	3 ⊂	1023	BU	Chip conveyor motor cable			BU	1023	T3	7/1	=QgCv -Q-K6
=QgCv -XFET	7/1	PE ⊂	PE	GNYE				GNYE	PE	○ 5	7/1	=QgCv -XQGPE
=QgEtMep XMET	7/0	1 ⊂	1024	BN				BN	1024	U	7/0	=QgEtMep -M5
=QgEtMep XMET	7/0	2 ⊂	1025	BK	-W7/1 E001984			BK	1025	V	7/0	=QgEtMep -M5
=QgEtMep XMET	7/1	3 ⊂	1026	BU	Chip conveyor motor2 cable			BU	1026	W	7/1	=QgEtMep -M5
=QgEtMep XMET	7/1	PE ⊂	7	GNYE				GNYE	7	PE	7/1	=QgEtMep -M5
=BmMep -XEV1	18/6	1 ⊂	052	RD				RD	052			
=QgCv -XQG4	18/5	0393 ○	868	BK	-W7/B E001981			BK	868	⊂— 2	18/5	=BmMep -XEV1
=BmMep -XEV1	18/6	3 ⊂	051	WH	Chip conveyor Proximity sensor			WH	051			
				Sch				Sch				

REV.	MODIFICA	DATA	FIRME
R.0.3	BOM review	06/11/2018	Solfanelli
R0.2.	Added RSE2 safety module	24/10/2018	Solfanelli
R0.1	Con Cablaggio per inverter MITSUBISHI FR-D700	03/09/2018	Solfanelli

Dis. N. H320A/240ULCSA/5118
CAD SPAC
File H320A\1.dwg
Data 19/12/2018

Impianto/Plant: Schematic H-320A_240/60Hz PLC HW 1
Denominazione/Title: RIASSUNTIVO CAVI
Cable Summary

Ordine/Requisition
Commessa/Order: H-320A
Esecutore/Executor: Solfanelli

Foglio/Page 36
Segue/Follow 37
Ultimo/Last 217

CAVI ESTERNI \ EXTERNAL CABLES

QUADRO \ BOARD									DESTINAZIONE \ LOCATION			
QUADRO BOARD	FOGLIO SHEET	NR. MORSETTO TERMINAL NO.	NR. FILO CONDUCTOR NO.	ID SUL CAVO ID IN CABLE	CAVO CABLE	LUNGHEZZA LENGHT [mt]	DISTURBO NOISE LEVEL	ID SUL CAVO ID IN CABLE	NR. FILO CONDUCTOR NO.	NR. MORSETTO TERMINAL NO.	FOGLIO SHEET	QUADRO BOARD
=BmMep -XEV	18/6	1	052	BN				BN	052	1	18/5	=BmMep -S52
=BmMep -XEV	18/5	2	867	BK	-W7/B1 022.0424			BK	867	4	18/5	=BmMep -S52
=BmMep -XEV	18/6	3	051	BU	Chip conveyor Proximity sensor2			BU	051	3	18/5	=BmMep -S52
				WH				WH				
=QgCv -XQG4	21/1	042	009	BN	-W90 E001980			BN	009	1	21/1	=QgCv -X009
=QgCv -XQG2	10/3	60	60	BU	S.V. Cut Vise Closing			BU	60	2	21/1	=QgCv -X009
=QgCv -XQG4	21/3	047	011	BN	-W91 E001980			BN	011	1	21/3	=QgCv -X011
=QgCv -XQG2	21/3	261	60	BU	S.V. Shuttle Vise Closing			BU	60	2	21/4	=QgCv -X011
=QgCv -XQG4	21/0	041	008	BN	-W92 E001980			BN	008	1	21/0	=QgCv -X008
=QgCv -XQG2	10/3	60	60	BU	S.V. Cut Vise Opening			BU	60	2	21/0	=QgCv -X008
=QgCv -XQG4	21/0	0410	0410	BN	-W92/1 E001980			BN	0410	1	21/0	=QgCv -X41
=QgCv -XQG2	10/3	60	60	BU	S.V. Cut Vise Opening			BU	60	2	21/-1	=QgCv -X41
=QgCv -XQG4	21/3	046	010	BN	-W93 E001980			BN	010	1	21/3	=QgCv -X010
=QgCv -XQG2	21/3	261	60	BU	S.V. Shuttle Vise Opening			BU	60	2	21/2	=QgCv -X010
=QgCv -XQG4	21/2	0460	0460	BN	-W93/1 E001980			BN	0460	1	21/2	=QgCv -X42
=QgCv -XQG2	10/3	60	60	BU	S.V. Shuttle Vise Opening			BU	60	2	21/2	=QgCv -X42
=QgCv -F19	21/8		1352	BN	-W95 E001980			BN	1352	+	21/8	=BmMep -H2
=QgCv -XQG2	21/7	261	60	BU	Light Cut zone device cable			BU	60	--	21/8	=BmMep -H2
=QgCv -XTL	21/7	3	1351	BN	-W96 E001980			BN	1351		21/7	=QgCv -F18
=QgCv -XTL	21/7	1	60	BU	Lser light device cable			BU	60	261	21/7	=QgCv -XQG2

REV.	MODIFICA	DATA	FIRME
R.0.3	BOM review	06/11/2018	Solfanelli
R0.2.	Added RSE2 safety module	24/10/2018	Solfanelli
R0.1	Con Cablaggio per inverter MITSUBISHI FR-D700	03/09/2018	Solfanelli

Dis. N H320A/240ULCSA/5118
CAD SPAC
File H320A\1.dwg
Data 19/12/2018

Impianto/Plant: Schematic H-320A_240/60Hz PLC HW 1
Denominazione/Title: RIASSUNTIVO CAVI
Cable Summary

Ordine/Requisition
Commessa/Order: H-320A
Esecutore/Executor: Solfanelli

MEP

Foglio/Page 37
Segue/Follow 38
Ultimo/Last 217

CAVI ESTERNI \ EXTERNAL CABLES

QUADRO \ BOARD									DESTINAZIONE \ LOCATION			
QUADRO BOARD	FOGLIO SHEET	NR. MORSETTO TERMINAL NO.	NR. FILO CONDUCTOR NO.	ID SUL CAVO ID IN CABLE	CAVO CABLE	LUNGHEZZA LENGHT [mt]	DISTURBO NOISE LEVEL	ID SUL CAVO ID IN CABLE	NR. FILO CONDUCTOR NO.	NR. MORSETTO TERMINAL NO.	FOGLIO SHEET	QUADRO BOARD
			0360	BN				BN	0360			
=QgCv -JB	11/8	ES1 ○	470	BK				BK	470	CS ME-03VU24	11/5	=QgCv -RSE1
=QgCv -JB	12/1	470 ○	360	BU				BU	360	○ 560	12/1	=QgCv -XQG4
=QgCv -JB	11/8	ES2 ○	451	GN				GN	451	CS ME-03VU24	11/5	=QgCv -RSE1
=QgCv -JB	12/1	451 ○	450	RD	-WEPC E001905.	3,0 mt		RD	450			
=QgCv -JB	12/1	450 ○	471	YE	Power conveyor interface cable			YE	471	○ 460	12/1	=QgCv -XQG4
=QgCv -JB	21/4	047 ○	471	WH				WH	471	○ 047	21/3	=QgCv -XQG4
=QgCv -JB	12/1	471 ○	60	PK				PK	60	○ 561	12/1	=QgCv -XQG4
=QgCv -JB	21/9	60 ○		Sch				Sch		○ 261	21/7	=QgCv -XQG2
			061	BN				BN	061			
=QgCv -F15	8/5		60	BU	-WPLC E001980			BU	60	M7	26/0	24VCC
=QgCv -XQG2	10/0	60 ○			PLC power supply cable					M7	26/0	0VCC
			261	WH				WH	261			
=QgCv -XQG3	11/1	262 ○	261	BN				BN	261	1	13/6	=BmMep -FS5
=QgCv -XQG3	11/1	262 ○	60	GN				GN	60	2	13/6	=BmMep -FS5
=QgCv -XQG2	10/0	60 ○	1650	YE				YE	1650	3	13/6	=BmMep -FS5
=BmMep -FS5	13/6	4	26	GY	-W58/2 022.2056	7,0 mt		GY	26			
=BmMep -FS5	13/6	5	261	PK	Safety L.SW Tunnel frontal guard			PK	261			
=QgCv -XQG3	11/1	262 ○	1651	BU				BU	1651	6	13/6	=BmMep -FS5
=BmMep -FS5	13/7		275	RD				RD	275			
=QgCv -XQG2	13/7	275_3 ○								8	13/7	=BmMep -FS5
			001	BN				BN	001			
=QgCv -XQG4	20/3	053 ○	60	BU	-W37 E001980	4,0 mt		BU	60	x1	20/3	=BmMep -H3
=QgCv -XQG2	10/3	60 ○			Flashing lamp cable					x2	20/3	=BmMep -H3

REV.	MODIFICA	DATA	FIRME
R.0.3	BOM review	06/11/2018	Solfanelli
R0.2.	Added RSE2 safety module	24/10/2018	Solfanelli
R0.1	Con Cablaggio per inverter MITSUBISHI FR-D700	03/09/2018	Solfanelli

Dis. N. H320A/240ULCSA/5118
CAD SPAC
File H320A\1.dwg
Data 19/12/2018

Impianto/Plant: Schematic H-320A_240/60Hz PLC HW 1
Denominazione/Title: RIASSUNTIVO CAVI
Cable Summary

Ordine/Requisition
Commessa/Order: H-320A
Esecutore/Executor: Solfanelli

Foglio/Page 38
Segue/Follow 39
Ultimo/Last 217

0	1	2	3	4	5	6	7	8	9
Nome/Item	MEP CODE	Descrizione/Description			Descrizione EN		Codice Interno	Fg/Sh	Q.ta/Q.ty
-FAL		Fus. tripolare sezionabile non sotto carico						5	1
-FAL1	E002239	Portafusibile 3 x (10.3 x 38) 690V 32 A			Fuse holding terminal 3 x (10.3 x 38) 690V 32 A		E002239	5	1
	E004678	Fusibile ritardato 10.3 x 38 - 25 A UL/CSA			Fuse time delay 10.3 x 38 - 25A UL/CSA		054.4678		3
-S4	E000911	Portacontatti per pulsantiera			Carrier for push button		E000911	27	1
	E000937	Blocchetto NA			Normally open contact		E000937		1
	E001245	Fungo Emergenza			Emergency push button		E001245		1
	E000936	contatto pulsantiera NC			Normally open contact		E000936	12	3
	E000911	Portacontatti per pulsantiera			Carrier for push button		E000911		1
	E001245	Fungo Emergenza			Emergency push button		E001245		1
-B1	E000015	Sensore induttivo 0-16mA/ 1-2.5mm, con connettore M8			Inductive sensor 0-16mA/ 1-2.5mm, with M8 connector.		E000015	23	1
-CR0	022.2601	Guaina POLIFLEX Ø16			Poliflex Covering Ø16		NW 12-1200127	30	1
-CR1	022.2602	Guaina POLIFLEX Ø18			Poliflex Covering Ø18		NW 14-1200143	30	1
-CR2	022.0197	Guaina POLIFLEX Ø35			Poliflex Covering Ø35		NW 29-3800296	30	1
-CR4	022.2601	Guaina POLIFLEX Ø16			Poliflex Covering Ø16		NW 12-1200127	30	1
-CR5	022.2601	Guaina POLIFLEX Ø16			Poliflex Covering Ø16		NW 12-1200127	30	1
-FS1	022.4008	Sensore di sicurezza magnetico con RFID			D ST DD420MK-D1T		ST DD420MK-D1TPIZZATO	13	1
	019.5353	Fascetta in plastica 140x3,5			Plastic clamp 140x3,5		32031 Legrand	29	1
-FS2	022.4008	Sensore di sicurezza magnetico con RFID			D ST DD420MK-D1T		ST DD420MK-D1TPIZZATO	13	1
-FS3	022.4008	Sensore di sicurezza magnetico con RFID			D ST DD420MK-D1T		ST DD420MK-D1TPIZZATO	13	1
-FS5	022.4008	Sensore di sicurezza magnetico con RFID			D ST DD420MK-D1T		ST DD420MK-D1TPIZZATO	13	1
-H2	E000010	Lampada zona di taglio 24Vdc			Led lamp for work zone 24Vdc		E000010	21	1
-H3	E000012	Lampeggiante + sirena 24Vac/dc for H11A			Flashing plus siren 24Vac/dc for H11A		E000012	20	1
-K27	E001002	Elettrovalvola 4/3 centri chiusi CETOP3 24Vdc			Hydraulic solenoid valve 4/3 close center CETOP3 24Vdc		E001002	21	1
-K29	E001002	Elettrovalvola 4/3 centri chiusi CETOP3 24Vdc			Hydraulic solenoid valve 4/3 close center CETOP3 24Vdc		E001002	21	1
-K31	E001002	Elettrovalvola 4/3 centri chiusi CETOP3 24Vdc			Hydraulic solenoid valve 4/3 close center CETOP3 24Vdc		E001002	21	1
-K41	V.d.Id.	Vedi distinta idraulica			See hydraulic BOM		V.d.Id.	21	1
-K42	V.d.Id.	Vedi distinta idraulica			See hydraulic BOM		V.d.Id.	21	1
-M1	P00002-480	Motore 4,0KW, 277/480V, 12/6,97A			Motor 4,0KW, 277/480V, 12/6,97A		P00002-480	6	1
-M2	P00003-480	Elettropompa acqua 250W, V=2800rpm, 480V 60Hz			Electropump 250W, V=2800rpm, 480V 60Hz		P00003-480	6	1
-M20	P000004-480	Motore centralina idraulica 1.3KW, 240V/480V.60Hz, 5.0/2.5A			Motor oil unit 1.3KW, 240V/480V.60Hz, 5.0/2.5A		P000004-480	6	1
-M8	P000001	Motore stepper 21Nm 13A, 1.8°, FL110STH150-1304A-H-1			Stepper Motor 21Nm 13A, 1.8°, FL110STH150-1304A-H-1		019.3408	9	1
-M9	P000007	Motore stepper 1.9Nm, 2.8A, 1.8°			Stepper motor 1.9Nm, 2.8A, 1.8°		019.3555	24	1
-PC1	022.0227	Pressacavo M20			Cable Gland M20		M20	30	4
-PC2	022.0232	Pressacavo metallico			Metal Cable Gland		1/4"G	30	1
-R5	E000003	Potenziometro lineare corsa 500mm			Linear potentiometer sensor 500mm.		E000003	22	1
-RD1	022.0349	Riduzione			Joint Reduction		M/F M20/PG13,5	30	1
-RE1	022.0211	Raccordo rapido dritto			Rapid straight joint SEM PG13,5/Ø19		SEM PG13,5/Ø19	30	1
-RE2	022.0209	Raccordo rapido dritto PG29/Ø35			Rapid straight Joint PG29/Ø35		SEM PG29/Ø35	30	1
-RE20	022.0209	Raccordo rapido dritto PG29/Ø35			Rapid straight Joint PG29/Ø35		SEM PG29/Ø35	30	1
-S0	E000013	Sensore di prossimità PNP (lungo) con connettore M12			Proximity sensor PNP (long) with M12 connector.		E000013	18	1
-S10	E000004	Finecorsa a rotella, contatti 1N0 + 1NC e connettore M12			Limit switch with roll 1NO+1NC and M12 connector.		E000004	19	1
-S47	E000004	Finecorsa a rotella, contatti 1N0 + 1NC e connettore M12			Limit switch with roll 1NO+1NC and M12 connector.		E000004	19	1
-S52	E000013	Sensore di prossimità PNP (lungo) con connettore M12			Proximity sensor PNP (long) with M12 connector.		E000013	18	1
-TAL		Trasformatore di potenza trifase stella-stella						5	1
-V1	E000011	Traguardatore laser a barra in Vdc			Laser Line sign sensor Vdc.		E000011	21	1

REV.	MODIFICA	DATA	FIRME
R.0.3	BOM review	06/11/2018	Solfanelli
R0.2.	Added RSE2 safety module	24/10/2018	Solfanelli
R0.1	Con Cablaggio per inverter MITSUBISHI FR-D700	03/09/2018	Solfanelli

Dis. N. H320A/240ULCSA/5118
CAD SPAC
File H320A\1.dwg
Data 19/12/2018

Impianto/Plant: Schematic H-320A_240/60Hz PLC HW 1

Denominazione/Title: DISTINTA MATERIALI
Material List

Ordine/Requisition
Commessa/Order: H-320A
Esecutore/Executor: Solfanelli

Foglio/Page 39
Segue/Follow 40
Ultimo/Last 217

Nome/Item	MEP CODE	Descrizione/Description	Descrizione EN	Codice Interno	Fg/Sh	Q.ta/Q.ty
-XEV	022.0281 + 022.0268	Connettore fisso ILME (CK03I + CKF04) 5 poli per evacuatore trucioli	Fixed connector ILME (CK03I + CKF04) 5 poles	CK03I + CKF04		1
-XEV1	022.0282 + 022.0267	Connettore volante ILME (CK03VS pioli + CKM04) 5 poli per evacuatore trucioli	Mobile connector ILME (CK03VS + CKM04) 5 poles	CK03VS pioli + CKM04		1
	E001230	Azionamento per motori (60 VAC.10A) con modbus	Driver for step motor (60 VAC.10A) + modbus	022.1330	16	1
-AL	022.2231	Morsetto 4(6)mmq per 2 fili a molla - PHOENIX	Terminal 4(6)mmq for 2 wires - PHOENIX	ST4- 3031364		8
	2.5 mm	Morsetto da 2.5 mm non abbinato a costruttore				1
-CC1	022.0304	Terminale a occhiello (Rosso)	Wire Terminal Connection Red	Ø5 da 1,5mmq A5/P-B15/P	29	1
-CC2	022.0307	Terminale a faston (Rosso)	Wire Terminal Connection Red	2.8x0.5 da 1,5mmq A00T/P	29	1
-CP1	031.2080	Consolle di programmazione MEP50 H14A	Programming consolled MEP50 H14A		30	1
	016.0765	Quadro pannello comandi per H14A	Command panel board for H14A	016.0765		1
-CR10	022.0197	Guaina POLIFLEX Ø35	Poliflex Covering Ø35	NW 29-3800296	30	1
-CR11	022.0197	Guaina POLIFLEX Ø35	Poliflex Covering Ø35	NW 29-3800296	30	1
-CU1	E004091	Cavo USB per quadro comandi con connettore	Cable USB for command panel with connector	E004091	17	1
	022.2834	Controllore Mep50C__V1.0__senza display	Controller Mep50C__V1.0__without display			1
	031.2081	Consolle di programmazione MEP50 H11A, H230A,H14A.1	Programming consolled MEP50 H11A, H230A,H14A.1			1
-F1 -F2	E002240	Portafusibile 2 x (10.3 x 38) 690V 50A	Fuse holding terminal 2 x (10.3 x 38) 690V 50A	E002240	8	1
	E004538	Fusibile ritardato 10.3 x 38 - 5A UL/CSA	Fuse time delay 10.3 x 38 - 5A UL/CSA	054.4538		2
-F13	E000139	Morsetto portafusibile 1 x (10.3 x 38) 690V 32A	Fuse holding terminal 1 x (10.3 x 38) 690V 32 A	E000139	8	1
	E004675	Fusibile ritardato 10.3 x 38 - 2 A UL/CSA	Fuse time delay 10.3 x 38 - 2 UL/CSA	E004675		1
-F14	E004664	Fusibile ritardato 10.3 x 38 - 7.5 UL/CSA	Fuse time delay 10.3 x 38 - 7.5 UL/CSA	054.4664	8	1
	E000139	Morsetto portafusibile 1 x (10.3 x 38) 690V 32A	Fuse holding terminal 1 x (10.3 x 38) 690V 32 A	E000139		1
-F15	E000139	Morsetto portafusibile 1 x (10.3 x 38) 690V 32A	Fuse holding terminal 1 x (10.3 x 38) 690V 32 A	E000139	8	1
	E004662	Fusibile ritardato 10.3 x 38 - 4 A UL/CSA	Fuse time delay 10.3 x 38 - 4 A UL/CSA	054.4662		1
-F16	E000139	Morsetto portafusibile 1 x (10.3 x 38) 690V 32A	Fuse holding terminal 1 x (10.3 x 38) 690V 32 A	E000139	8	1
	054.4585	Fusibile Ritardato 10.3x38 - 6A UL/CSA	Fuse Time delay 10.3x38 - 6A UL/CSA	6A 600V ATDR6		1
-F17	E000139	Morsetto portafusibile 1 x (10.3 x 38) 690V 32A	Fuse holding terminal 1 x (10.3 x 38) 690V 32 A	E000139	8	1
	E004673	Fusibile ritardato 10.3 x 38 - 1A UL/CSA	Fuse time delay 10.3 x 38 - 1A UL/CSA	054.4673		1
-F18	E000139	Morsetto portafusibile 1 x (10.3 x 38) 690V 32A	Fuse holding terminal 1 x (10.3 x 38) 690V 32 A	E000139	21	1
	E004659	Fusibile ritardato 10.3 x 38 - 0.5 A UL/CSA	Fuse time delay 10.3 x 38 - 0.5 A UL/CSA	054.4659		1
-F19	E000139	Morsetto portafusibile 1 x (10.3 x 38) 690V 32A	Fuse holding terminal 1 x (10.3 x 38) 690V 32 A	E000139	21	1
	E004673	Fusibile ritardato 10.3 x 38 - 1A UL/CSA	Fuse time delay 10.3 x 38 - 1A UL/CSA	054.4673		1
-F22 -F21 -F20	E002239	Portafusibile 3 x (10.3 x 38) 690V 32A	Fuse holding terminal 3 x (10.3 x 38) 690V 32 A	E002239	6	1
	E004678	Fusibile ritardato 10.3 x 38 - 25 A UL/CSA	Fuse time delay 10.3 x 38 - 25A UL/CSA	054.4678		3
-F3 -F4	E004676	Fusibile ritardato 10.3 x 38 - 3.5 UL/CSA	Fuse time delay 10.3 x 38 - 3.5 UL/CSA	054.467	8	2
	E002240	Portafusibile 2 x (10.3 x 38) 690V 50A	Fuse holding terminal 2 x (10.3 x 38) 690V 50A	E002240		1
-F5 -F6 -F7	E002239	Morsetto portafusibile 3 x (10.3 x 38) 690V 32 A	Fuse holding terminal 3 x (10.3 x 38) 690V 32 A	E002239	6	1
	E004675	Fusibile ritardato 10.3 x 38 - 2 A UL/CSA	Fuse time delay 10.3 x 38 - 2 UL/CSA	E004675		3
-F8 -F9 -F10	E002239	Morsetto portafusibile 3 x (10.3 x 38) 690V 32 A	Fuse holding terminal 3 x (10.3 x 38) 690V 32 A	E002239	6	1
	E004662	Fusibile ritardato 10.3 x 38 - 4 A UL/CSA	Fuse time delay 10.3 x 38 - 4 A UL/CSA	054.4662		3
-FL1	022.0133	Filo unipolare AWG20 CSA (0.5mmq)	Single wire AWG20 CSA (0.5mmq)		29	1
-FL2	022.0134	Filo unipolare AWG16 CSA (1.5mmq)	Single wire AWG16 CSA (1.5mmq)		29	1
	022.1996	Cavo 1AWG12 GN/YE	Cable 1AWG12 GN/YE			1
-FL3	022.1995	Cavo 1AWG12 NERO	Cable 1AWG12 NERO		29	1
-G1	E000016	Interruttore alimentazione Vi 240-400-500 VAC Vu 24Vcc 14A	Switching power supply Vi 240-400-500 VAC Vu 24Vcc 14A	022.0908	8	1
-GH10	022.0247	Dado poliammide PG29	Nut Poliammide PG29	PG29	30	1
-GH11	022.0247	Dado poliammide PG29	Nut Poliammide PG29	PG29	30	1

REV.	MODIFICA	DATA	FIRME
R.0.3	BOM review	06/11/2018	Solfanelli
R0.2.	Added RSE2 safety module	24/10/2018	Solfanelli
R0.1	Con Cablaggio per inverter MITSUBISHI FR-D700	03/09/2018	Solfanelli

Dis. N. H320A/240ULCSA/5118
CAD SPAC
File H320A\1.dwg
Data 19/12/2018

Impianto/Plant: Schematic H-320A_240/60Hz PLC HW 1
Denominazione/Title: DISTINTA MATERIALI / Material List

Ordine/Requisition
Commessa/Order: H-320A
Esecutore/Executor: Solfanelli

Foglio/Page: 40
Segue/Follow: 41
Ultimo/Last: 217

0	1	2	3	4	5	6	7	8	9
Nome/Item	MEP CODE	Descrizione/Description			Descrizione EN		Codice Interno	Fg/Sh	Q.ta/Q.ty
-JB	022.2243	Morsetto 2,5(4)mmq per 2 fili a molla - PHOENIX			Terminal 2,5(4)mmq for 2 wires - PHOENIX		ST2,5- 3031212		4
	022.2256	Morsetto da 2.5 mm singolo per 2 fili a molla			Single pole spring terminal 2,5mmq		56.703.0055.0		8
-K4	E003012	Contattore 3 KW NC (24 V Dc)			Contactor 3 KW NO (24 V Dc)		E003012	20	1
-K6	E003011	Contattore 3 KW NC (24 V Dc)			Contactor 3 KW NC (24 V Dc)		E003011	20	1
-K65	E003012	Contattore 3 KW NC (24 V Dc)			Contactor 3 KW NO (24 V Dc)		E003012	20	1
-K6R	E003011	Contattore 3 KW NC (24 V Dc)			Contactor 3 KW NC (24 V Dc)		E003011	20	1
	E003924	Kit ponti potenza per teleinvertitore			Kit for contactor reversing		E003924		1
-KS10	E003011	Contattore 3 KW NC (24 V Dc)			Contactor 3 KW NC (24 V Dc)		E003011	11	1
-KS11	E003011	Contattore 3 KW NC (24 V Dc)			Contactor 3 KW NC (24 V Dc)		E003011	11	1
-KS12	E003011	Contattore 3 KW NC (24 V Dc)			Contactor 3 KW NC (24 V Dc)		E003011	11	1
-M6	019.5220	Ventola raffreddamento 120x120 24Vdc			Fan cooling 120x120 24Vdc		V108MBW24DC AlfaPlastic	10	1
	019.5117	Griglia per ventola 120x120			Cover for fan cooler 120x120		ALFA GM120		1
	E005220	Copri ventola di raffreddamento 120 x 120			Cover for fan cooler 120 x 120		E005220		1
-M7	019.5220	Ventola raffreddamento 120x120 24Vdc			Fan cooling 120x120 24Vdc		V108MBW24DC AlfaPlastic	10	1
	019.5117	Griglia per ventola 120x120			Cover for fan cooler 120x120		ALFA GM120		1
	E005220	Copri ventola di raffreddamento 120 x 120			Cover for fan cooler 120 x 120		E005220		1
-NM1	022.0290	Etichetta segnafilo			Cable maker and wire			29	1
-NM2	022.0290	Etichetta segnafilo			Cable maker and wire			29	1
-PT1	022.0311	Terminale a puntale da (Bianco)			Wire Terminal Connection White		0,5mmq DZ5CE005	29	1
-PT3	022.0312	Terminale a puntale da (Nero)			Wire Terminal Connection Black		1,5mmq DZ5CE015	29	1
-Q-K4	E000610	Rele termico 0.7 - 1.1 A			Thermal overload 0.7 - 1.1 A		E000610	6	1
-Q-K6	E000610	Rele termico 0.7 - 1.1 A			Thermal overload 0.7 - 1.1 A		E000610	7	1
-Q-K65	E002541	Rele termico 2.5-4.1 A			Thermal overload 2.5-4.1 A		E002541	6	1
-Q-K6R	E000610	Rele termico 0.7 - 1.1 A			Thermal overload 0.7 - 1.1 A		E000610	7	1
-Q0	022.3065	Interruttore Magnetotermico scatolato 15-20A, 25KA					NZMB1- A20-NA; EATON	5	1
	022.1032	Comando bloccaporta NZM1-XHB-DAR-NA			Rotary handle door lock PNZM1-XHB-DAR-NA		NZM1-XHB-DAR-NA cod: 125959		1
-QD1								29	1
-R-M20	E000235	anello di tenuta			Ring 'Ni - 18 - 25 - 4,5		E000235	26	1
	E003749	Manopola in antracite per pannello con Icona Hydmech			Anthracite Knob with Hydmech Icon		010.3749		1
	E001322	Pannello encoder MEP 50			Panel encoder MEP 50		022.1322		1
-R-M21	E001322	Pannello encoder MEP 50			Panel encoder MEP 50		022.1322	26	1
	E000235	anello di tenuta			Ring 'Ni - 18 - 25 - 4,5		E000235		1
	E003749	Manopola in antracite per pannello con Icona Hydmech			Anthracite Knob with Hydmech Icon		010.3749		1
-R-M25	E003753	Manopola alluminio argento per Icona Hydmech			Silver Knob with Hydmech Icon		010.3753	23	1
	E000235	anello di tenuta			Ring 'Ni - 18 - 25 - 4,5		E000235		1
	E001816	Potenziometro 10K, turno singlo			Potentiometer 10K single turm		E001816		1
-R0	E000005	Tensionatore elettronico 3,5 T (cella di carico)			Electronic tensioner 3,5T (strain gauge)		E000005	23	1
-R10	E001000	Resistore 1W 680ohm			Resistor 1W 680ohm		E001000	23	1
-RE10	022.0209	Raccordo rapido dritto PG29/Ø35			Rapid straight Joint PG29/Ø35		SEM PG29/Ø35	30	1
-RE11	022.0209	Raccordo rapido dritto PG29/Ø35			Rapid straight Joint PG29/Ø35		SEM PG29/Ø35	30	1
-RSE1	022.3290	Modulo espansione 3NO+1NC Ple			Expansion module 3NO +1NC		CS ME03VU24 - PIZZATO	11	1
-RSE2	022.3290	Modulo espansione 3NO+1NC Ple			Expansion module 3NO +1NC		CS ME03VU24 - PIZZATO	14	1
-S18	E001405	Pulsante nero			Black push button		E001405	19	1
	E000937	Blocchetto NA			Normally open contact		E000937		1
	E000911	Portacontatti per pulsantiera			Carrier for push button		E000911		1

REV.	MODIFICA	DATA	FIRME
R.0.3	BOM review	06/11/2018	Solfanelli
R0.2.	Added RSE2 safety module	24/10/2018	Solfanelli
R0.1	Con Cablaggio per inverter MITSUBISHI FR-D700	03/09/2018	Solfanelli

Dis. N. H320A/240ULCSA/5118
CAD SPAC
File H320A\1.dwg
Data 19/12/2018

Impianto/Plant: Schematic H-320A_240/60Hz PLC HW 1

Denominazione/Title: DISTINTA MATERIALI
Material List

Ordine/Requisition
Commessa/Order: H-320A
Esecutore/Executor: Solfanelli

MEP

Foglio/Page 41
Segue/Follow 42
Ultimo/Last 217

Nome/Item	MEP CODE	Descrizione/Description	Descrizione EN	Codice Interno	Fg/Sh	Q.ta/Q.ty
-S3	E001408	Pulsante Blu	Blue push button	E001408	19	1
	E000937	Blocchetto NA	Normally open contact	E000937		4
	E000911	Portacontatti per pulsantiera	Carrier for push button	E000911		1
-S54	E000932	contatto pulsantiera NA	Normally open contact	E000932	19	4
	E003920	Joystick 4 posizioni instabile con sblocco	Joystick 4 positions unstable withunlocking	E003920		1
-SE2	E000932	contatto pulsantiera NA	Normally open contact	E000932	18	1
	E000911	Portacontatti per pulsantiera	Carrier for push button	E000911		1
	E001405	Pulsante nero	Black push button	E001405		1
-SF1	047.0182	Sacchetto portafusibili	Printed envelopes		29	1
-SLP		Commutatore NO a ritorno automatico			14	1
-T1		Trasformatore di potenza a due avvolgimenti con schermo			8	1
-TF1	031.2622	Targa sostituzione fusibili	Replace fuse adhesive sign		29	1
-TF2	025.0604	Guarnizione aerstop	Control panel gasket		29	1
-U10	E001230	Azionamento per motori (60 VAC.10A) con modbus	Driver for step motor (60 VAC.10A) + modbus	022.1330	9	1
-X008	E000429	Connettore elettrovalvola DC	Connector for Solenoid valva DC	E000429	21	1
-X009	E000429	Connettore elettrovalvola DC	Connector for Solenoid valva DC	E000429	21	1
-X010	E000429	Connettore elettrovalvola DC	Connector for Solenoid valva DC	E000429	21	1
-X011	E000429	Connettore elettrovalvola DC	Connector for Solenoid valva DC	E000429	21	1
-X012	E000429	Connettore elettrovalvola DC	Connector for Solenoid valva DC	E000429	21	1
-X014	E000429	Connettore elettrovalvola DC	Connector for Solenoid valva DC	E000429	21	1
-X100	022.0764	Inverter 380-480V 7,5KW FR-D740-160SC	Inverter 380-480V 7,5KW FR-D740-160SC	FR-D740-160SC MITSUBISHI	6	1
-X40	E000429	Connettore elettrovalvola DC	Connector for Solenoid valva DC	E000429	21	1
-X41	E000429	Connettore elettrovalvola DC	Connector for Solenoid valva DC	E000429	21	1
-X42	E000429	Connettore elettrovalvola DC	Connector for Solenoid valva DC	E000429	21	1
-XFET	022.0281 + 022.0262	Connettore fisso ILME (CK03I + CKF03)	Fixed connector ILME (CK03I + CKF03)	CK03I + CKF03		1
-XQG1	022.2258	Morsetto da 2.5 mm singolo per 4 fili a molla	Quadruple pole spring terminal 2,5mmq	56.703.5155.0		3
-XQG2	022.2219	Morsetto 2.5(4)mmq per 4 fili a molla - PHOENIX	Terminal 2.5(4)mmq for 4 wires - PHOENIX	D-STTB-2.5_3031270		4
	022.2245	Morsetto 2,5(4)mmq per 4 fili a molla - PHOENIX	Terminal 2,5(4)mmq for 4 wires - PHOENIX	ST2,5- QUATTRO_3031306		4
	022.2258	Morsetto da 2.5 mm singolo per 4 fili a molla	Quadruple pole spring terminal 2,5mmq	56.703.5155.0		8
-XQG3	022.2245	Morsetto 2,5(4)mmq per 4 fili a molla - PHOENIX	Terminal 2,5(4)mmq for 4 wires - PHOENIX	ST2,5- QUATTRO_3031306		3
-XQG4	022.2243	Morsetto 2,5(4)mmq per 2 fili a molla - PHOENIX	Terminal 2,5(4)mmq for 2 wires - PHOENIX	ST2,5- 3031212		4
	022.2256	Morsetto da 2.5 mm singolo per 2 fili a molla	Single pole spring terminal 2,5mmq	56.703.0055.0		22
-XQGPE	022.2321	Barra da 15x15mm con 10 fori 6mm				11
-XTL	022.0376	Connettore F303N5000 per prossimity con 5Mt di cavo.	Connettor F303N5000 for connector with 5Mt cable.	022.0376		1
-Z1	E002903	Toroide nucleo di ferrite N30 r40	Ferrites toroid core N30 R40	E002903	6	1
-Z2	E002903	Toroide nucleo di ferrite N30 r40	Ferrites toroid core N30 R40	E002903	6	1
-Z3	E002903	Toroide nucleo di ferrite N30 r40	Ferrites toroid core N30 R40	E002903	25	1
-Z4	E002903	Toroide nucleo di ferrite N30 r40	Ferrites toroid core N30 R40	E002903	9	1
-M5	P000008	Motore 0.37KW, 240/480V , 1.77/0.89A	Motor 0.37KW, 240/480V , 1.77/0.89A	P000008	7	1
-RE4	022.0210	Raccordo rapido dritto	Rapid straight Joint PG11/Ø16	SEM PG11/Ø16	30	1
	022.0281	Custodia plastica da incasso 1 leva Gr 21.21	Plastic Case Embedding One Lever Gr 21.21	CK 03 I- ILME		1
	022.0282	Custodia plastica mobile PG11 con pioli Gr 21.21	Plastic Case Embedding PG11 Gr 21.21	CK 03 VS - ILME		1
-RE5	022.0210	Raccordo rapido dritto	Rapid straight Joint PG11/Ø16	SEM PG11/Ø16	30	1
	022.0281	Custodia plastica da incasso 1 leva Gr 21.21	Plastic Case Embedding One Lever Gr 21.21	CK 03 I- ILME		1
	022.0282	Custodia plastica mobile PG11 con pioli Gr 21.21	Plastic Case Embedding PG11 Gr 21.21	CK 03 VS - ILME		1

REV.	MODIFICA	DATA	FIRME
R.0.3	BOM review	06/11/2018	Solfanelli
R0.2.	Added RSE2 safety module	24/10/2018	Solfanelli
R0.1	Con Cablaggio per inverter MITSUBISHI FR-D700	03/09/2018	Solfanelli

Dis. N. H320A/240ULCSA/5118
CAD SPAC
File H320A\1.dwg
Data 19/12/2018

Impianto/Plant: Schematic H-320A_240/60Hz PLC HW 1
Denominazione/Title: DISTINTA CAVI
Cable list

Ordine/Requisition
Commessa/Order: H-320A
Esecutore/Executor: Solfanelli

Foglio/Page 42
Segue/Follow 43
Ultimo/Last 217

0	1	2	3	4	5	6	7	8	9
Nome/Item	MEP CODE	Descrizione/Description			Descrizione EN		Codice Interno	Fg/Sh	Q.ta/Q.ty
XMET	022.0282 + 022.0261	Connettore volante ILME (CK03VS pioli + CKM03)			Mobile connector ILME (CK03VS + CKM03) 4 poles		CK03VS + CKM03		1
-S23	E001405	Pulsante nero			Black push button		E001405	20	1
	E000937	Blocchetto NA			Normally open contact		E000937		1
	E000911	Portacontatti per pulsantiera			Carrier for push button		E000911		1
-XR0	022.0369	Connettore 3 poli per tensionatore elettronico			Connector 3-poles for strain gauge		022.0369		1
-XS7	022.0369	Connettore 3 poli per tensionatore elettronico			Connector 3-poles for strain gauge		022.0369		1

REV.	MODIFICA	DATA	FIRME
R.0.3	BOM review	06/11/2018	Solfanelli
R0.2.	Added RSE2 safety module	24/10/2018	Solfanelli
R0.1	Con Cablaggio per inverter MITSUBISHI FR-D700	03/09/2018	Solfanelli

Dis. N. H320A/240ULCSA/5118
CAD SPAC
File H320A\1.dwg
Data 19/12/2018

Impianto/Plant
Schematic H-320A_240/60Hz
PLC HW 1

Denominazione/Title
Distinta Materiali
MATERIAL LIST

Ordine/Requisition
Commessa/Order H-320A
Esecutore/Executor Solfanelli

Foglio/Page 43
Segue/Follow 100
Ultimo/Last

LISTA FOGLI \ INDEX

Note :

REV.	MODIFICA	DATA	FIRME
R.0.3	BOM review	06/11/2018	Solfanelli
R0.2.	Added RSE2 safety module	24/10/2018	Solfanelli
R0.1	Con Cablaggio per inverter MITSUBISHI FR-D700	03/09/2018	Solfanelli

Dis. N. H320A/480ULCSA/4618
CAD SPAC
File H320A\1.dwg
Data 12/11/2018

Impianto/Plant
Schematic H-320A_480/60Hz
PLC HW 1

Denominazione/Title
INDICE CONTENUTI
Content Index

Ordine/Requisition
Commessa/Order H-320A
Esecutore/Executor Solfanelli

Foglio/Page 1
Segue/Follow 2
Ultimo/Last 217

LISTA FOGLI \ INDEX

Note :

REV.	MODIFICA	DATA	FIRME
R.0.3	BOM review	06/11/2018	Solfanelli
R0.2.	Added RSE2 safety module	24/10/2018	Solfanelli
R0.1	Con Cablaggio per inverter MITSUBISHI FR-D700	03/09/2018	Solfanelli

Dis. N. H320A/480ULCSA/4618
CAD SPAC
File H320A\1.dwg
Data 12/11/2018

Impianto/Plant: Schematic H-320A_480/60Hz PLC HW 1
Denominazione/Title: INDICE CONTENUTI / Content Index

Ordine/Requisition
Commessa/Order: H-320A
Esecutore/Executor: Solfanelli

MEP

Foglio/Page: 2
Segue/Follow: 3
Ultimo/Last: 217

Sim.\Sym.	File	Descrizione\Description
	H5	Lampada *Lamp*
	H11	LED *Led*
	M2	Motore asincrono trifase *Three-phase inductor motor*
	M9	Motore corrente alternata monofase *Single-phase inductor motor*
	Q1360	Int. automatico magnetotermico sezionatore tripolare *Three-phase automatic switch*
	R1	Resistore *Resistor*
	R6	Potenziometro *Potentiometer*
	R60	Potenziometro *Potentiometer*
	S2	Comando a Pulsante NO *Push button NO*
	S4C	Pulsante di emergenza NC *Emergency push button NC*
	S5	Comando rotativo a due posizioni NO *Rotary selector two position*

Sim.\Sym.	File	Descrizione\Description
	S7	Comando a pedale NO *Control pedal NO*
	S13C	Fine corsa comandato a camma libero NC *Limit switch free NC*
	S14C	Fine corsa comandato a camma azionato NC *Limit switch actuated NC*
	S15C	Comandato dal livello di un fluido (livellostato) NC *Water gauge NC*
	T2	Trasformatore per ausiliari con schermo *Trasformer for auxiliary white shield*
	Y1	Elettrovalvola (A) *Solenoid valve (A)*
	Y1A	Elettrovalvola (B) *Solenoid valve (B)*
	KA1	Bobina rele' Aux *Auxiliary relay coil*
	KM1	Bobina contattore *Contactor coil*
	BLK11	Trasformatore per ausiliari con schermo *Trasformer for auxiliary white shield*
	BLK12	Inverter (potenza) *Inverter (power)*

Sim.\Sym.	File	Descrizione\Description
	BLK13	Azionamento (potenza) *Drive (power)*
	BLK14	Inverter (ausiliari) *Inverter (auxiliary)*
	BLK15	Azionamento (ausiliari) *Drive (auxiliary)*
	BLK21	Motore passo-passo *Stepper motor*
	BLK41	Raccordo SX *Connector SX*
	BLK42	Raccordo DX *Connector DX*
	BLK43	Tubo corrugato *Corrugated pipe*
	BLK44	Riduzione PG *PG adapter*
	BLK51	Dado PG *PG nut*
	BLK56	Terminale a puntale *Terminal*
	BLK57	Filo unipolare *Wire*

REV.	MODIFICA	DATA	FIRME
R.0.3	BOM review	06/11/2018	Solfanelli
R0.2.	Added RSE2 safety module	24/10/2018	Solfanelli
R0.1	Con Cablaggio per inverter MITSUBISHI FR-D700	03/09/2018	Solfanelli

Dis. N. H320A/480ULCSA/4618
CAD SPAC
File H320A\1.dwg
Data 12/11/2018

Impianto/Plant
Schematic H-320A_480/60Hz PLC HW 1

Denominazione/Title
LEGENDA SIMBOLI
Symbol Key

Ordine/Requisition
Commessa/Order H-320A
Esecutore/Executor Solfanelli

Foglio/Page 3
Segue/Follow 4
Ultimo/Last 217

Sim.\Sym.	File	Descrizione\Description
	BLK58	Fascette plastiche di fissaggio *Plastic clamp*
	BLK60	Terminale a occhiello *Terminal*
	BLK66	Sacchetto portafusibile *Bag fuse*
Fe	SPX08E	Dispositivo di prossimita' induttivo D.C. NO *Sensor of proximity fed DC NO*

Sim.\Sym.	File	Descrizione\Description

Sim.\Sym.	File	Descrizione\Description

REV.	MODIFICA	DATA	FIRME
R.0.3	BOM review	06/11/2018	Solfanelli
R0.2.	Added RSE2 safety module	24/10/2018	Solfanelli
R0.1	Con Cablaggio per inverter MITSUBISHI FR-D700	03/09/2018	Solfanelli

Dis. N. H320A/480ULCSA/4618
CAD SPAC
File H320A\1.dwg
Data 12/11/2018

Impianto/Plant: *Schematic H-320A_480/60Hz PLC HW 1*

Denominazione/Title: LEGENDA SIMBOLI
Symbol Key

Ordine/Requisition
Commessa/Order: H-320A
Esecutore/Executor: Solfanelli

MEP

Foglio/Page: 4
Segue/Follow: 5
Ultimo/Last: 217

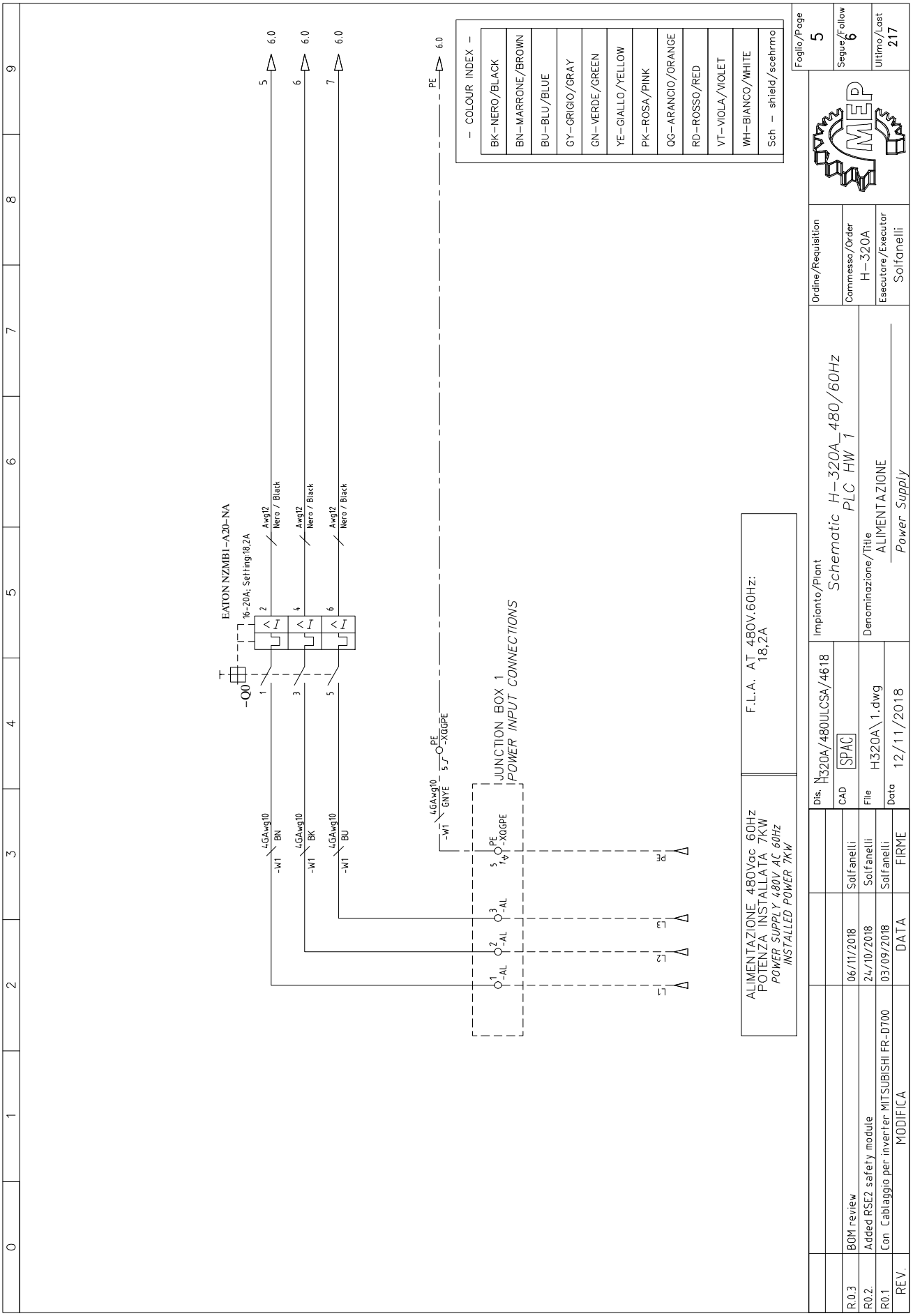
EATON NZMB1-A20-NA
16-20A; Setting:18,2A
-Q0
Awg12
Nero / Black
4GAwg10
BN
BK
BU
-W1
-AL
-XQGPE
PE
JUNCTION BOX 1
POWER INPUT CONNECTIONS
4GAwg10
GNYE
-XQGPE
6.0
- COLOUR INDEX -
BK-NERO/BLACK
BN-MARRONE/BROWN
BU-BLU/BLUE
GY-GRIGIO/GRAY
GN-VERDE/GREEN
YE-GIALLO/YELLOW
PK-ROSA/PINK
QG-ARANCIO/ORANGE
RD-ROSSO/RED
VT-VIOLA/VIOLET
WH-BIANCO/WHITE
Sch - shield/scehrmo
F.L.A. AT 480V.60Hz:
18,2A
ALIMENTAZIONE 480Vac 60Hz
POTENZA INSTALLATA 7KW
POWER SUPPLY 480V AC 60Hz
INSTALLED POWER 7KW
Foglio/Page
5
Segue/Follow
6
Ultimo/Last
217
Ordine/Requisition
Commessa/Order
H-320A
Esecutore/Executor
Solfanelli
Impianto/Plant
Schematic H-320A_480/60Hz
PLC HW 1
Denominazione/Title
ALIMENTAZIONE
Power Supply
Dis. H320A/480ULCSA/4618
CAD SPAC
File H320A\1.dwg
Data 12/11/2018
R0.3 BOM review 06/11/2018 Solfanelli
R0.2. Added RSE2 safety module 24/10/2018 Solfanelli
R0.1 Con Cablaggio per inverter MITSUBISHI FR-D700 03/09/2018 Solfanelli
REV. MODIFICA DATA FIRME

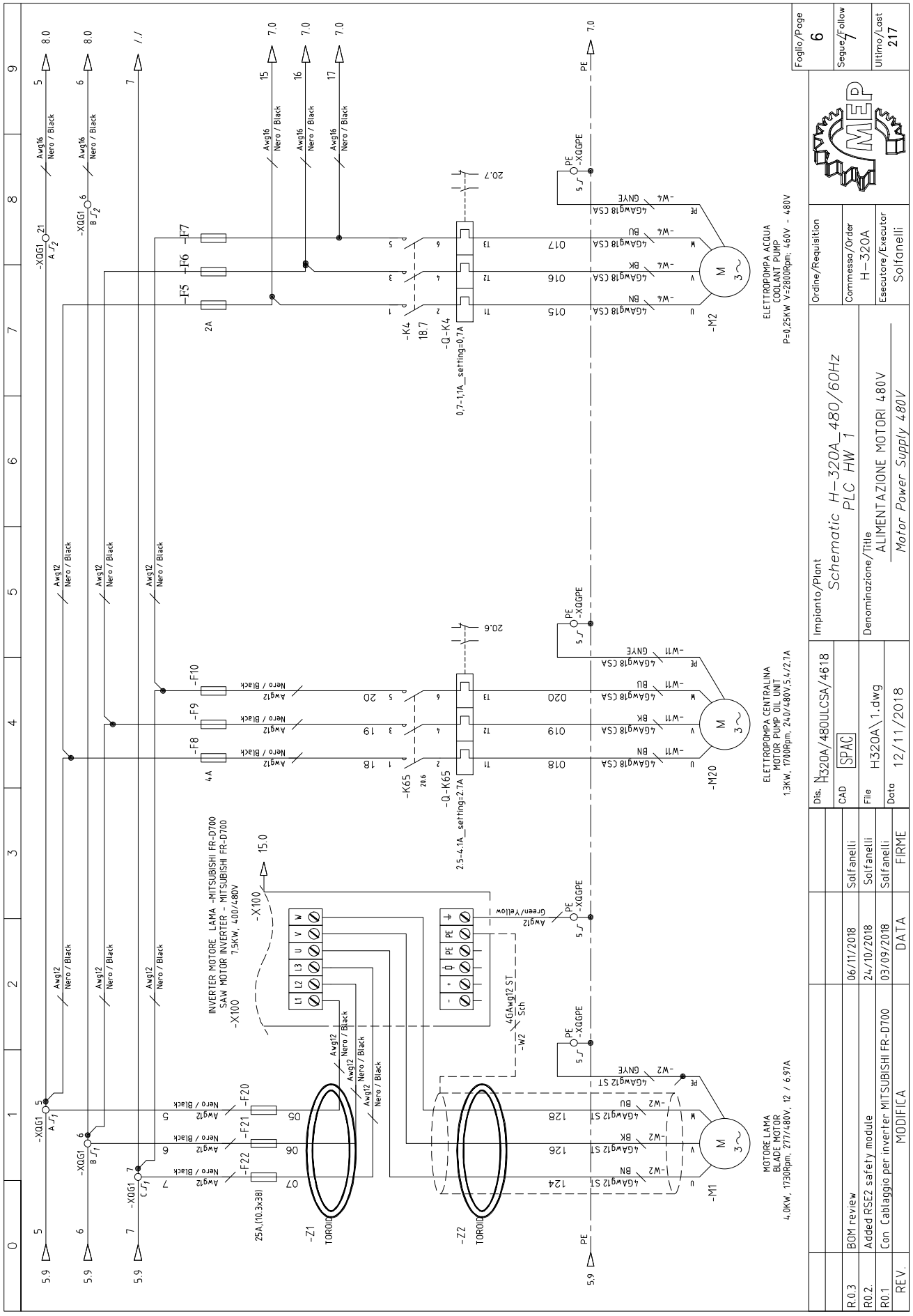
Foglio/Page 6
Segue/Follow 7
Ultimo/Last 217
Ordine/Requisition
Commessa/Order H-320A
Esecutore/Executor Solfanelli
Impianto/Plant
Schematic H-320A 480/60Hz
PLC HW 1
Denominazione/Title
ALIMENTAZIONE MOTORI 480V
Motor Power Supply 480V
Dis. H320A/480ULCSA/4618
CAD SPAC
File H320A\1.dwg
Data 12/11/2018
R0.3 BOM review 06/11/2018 Solfanelli
R0.2. Added RSE2 safety module 24/10/2018 Solfanelli
R0.1 Con Cablaggio per inverter MITSUBISHI FR-D700 03/09/2018 Solfanelli
REV. MODIFICA DATA FIRME
ELETTROPOMPA ACQUA
COOLANT PUMP
P=0,25KW V=2800Rpm; 460V - 480V
ELETTROPOMPA CENTRALINA
MOTOR PUMP OIL UNIT
1,3KW, 1700Rpm, 240/480V,5,4/2,7A
MOTORE LAMA
BLADE MOTOR
4,0KW, 1730Rpm, 277/480V, 12 / 6,97A
INVERTER MOTORE LAMA -MITSUBISHI FR-D700
SAW MOTOR INVERTER - MITSUBISHI FR-D700
7,5KW, 400/480V
-X100
-K4
-K65
-Q-K4
-Q-K65
0,7-1,1A_setting=0,7A
2,5-4,1A_setting=2,7A
-M1
-M2
-M20
-Z1
-Z2
TOROID
25A,(10,3x38)
-XQG1
-XQGPE
-F5
-F6
-F7
-F8
-F9
-F10
-F20
-F21
-F22
-W2
-W4
-W11
4GAwg12 ST
4GAwg18 CSA
Awg12
Awg16
Nero / Black
Green/Yellow

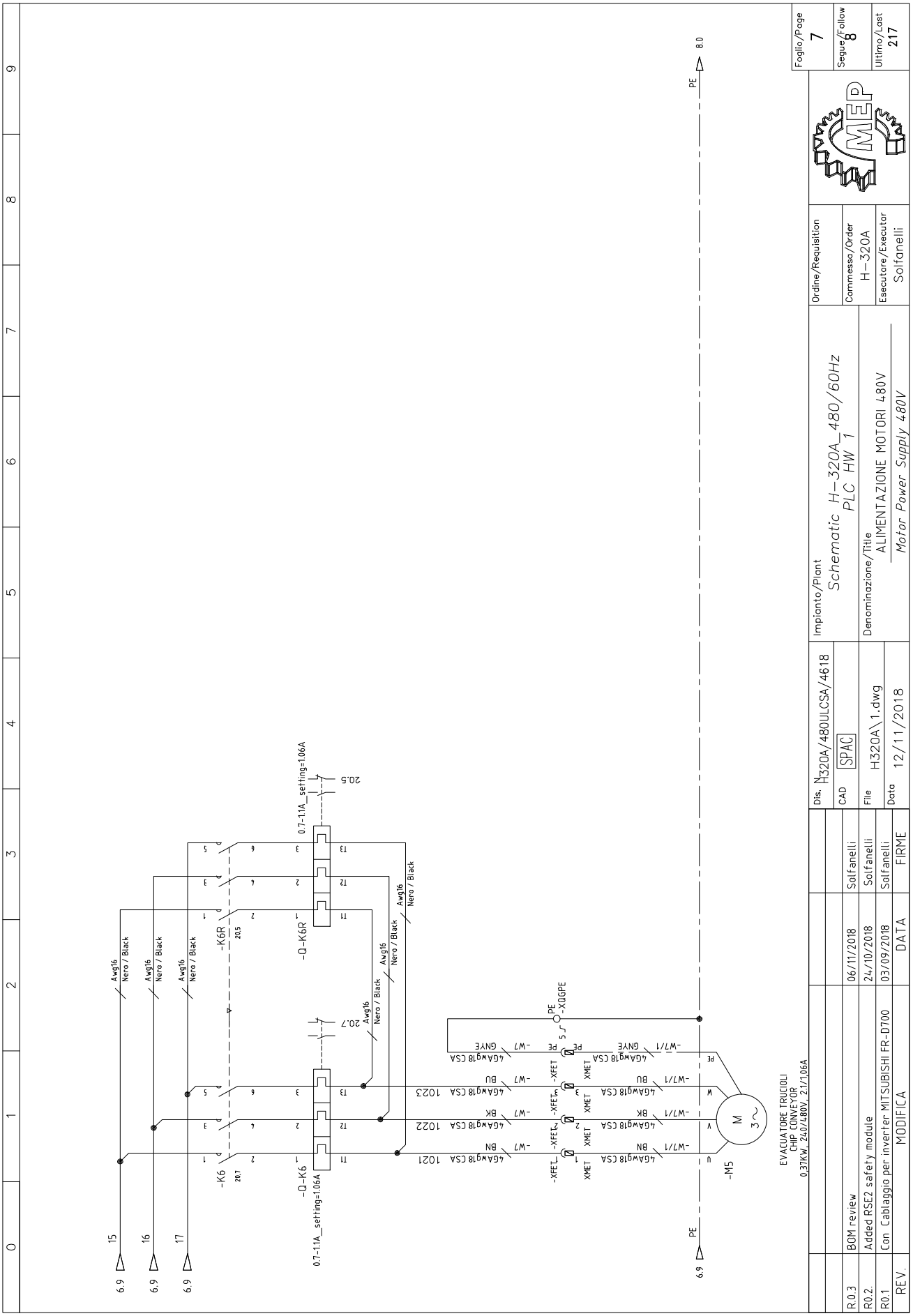
Foglio/Page 7
Segue/Follow 8
Ultimo/Last 217
Ordine/Requisition
Commessa/Order H-320A
Esecutore/Executor Solfanelli
Impianto/Plant
Schematic H-320A_480/60Hz
PLC HW 1
Denominazione/Title
ALIMENTAZIONE MOTORI 480V
Motor Power Supply 480V
Dis. H320A/480ULCSA/4618
CAD SPAC
File H320A\1.dwg
Data 12/11/2018
EVACUATORE TRUCIOLI
CHIP CONVEYOR
0,37KW, 240/480V, 21/1,06A
-M5
-Q-K6
-Q-K6R
-K6
-K6R
-XQGPE
R0.3 BOM review 06/11/2018 Solfanelli
R0.2. Added RSE2 safety module 24/10/2018 Solfanelli
R0.1 Con Cablaggio per inverter MITSUBISHI FR-D700 03/09/2018 Solfanelli
REV. MODIFICA DATA FIRME

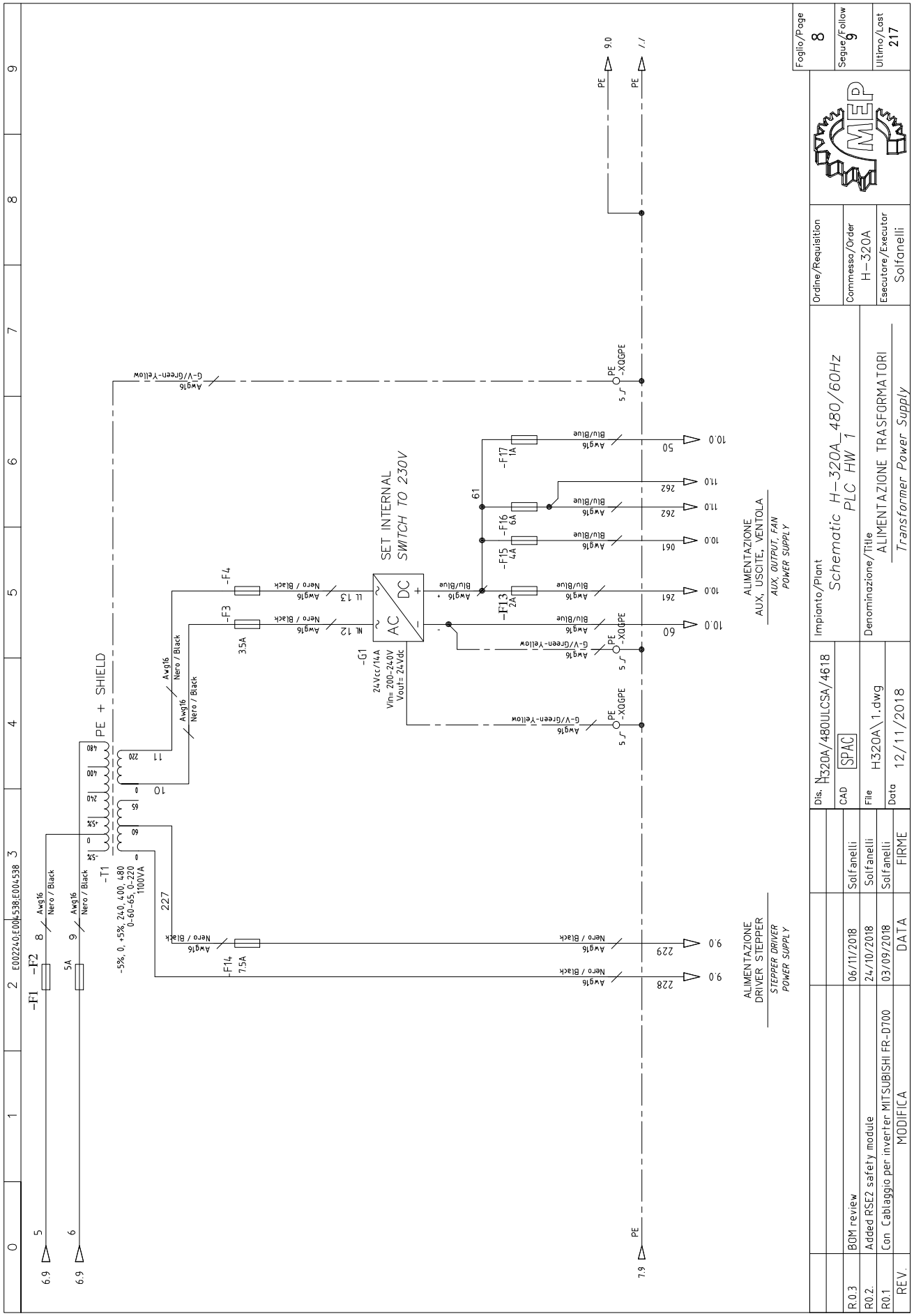
Foglio/Page 8
Segue/Follow 9
Ultimo/Last 217
Ordine/Requisition
Commessa/Order H-320A
Esecutore/Executor Solfanelli
Impianto/Plant
Schematic H-320A 480/60Hz
PLC HW 1
Denominazione/Title
ALIMENTAZIONE TRASFORMATORI
Transformer Power Supply
Dis. H320A/480ULCSA/4618
CAD SPAC
File H320A\1.dwg
Data 12/11/2018
REV. MODIFICA DATA FIRME
R0.3 BOM review 06/11/2018 Solfanelli
R0.2. Added RSE2 safety module 24/10/2018 Solfanelli
R0.1 Con Cablaggio per inverter MITSUBISHI FR-D700 03/09/2018 Solfanelli
SET INTERNAL
SWITCH TO 230V
-G1
24Vcc/14A
Vin= 200-240V
Vout= 24Vdc
AC DC
-T1
-5%, 0, +5%, 240, 400, 480
0-60-65, 0-220
1100VA
PE + SHIELD
-F1
-F2
5A
-F3
35A
-F4
-F13
2A
-F14
7.5A
-F15
4A
-F16
6A
-F17
1A
-XQGPE
ALIMENTAZIONE
AUX, USCITE, VENTOLA
AUX, OUTPUT, FAN
POWER SUPPLY
ALIMENTAZIONE
DRIVER STEPPER
STEPPER DRIVER
POWER SUPPLY
Awg16
Nero / Black
Blu/Blue
G-V/Green-Yellow
E002240;E004538;E004538

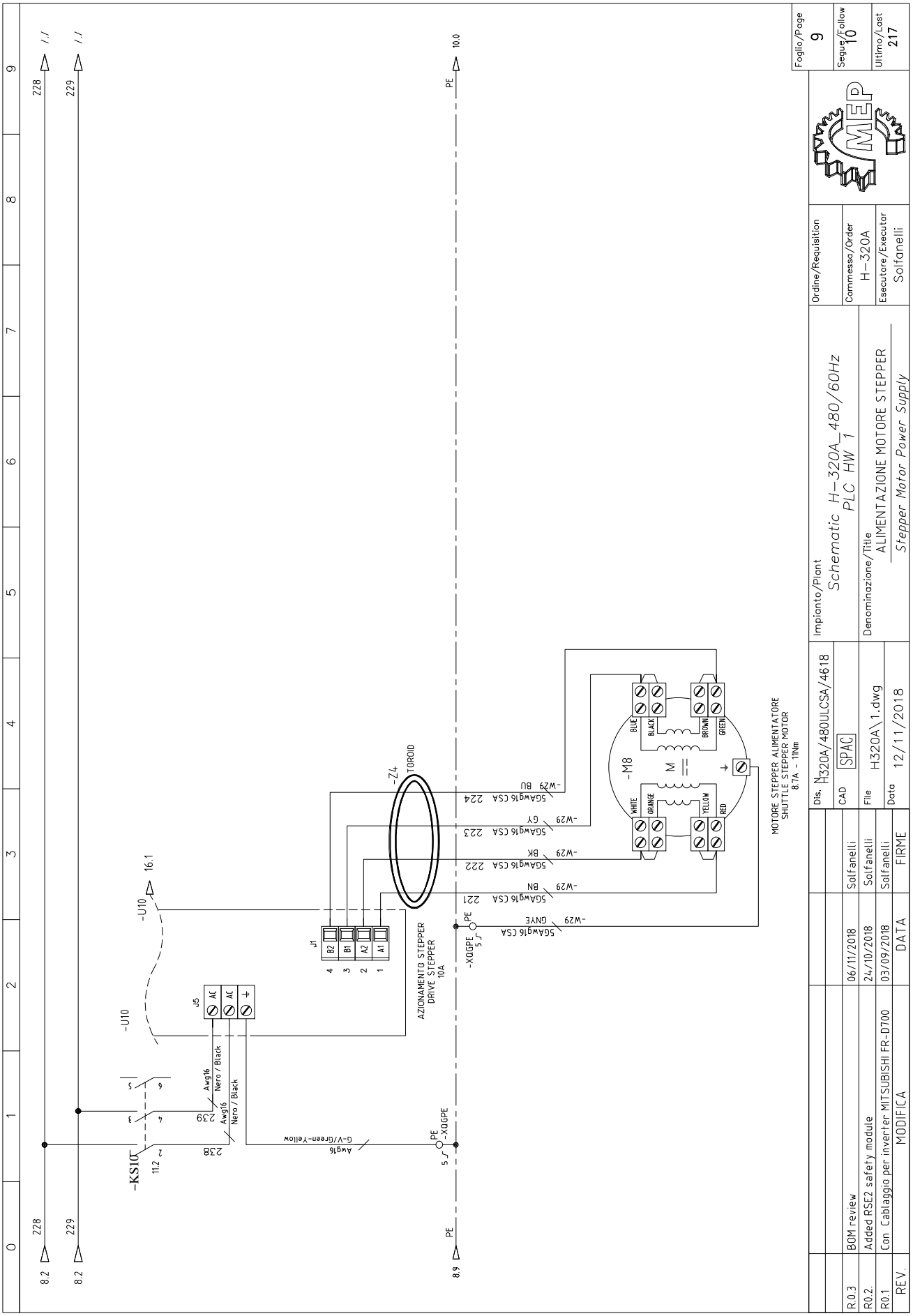
Foglio/Page 9
Segue/Follow 10
Ultimo/Last 217
Ordine/Requisition
Commessa/Order H-320A
Esecutore/Executor Solfanelli
Impianto/Plant
Schematic H-320A_480/60Hz
PLC HW 1
Denominazione/Title
ALIMENTAZIONE MOTORE STEPPER
Stepper Motor Power Supply
Dis. H320A/480ULCSA/4618
CAD SPAC
File H320A\1.dwg
Data 12/11/2018
R0.3 BOM review 06/11/2018 Solfanelli
R0.2. Added RSE2 safety module 24/10/2018 Solfanelli
R0.1 Con Cablaggio per inverter MITSUBISHI FR-D700 03/09/2018 Solfanelli
REV. MODIFICA DATA FIRME
-KS10
-U10
-Z4
TOROID
-M8
J1
J5
AZIONAMENTO STEPPER
DRIVE STEPPER
10A
MOTORE STEPPER ALIMENTATORE
SHUTTLE STEPPER MOTOR
8.7A - 11Nm
-XQGPE
-W29
5GAwg16 CSA
BLUE
BLACK
BROWN
GREEN
WHITE
ORANGE
YELLOW
RED
Awg16
Nero / Black
G-V/Green-Yellow
PE
228
229
8.2
8.9
10.0
16.1
11.2

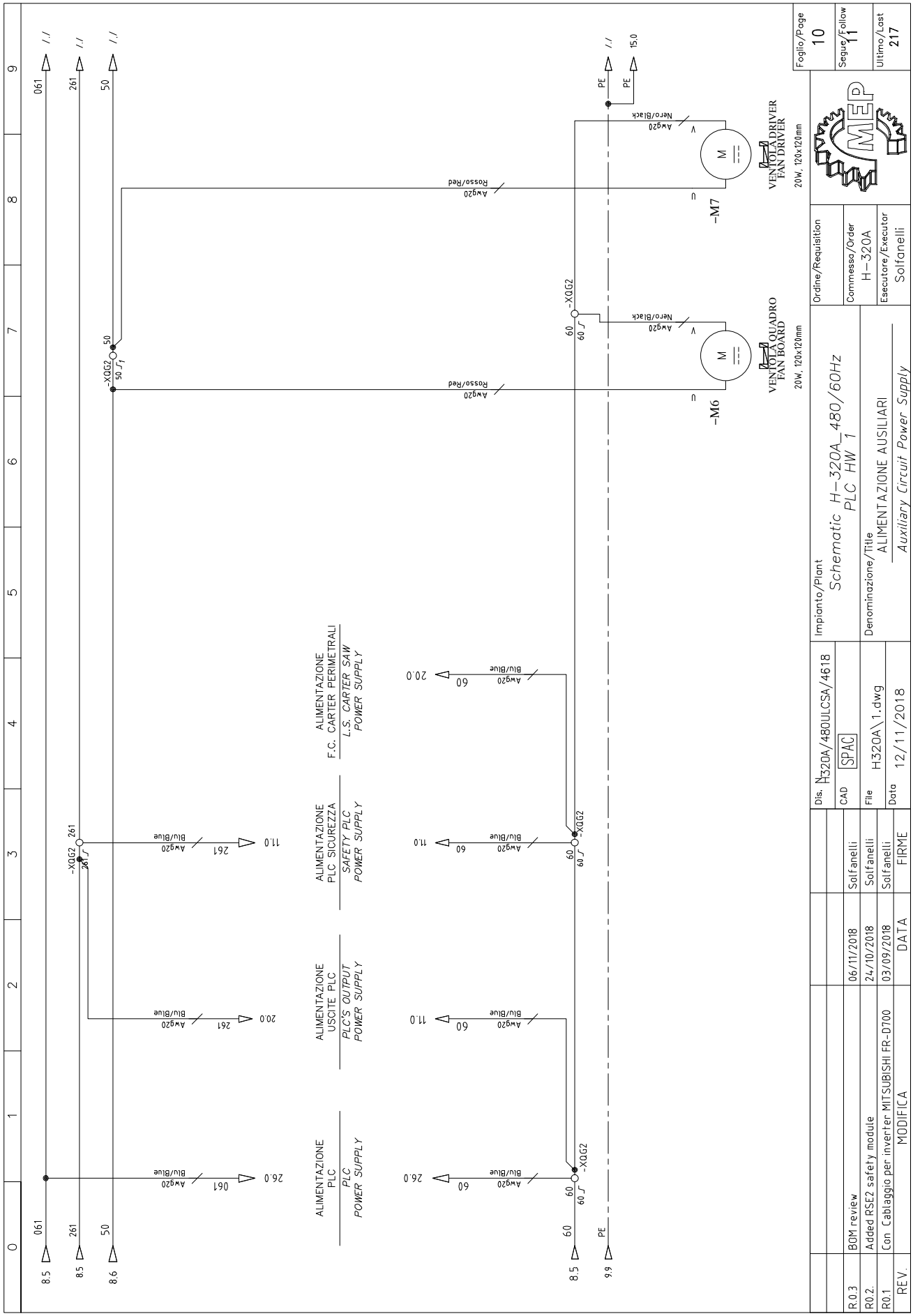
ALIMENTAZIONE PLC
PLC POWER SUPPLY
ALIMENTAZIONE USCITE PLC
PLC'S OUTPUT POWER SUPPLY
ALIMENTAZIONE PLC SICUREZZA
SAFETY PLC POWER SUPPLY
ALIMENTAZIONE F.C. CARTER PERIMETRALI
L.S. CARTER SAW POWER SUPPLY
VENTOLA DRIVER
FAN DRIVER
20W, 120x120mm
VENTOLA QUADRO
FAN BOARD
20W, 120x120mm
-M7
-M6
-XQG2
Rosso/Red
Nero/Black
Blu/Blue
Awg20
Foglio/Page 10
Segue/Follow 11
Ultimo/Last 217
Ordine/Requisition
Commessa/Order H-320A
Esecutore/Executor Solfanelli
Impianto/Plant
Schematic H-320A 480/60Hz
PLC HW 1
Denominazione/Title
ALIMENTAZIONE AUSILIARI
Auxiliary Circuit Power Supply
Dis. H320A/480ULCSA/4618
CAD SPAC
File H320A\1.dwg
Data 12/11/2018
R0.3 BOM review 06/11/2018 Solfanelli
R0.2 Added RSE2 safety module 24/10/2018 Solfanelli
R0.1 Con Cablaggio per inverter MITSUBISHI FR-D700 03/09/2018 Solfanelli
REV. MODIFICA DATA FIRME

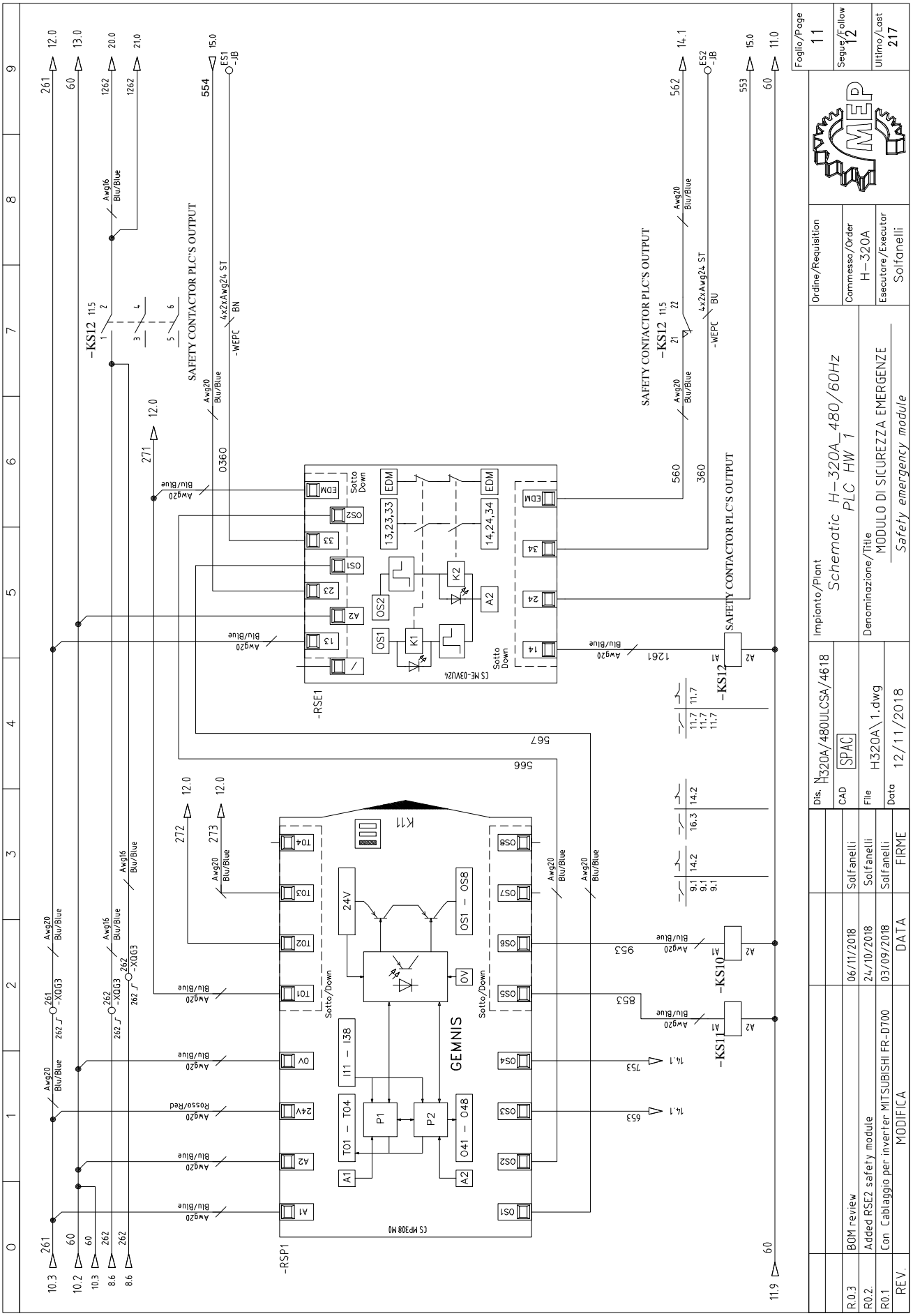
Foglio/Page 11
Segue/Follow 12
Ultimo/Last 217
Ordine/Requisition
Commessa/Order H-320A
Esecutore/Executor Solfanelli
Impianto/Plant
Schematic H-320A_480/60Hz
PLC HW 1
Denominazione/Title
MODULO DI SICUREZZA EMERGENZE
Safety emergency module
Dis. H320A/480ULCSA/4618
CAD SPAC
File H320A\1.dwg
Data 12/11/2018
R0.3 BOM review 06/11/2018 Solfanelli
R0.2 Added RSE2 safety module 24/10/2018 Solfanelli
R0.1 Con Cablaggio per inverter MITSUBISHI FR-D700 03/09/2018 Solfanelli
REV. MODIFICA DATA FIRME
SAFETY CONTACTOR PLC'S OUTPUT
-KS12
-KS10
-KS11
-RSE1
-RSP1
GEMNIS
CS ME-03VU24
CS MP308 M0
Awg20 Blu/Blue
Awg16 Blu/Blue
4x2xAwg24 ST
-WEPC
-XQG3
-JB

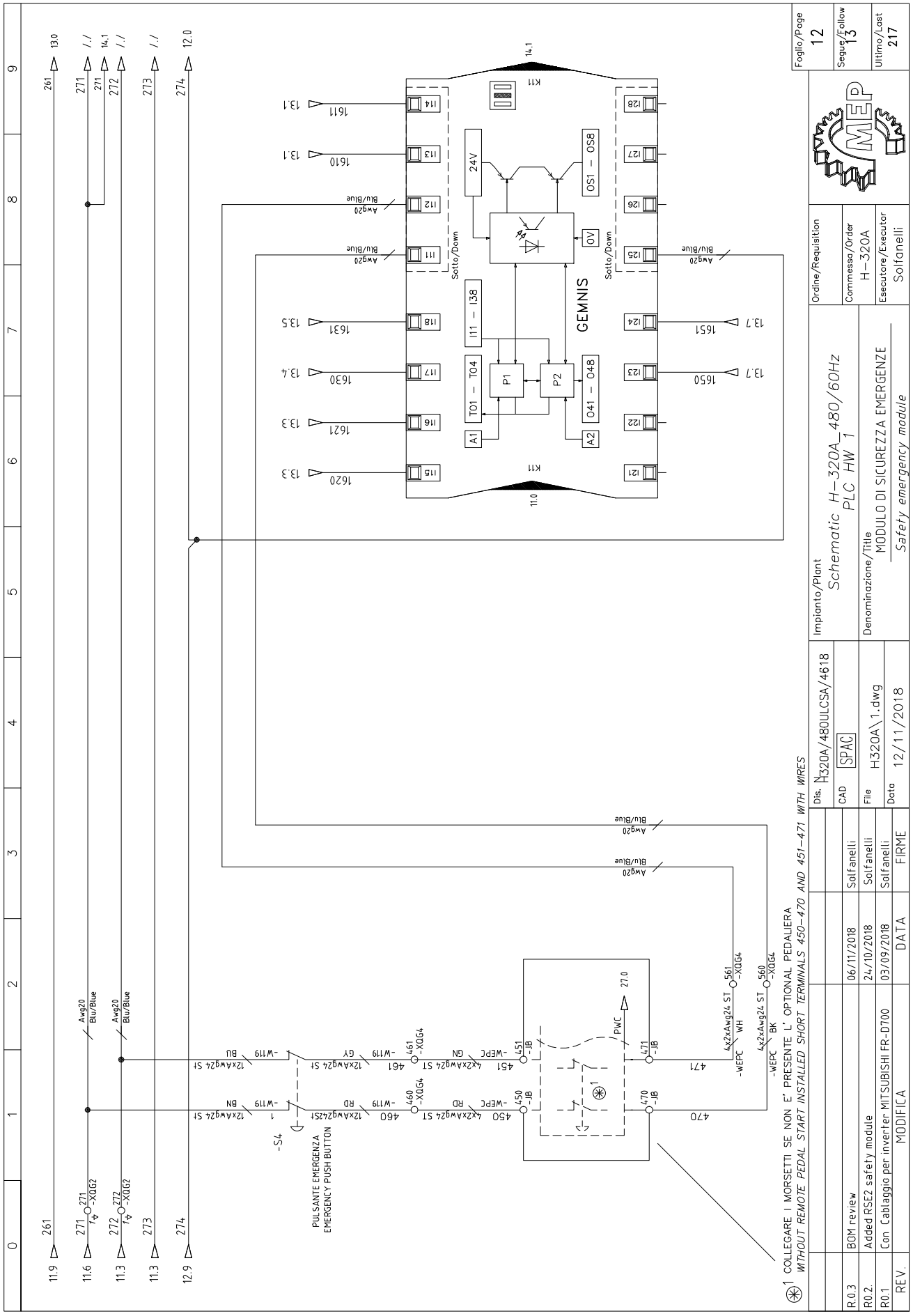
GEMNIS
24V
OS1 – OS8
0V
I11 – I38
T01 – T04
O41 – O48
P1
P2
A1
A2
Sotto/Down
Sotto/Down
PULSANTE EMERGENZA
EMERGENCY PUSH BUTTON
-S4
PWC
COLLEGARE I MORSETTI SE NON E' PRESENTE L' OPTIONAL PEDALIERA
WITHOUT REMOTE PEDAL START INSTALLED SHORT TERMINALS 450–470 AND 451–471 WITH WIRES
Foglio/Page 12
Segue/Follow 13
Ultimo/Last 217
Ordine/Requisition
Commessa/Order H–320A
Esecutore/Executor Solfanelli
Impianto/Plant Schematic H–320A 480/60Hz PLC HW 1
Denominazione/Title MODULO DI SICUREZZA EMERGENZE
Safety emergency module
Dis. H320A/480ULCSA/4618
CAD SPAC
File H320A\1.dwg
Data 12/11/2018
R0.3 BOM review 06/11/2018 Solfanelli
R0.2. Added RSE2 safety module 24/10/2018 Solfanelli
R0.1 Con Cablaggio per inverter MITSUBISHI FR-D700 03/09/2018 Solfanelli
REV. MODIFICA DATA FIRME

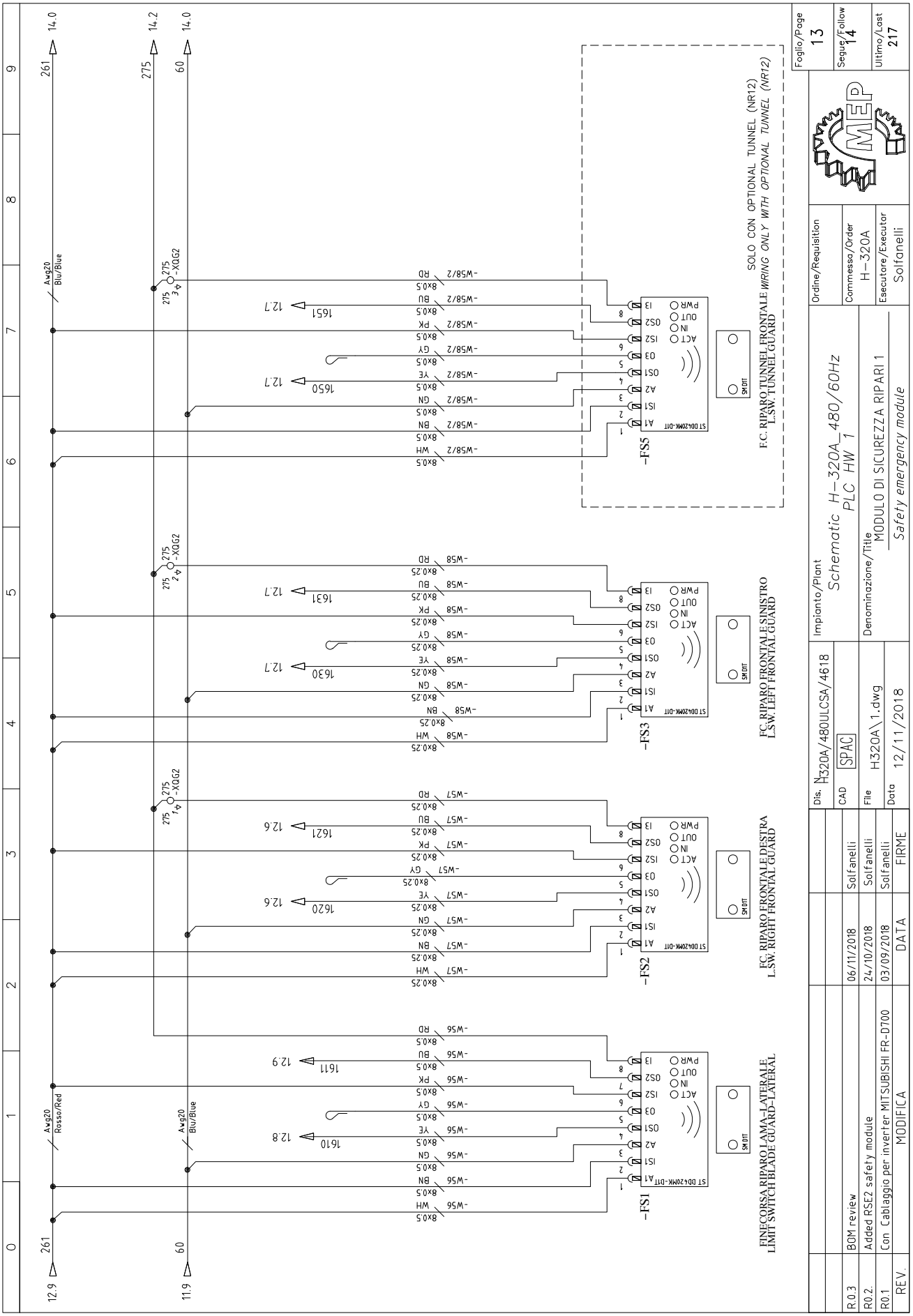
Foglio/Page 13
Segue/Follow 14
Ultimo/Last 217
Ordine/Requisition
Commessa/Order H-320A
Esecutore/Executor Solfanelli
Impianto/Plant
Schematic H-320A_480/60Hz PLC HW 1
Denominazione/Title
MODULO DI SICUREZZA RIPARI 1
Safety emergency module
Dis. H320A/480ULCSA/4618
CAD SPAC
File H320A\1.dwg
Data 12/11/2018
R0.3 BOM review 06/11/2018 Solfanelli
R0.2. Added RSE2 safety module 24/10/2018 Solfanelli
R0.1 Con Cablaggio per inverter MITSUBISHI FR-D700 03/09/2018 Solfanelli
REV. MODIFICA DATA FIRME
SOLO CON OPTIONAL TUNNEL (NR12)
WIRING ONLY WITH OPTIONAL TUNNEL (NR12)
F.C. RIPARO TUNNEL FRONTALE
L.SW. TUNNEL GUARD
FC. RIPARO FRONTALE SINISTRO
L.SW. LEFT FRONTAL GUARD
FC. RIPARO FRONTALE DESTRA
L.SW. RIGHT FRONTAL GUARD
FINECORSA RIPARO LAMA-LATERALE
LIMIT SWITCH BLADE GUARD-LATERAL
-FS1
-FS2
-FS3
-FS5
ST DD420MK-DIT
SM DIT
ACT
IN
OUT
PWR
IS1
IS2
OS1
OS2
A1
A2
O3
Awg20 Rosso/Red
Awg20 Blu/Blue
-XQG2
-W56
-W57
-W58
-W58/2
12.9
11.9
14.0
14.2
261
275
60
1651
1650
1631
1630
1621
1620
1611
1610
12.7
12.6
12.9
12.8

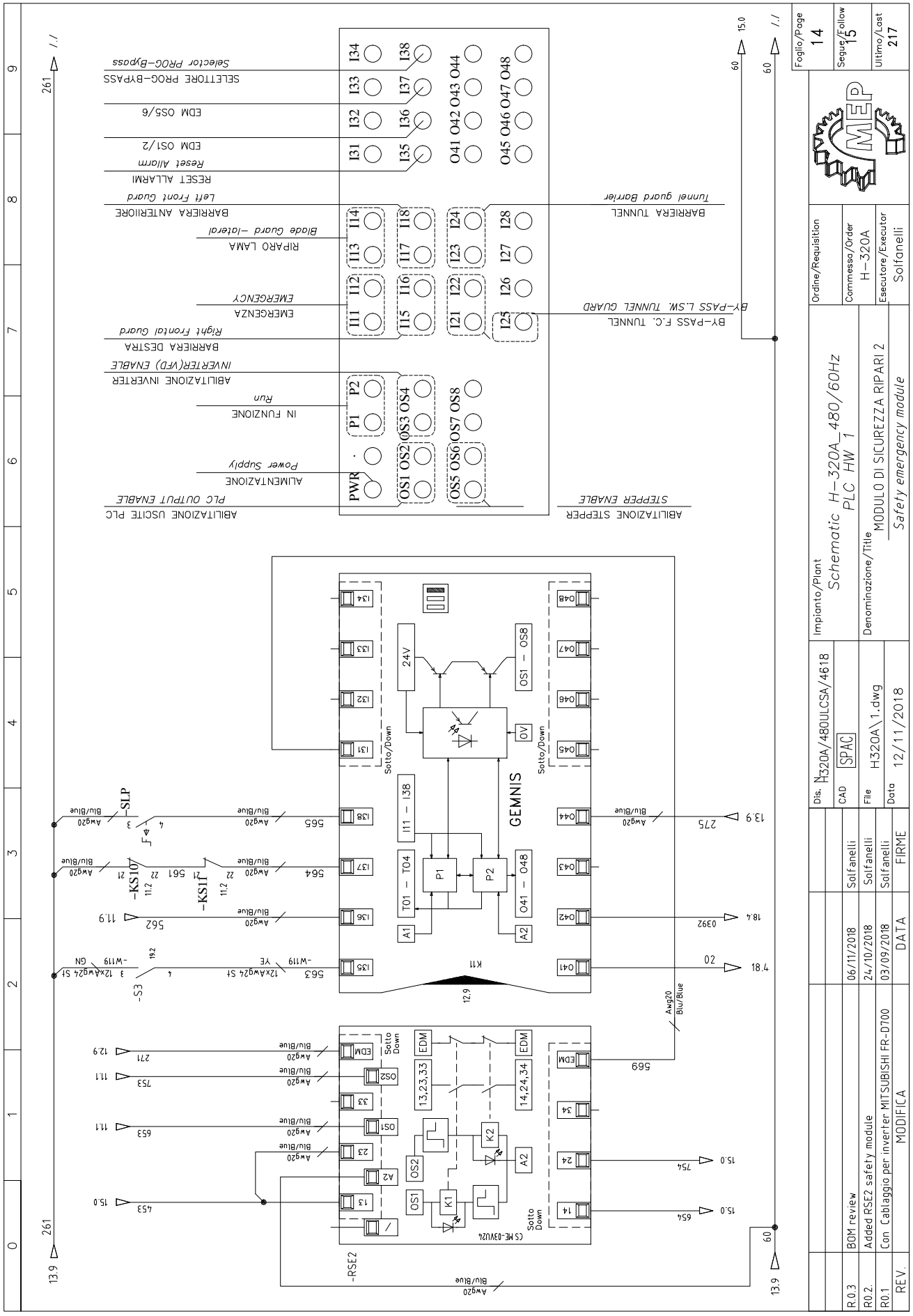
Foglio/Page 14
Segue/Follow 15
Ultimo/Last 217
Ordine/Requisition
Commessa/Order H-320A
Esecutore/Executor Solfanelli
Impianto/Plant
Schematic H-320A 480/60Hz
PLC HW 1
Denominazione/Title
MODULO DI SICUREZZA RIPARI 2
Safety emergency module
Dis. H320A/480ULCSA/4618
CAD SPAC
File H320A\1.dwg
Data 12/11/2018
R0.3 BOM review 06/11/2018 Solfanelli
R0.2 Added RSE2 safety module 24/10/2018 Solfanelli
R0.1 Con Cablaggio per inverter MITSUBISHI FR-D700 03/09/2018 Solfanelli
REV. MODIFICA DATA FIRME
ABILITAZIONE USCITE PLC
PLC OUTPUT ENABLE
ALIMENTAZIONE
Power Supply
IN FUNZIONE
Run
ABILITAZIONE INVERTER
INVERTER(VFD) ENABLE
BARRIERA DESTRA
Right Frontal Guard
EMERGENZA
EMERGENCY
RIPARO LAMA
Blade Guard -lateral
BARRIERA ANTERIORE
Left Front Guard
RESET ALLARMI
Reset Allarm
EDM OS1/2
EDM OS5/6
SELETTORE PROG-BYPASS
Selector PROG-Bypass
BARRIERA TUNNEL
Tunnel guard Barrier
BY-PASS F.C. TUNNEL
BY-PASS L.SW. TUNNEL GUARD
ABILITAZIONE STEPPER
STEPPER ENABLE
GEMNIS
-SLP
-KS10
-KS11
-S3
-RSE2

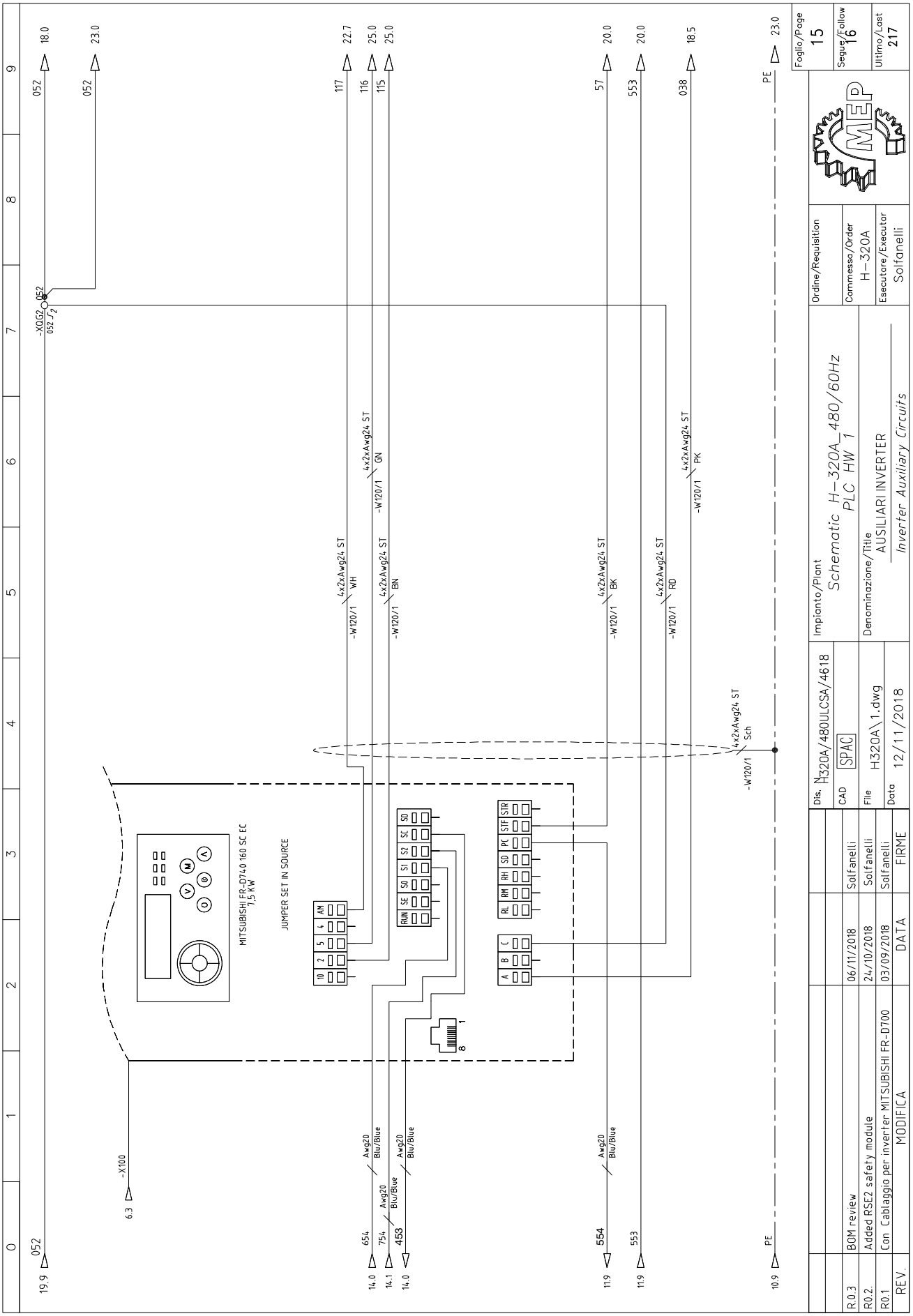
Foglio/Page 15
Segue/Follow 16
Ultimo/Last 217
Ordine/Requisition
Commessa/Order H-320A
Esecutore/Executor Solfanelli
Impianto/Plant
Schematic H-320A_480/60Hz PLC HW 1
Denominazione/Title
AUSILIARI INVERTER
Inverter Auxiliary Circuits
Dis. H320A/480ULCSA/4618
CAD SPAC
File H320A\1.dwg
Data 12/11/2018
R0.3 BOM review 06/11/2018 Solfanelli
R0.2. Added RSE2 safety module 24/10/2018 Solfanelli
R0.1 Con Cablaggio per inverter MITSUBISHI FR-D700 03/09/2018 Solfanelli
REV. MODIFICA DATA FIRME
MITSUBISHI FR-D740 160 SC EC 7,5 KW
JUMPER SET IN SOURCE
-X100
-XQG2
-W120/1
4x2xAwg24 ST
Awg20 Blu/Blue

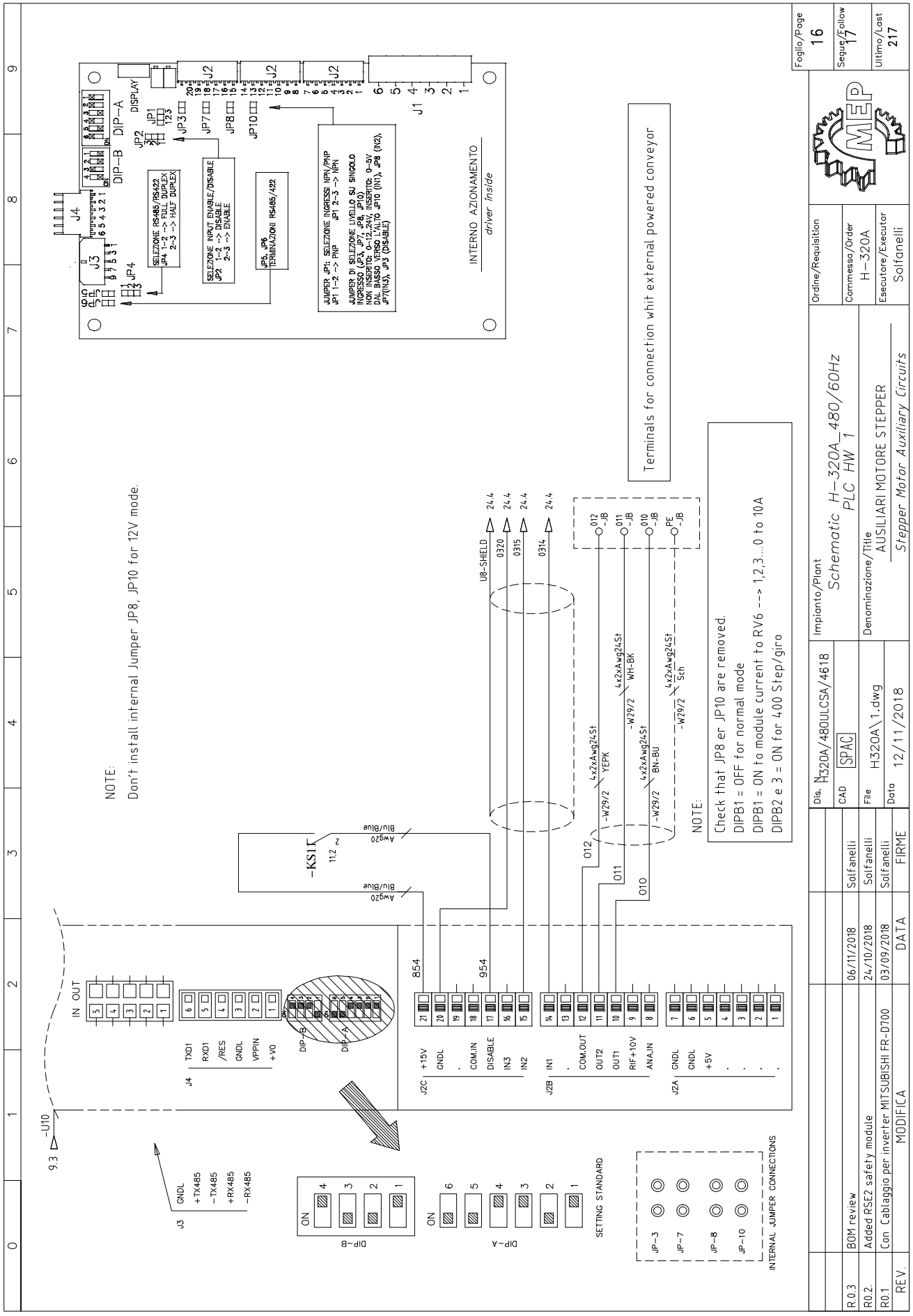
Foglio/Page 16
Segue/Follow 17
Ultimo/Last 217
Ordine/Requisition
Commessa/Order H-320A
Esecutore/Executor Solfanelli
Impianto/Plant
Schematic H-320A 480/60Hz
PLC HW 1
Denominazione/Title
AUSILIARI MOTORE STEPPER
Stepper Motor Auxiliary Circuits
Dis. H320A/480ULCSA/4618
CAD SPAC
File H320A\1.dwg
Data 12/11/2018
R0.3 BOM review 06/11/2018 Solfanelli
R0.2. Added RSE2 safety module 24/10/2018 Solfanelli
R0.1 Con Cablaggio per inverter MITSUBISHI FR-D700 03/09/2018 Solfanelli
REV. MODIFICA DATA FIRME
INTERNO AZIONAMENTO
driver inside
Terminals for connection whit external powered conveyor
NOTE:
Don't install internal Jumper JP8, JP10 for 12V mode.
NOTE:
Check that JP8 er JP10 are removed.
DIPB1 = OFF for normal mode
DIPB1 = ON to module current to RV6 --> 1,2,3....0 to 10A
DIPB2 e 3 = ON for 400 Step/giro
-KS1
-U10
J3
J4
J1
J2C
J2B
J2A
DIP-A
DIP-B
SETTING STANDARD
INTERNAL JUMPER CONNECTIONS

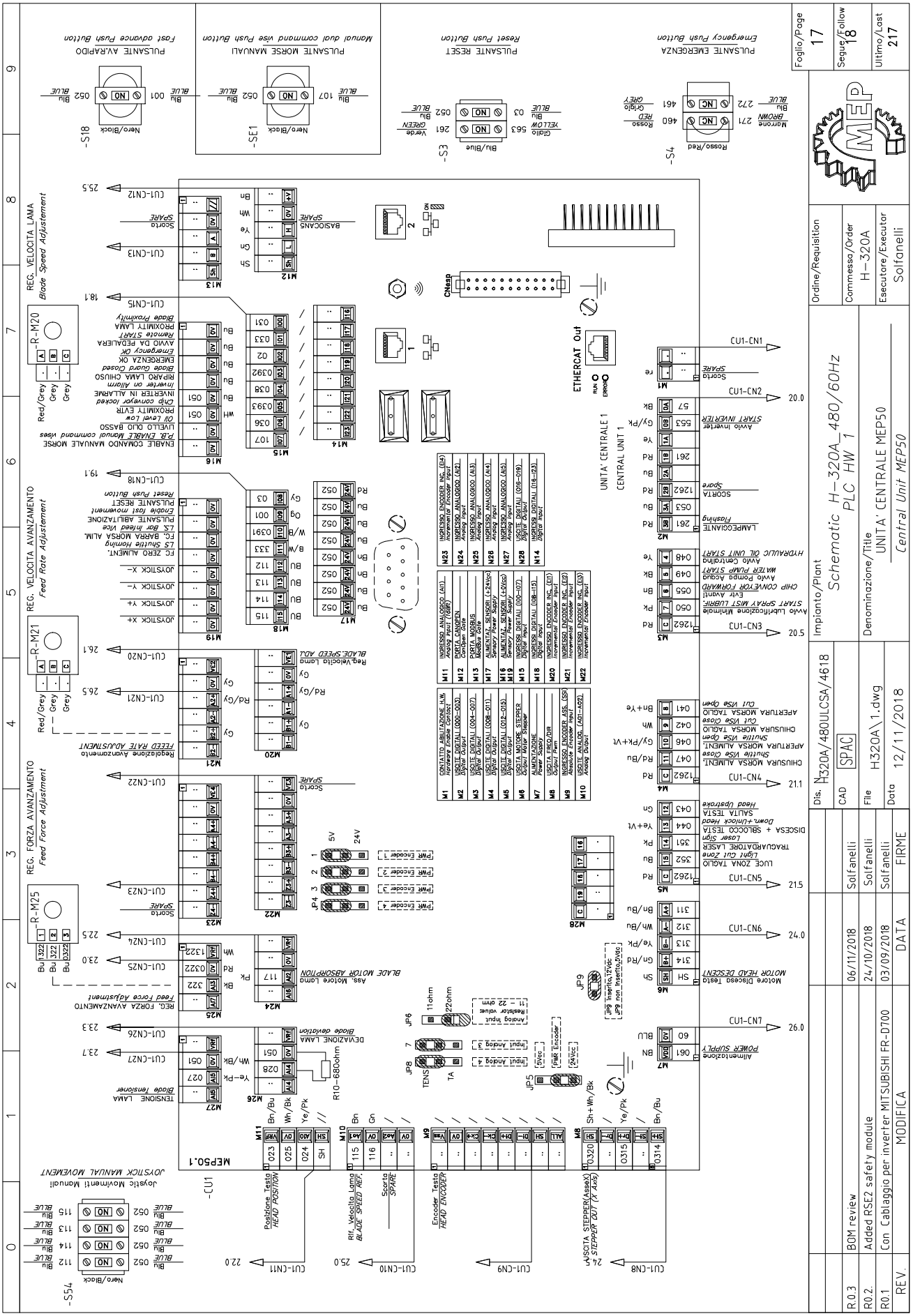
Schematic H-320A_480/60Hz
PLC HW 1
Impianto/Plant
Denominazione/Title
UNITA' CENTRALE MEP50
Central Unit MEP50
Commessa/Order
H-320A
Esecutore/Executor
Solfanelli
Ordine/Requisition
Foglio/Page 17
Segue/Follow 18
Ultimo/Last 217
Dis. H320A/480ULCSA/4618
CAD SPAC
File H320A\1.dwg
Data 12/11/2018
FIRME
DATA
MODIFICA
REV.
R0.3 BOM review 06/11/2018 Solfanelli
R0.2. Added RSE2 safety module 24/10/2018 Solfanelli
R0.1 Con Cablaggio per inverter MITSUBISHI FR-D700 03/09/2018 Solfanelli
PULSANTE EMERGENZA
Emergency Push Button
PULSANTE RESET
Reset Push Button
PULSANTE MORSE MANUALI
Manual dual command vise Push Button
PULSANTE AVANZAMENTO
Fast advance Push Button
UNITA' CENTRALE 1
CENTRAL UNIT 1
ETHERCAT Out
REG. VELOCITA LAMA
Blade Speed Adjustement
REG. VELOCITA AVANZAMENTO
Feed Rate Adjustement
REG. FORZA AVANZAMENTO
Feed Force Adjustment
JOYSTICK MANUAL MOVEMENT
Joystic Movimenti Manuali
MEP50.1
-CU1
-S54
-S18
-S1
-S3
-S4

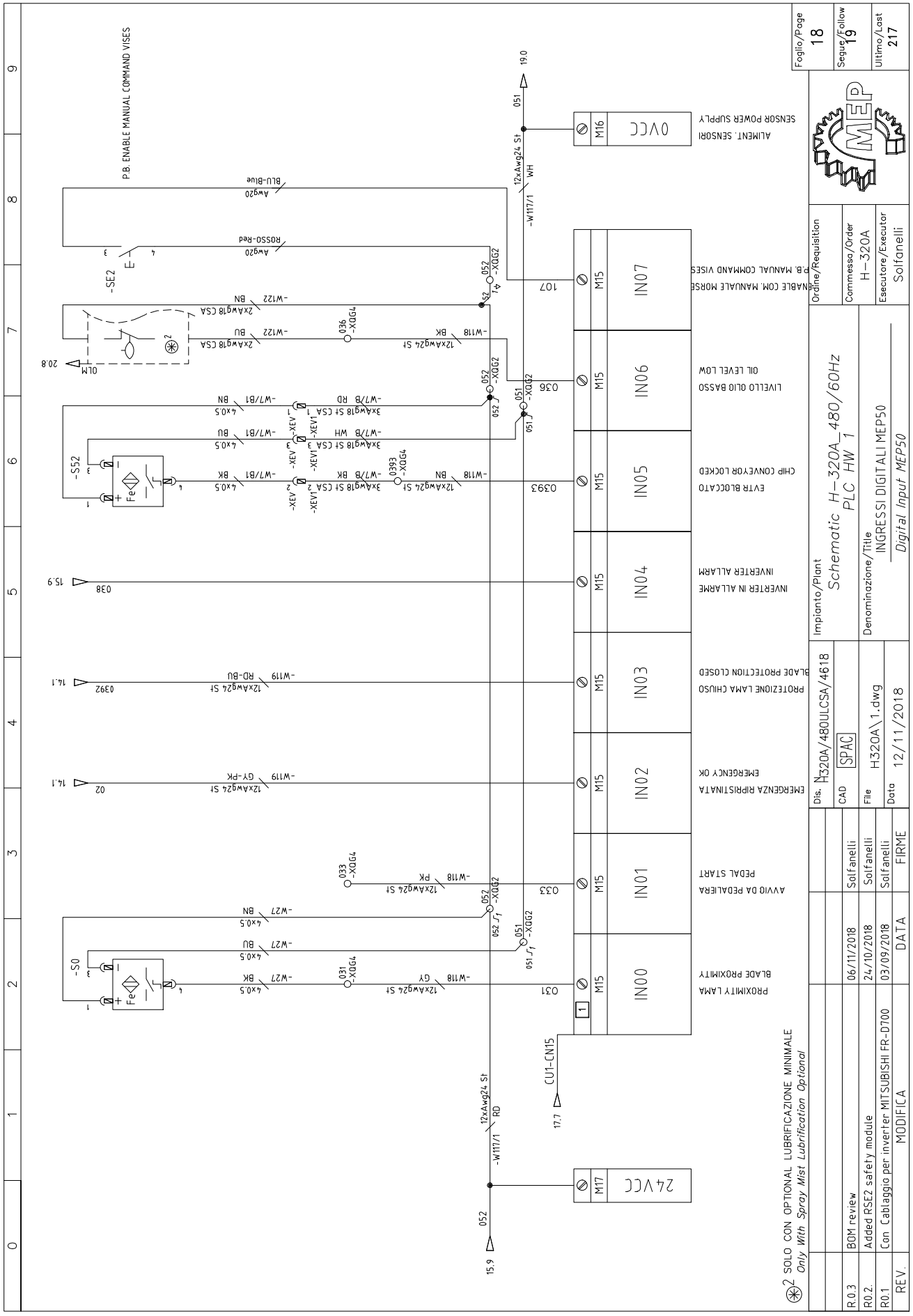
P.B. ENABLE MANUAL COMMAND VISES
ALIMENT. SENSORI
SENSOR POWER SUPPLY
0VCC
M16
24VCC
M17
IN07
IN06
IN05
IN04
IN03
IN02
IN01
IN00
M15
P.B. MANUAL COMMAND VISES
ENABLE COM. MANUALE MORSE
OIL LEVEL LOW
LIVELLO OLIO BASSO
CHIP CONVEYOR LOCKED
EVTR BLOCCATO
INVERTER ALLARME
INVERTER IN ALLARME
BLADE PROTECTION CLOSED
PROTEZIONE LAMA CHIUSO
EMERGENCY OK
EMERGENZA RIPRISTINATA
PEDAL START
AVVIO DA PEDALIERA
BLADE PROXIMITY
PROXIMITY LAMA
SOLO CON OPTIONAL LUBRIFICAZIONE MINIMALE
Only With Spray Mist Lubrification Optional
Foglio/Page 18
Segue/Follow 19
Ultimo/Last 217
Ordine/Requisition
Commessa/Order H-320A
Esecutore/Executor Solfanelli
Impianto/Plant
Schematic H-320A 480/60Hz
PLC HW 1
Denominazione/Title
INGRESSI DIGITALI MEP50
Digital Input MEP50
Dis. H320A/480ULCSA/4618
CAD SPAC
File H320A\1.dwg
Data 12/11/2018
R0.3 BOM review 06/11/2018 Solfanelli
R0.2. Added RSE2 safety module 24/10/2018 Solfanelli
R0.1 Con Cablaggio per inverter MITSUBISHI FR-D700 03/09/2018 Solfanelli
REV. MODIFICA DATA FIRME

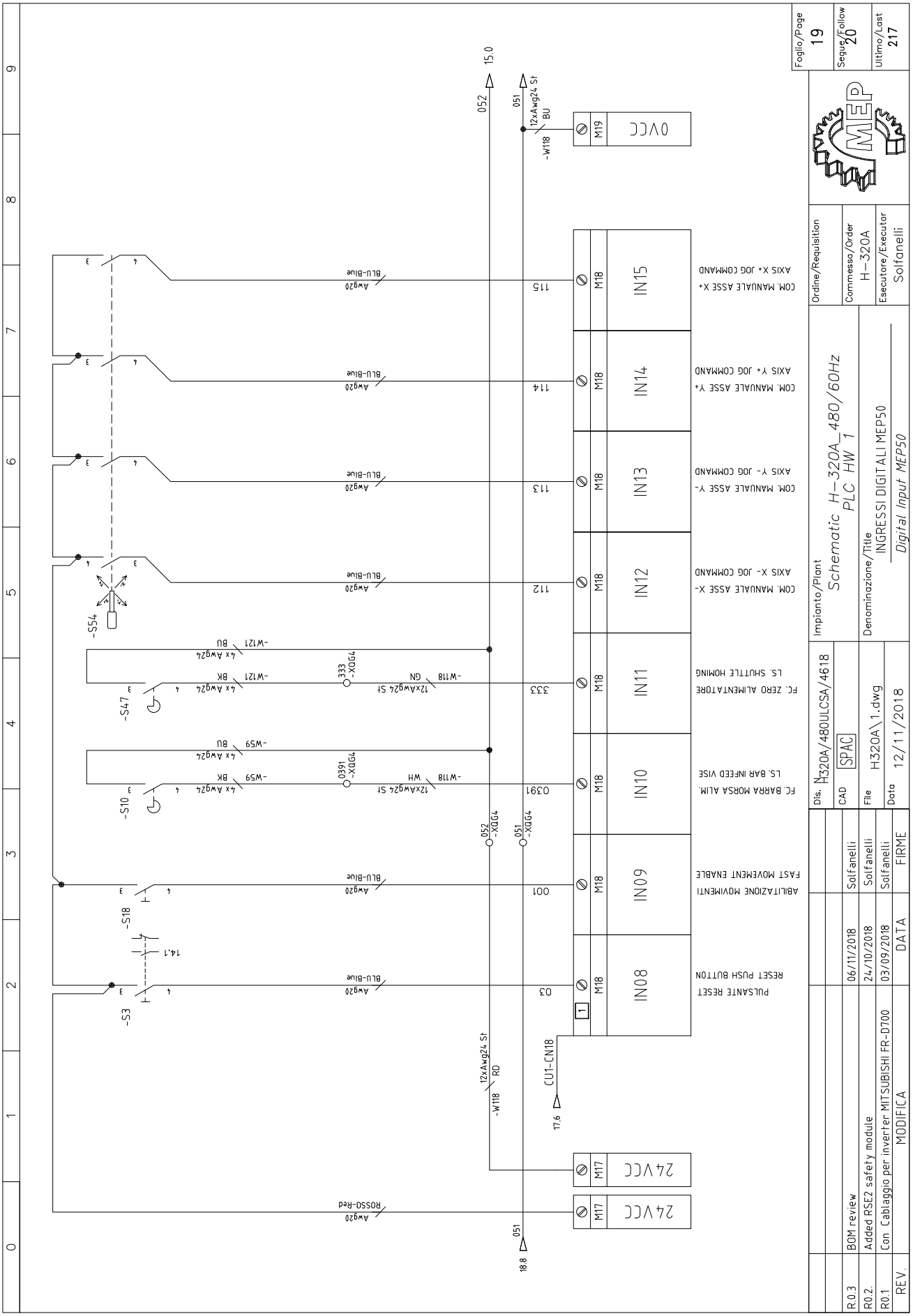
Foglio/Page 19
Segue/Follow 20
Ultimo/Last 217
Ordine/Requisition
Commessa/Order H-320A
Esecutore/Executor Solfanelli
Impianto/Plant
Schematic H-320A_480/60Hz
PLC HW 1
Denominazione/Title
INGRESSI DIGITALI MEP50
Digital Input MEP50
Dis. H320A/480ULCSA/4618
CAD SPAC
File H320A\1.dwg
Data 12/11/2018
R0.3 BOM review 06/11/2018 Solfanelli
R0.2. Added RSE2 safety module 24/10/2018 Solfanelli
R0.1 Con Cablaggio per inverter MITSUBISHI FR-D700 03/09/2018 Solfanelli
REV. MODIFICA DATA FIRME
IN08 PULSANTE RESET
RESET PUSH BUTTON
IN09 ABILITAZIONE MOVIMENTI
FAST MOVEMENT ENABLE
IN10 FC. BARRA MORSA ALIM.
LS. BAR INFEED VISE
IN11 FC. ZERO ALIMENTATORE
LS. SHUTTLE HOMING
IN12 COM. MANUALE ASSE X-
AXIS X- JOG COMMAND
IN13 COM. MANUALE ASSE Y-
AXIS Y- JOG COMMAND
IN14 COM. MANUALE ASSE Y+
AXIS Y+ JOG COMMAND
IN15 COM. MANUALE ASSE X+
AXIS X+ JOG COMMAND
0VCC
24VCC
24VCC
-S3
-S18
-S10
-S47
-S54
-W118
-W121
-W59
-XQG4
CU1-CN18
ROSSO-Red
BLU-Blue
Awg20
12xAwg24 St
4x Awg24
15.0
17.6
18.8
14.1

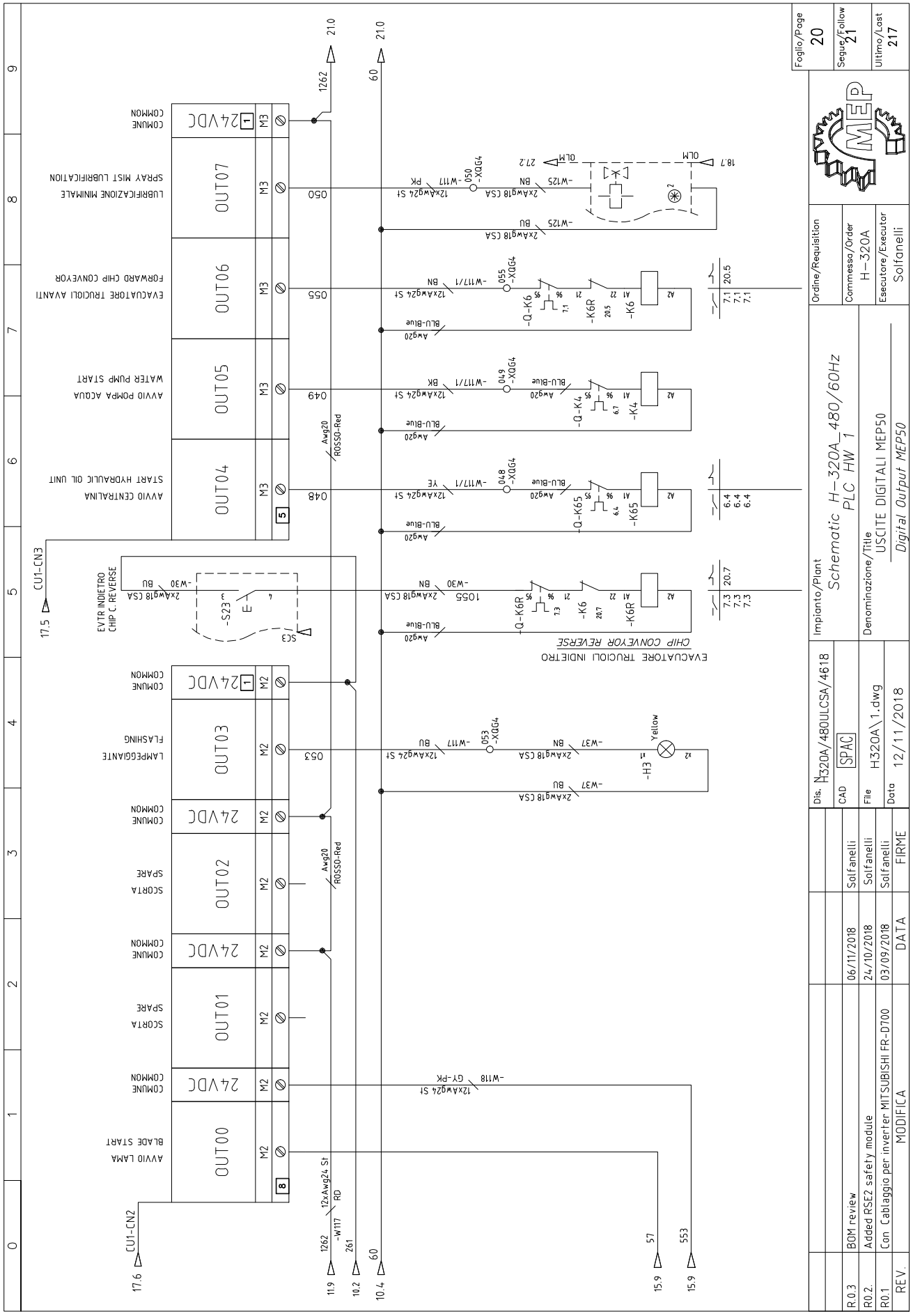
Foglio/Page 20
Segue/Follow 21
Ultimo/Last 217
Impianto/Plant
Schematic H-320A_480/60Hz
PLC HW 1
Denominazione/Title
USCITE DIGITALI MEP50
Digital Output MEP50
Ordine/Requisition
Commessa/Order H-320A
Esecutore/Executor Solfanelli
Dis. H320A/480ULCSA/4618
CAD SPAC
File H320A\1.dwg
Data 12/11/2018
R0.3 BOM review 06/11/2018 Solfanelli
R0.2. Added RSE2 safety module 24/10/2018 Solfanelli
R0.1 Con Cablaggio per inverter MITSUBISHI FR-D700 03/09/2018 Solfanelli
REV. MODIFICA DATA FIRME
OUT00 AVVIO LAMA BLADE START
OUT01 SCORTA SPARE
OUT02 SCORTA SPARE
OUT03 LAMPEGGIANTE FLASHING
OUT04 AVVIO CENTRALINA START HYDRAULIC OIL UNIT
OUT05 AVVIO POMPA ACQUA WATER PUMP START
OUT06 EVACUATORE TRUCIOLI AVANTI FORWARD CHIP CONVEYOR
OUT07 LUBRIFICAZIONE MINIMALE SPRAY MIST LUBRIFICATION
24VDC COMUNE COMMON
EVTR INDIETRO CHIP C. REVERSE
EVACUATORE TRUCIOLI INDIETRO CHIP CONVEYOR REVERSE
CU1-CN2
CU1-CN3
-H3 Yellow
-S23
-K6R
-K6
-K4
-K65
-Q-K6R
-Q-K6
-Q-K4
-Q-K65
-XQG4
-W117
-W117/1
-W125
-W30
-W37
-W118
Gr-PK
2xAwg18 CSA
12xAwg24 St
Awg20 ROSSO-Red
BLU-Blue
12xAwg24 St RD
OLM
21.0
60
1262
261
17.5
17.6
11.9
10.2
10.4
15.9
57
553

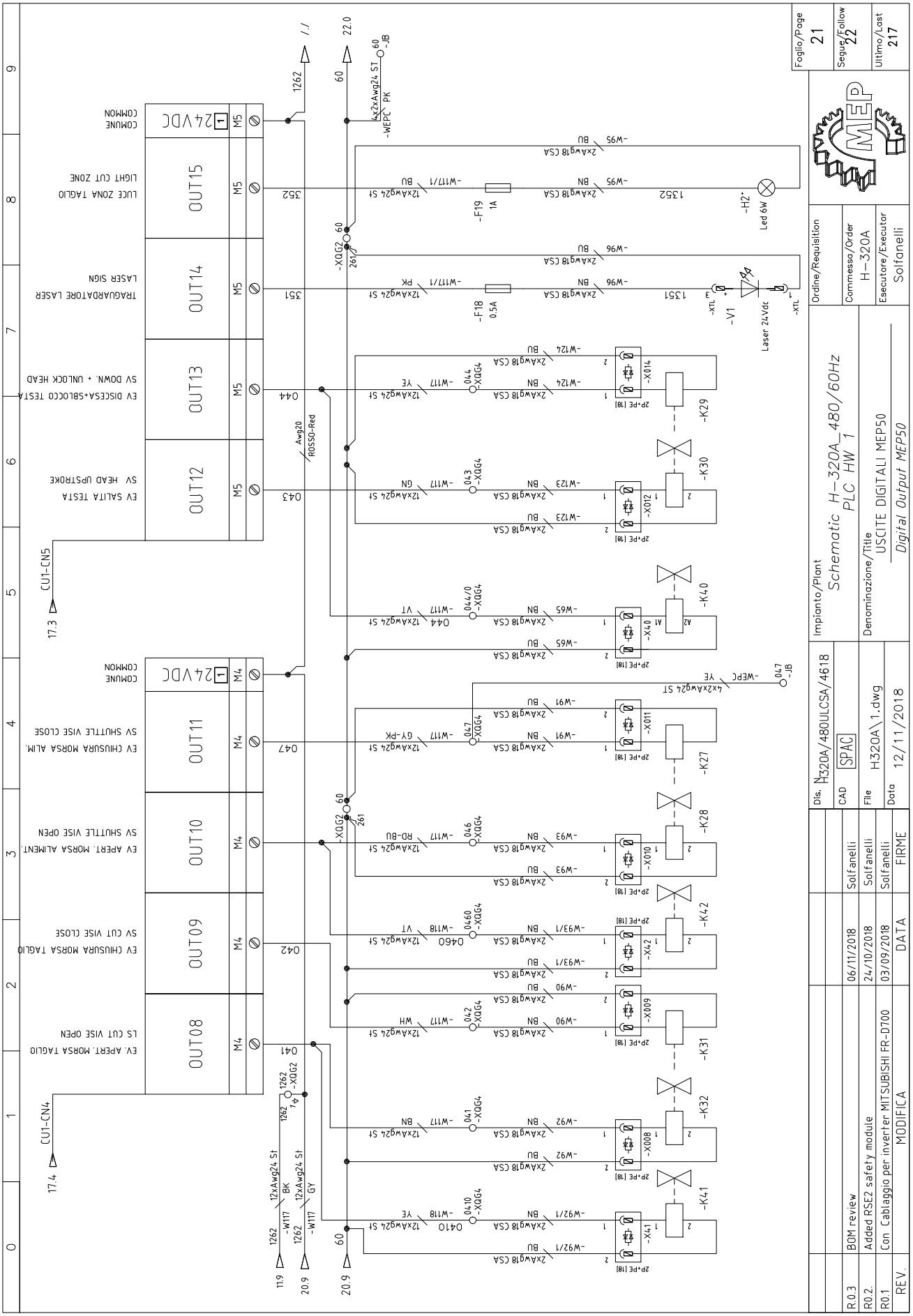
Foglio/Page 21
Segue/Follow 22
Ultimo/Last 217
Ordine/Requisition
Commessa/Order H-320A
Esecutore/Executor Solfanelli
Impianto/Plant
Schematic H-320A_480/60Hz
PLC HW 1
Denominazione/Title
USCITE DIGITALI MEP50
Digital Output MEP50
Dis. H320A/480ULCSA/4618
CAD SPAC
File H320A\1.dwg
Data 12/11/2018
R0.3 BOM review 06/11/2018 Solfanelli
R0.2. Added RSE2 safety module 24/10/2018 Solfanelli
R0.1 Con Cablaggio per inverter MITSUBISHI FR-D700 03/09/2018 Solfanelli
REV. MODIFICA DATA FIRME
OUT08
OUT09
OUT10
OUT11
OUT12
OUT13
OUT14
OUT15
24VDC
COMUNE
COMMON
EV. APERT. MORSA TAGLIO
LS CUT VISE OPEN
EV CHIUSURA MORSA TAGLIO
SV CUT VISE CLOSE
EV APERT. MORSA ALIMENT.
SV SHUTTLE VISE OPEN
EV CHIUSURA MORSA ALIM.
SV SHUTTLE VISE CLOSE
EV SALITA TESTA
SV HEAD UPSTROKE
EV DISCESA+SBLOCCO TESTA
SV DOWN. + UNLOCK HEAD
TRAGUARDATORE LASER
LASER SIGN
LUCE ZONA TAGLIO
LIGHT CUT ZONE
-K41
-K32
-K31
-K42
-K28
-K27
-K40
-K30
-K29
-K1
-K2
-K3
-K4
-K5
-K6
-K7
-K8
-K9
-K10
-K11
-K12
-K14
-F18 0.5A
-F19 1A
-V1
Laser 24Vdc
-H2
Led 6W
-XQG2
-WEPC
-JB
CU1-CN4
CU1-CN5
Avg20 ROSSO-Red

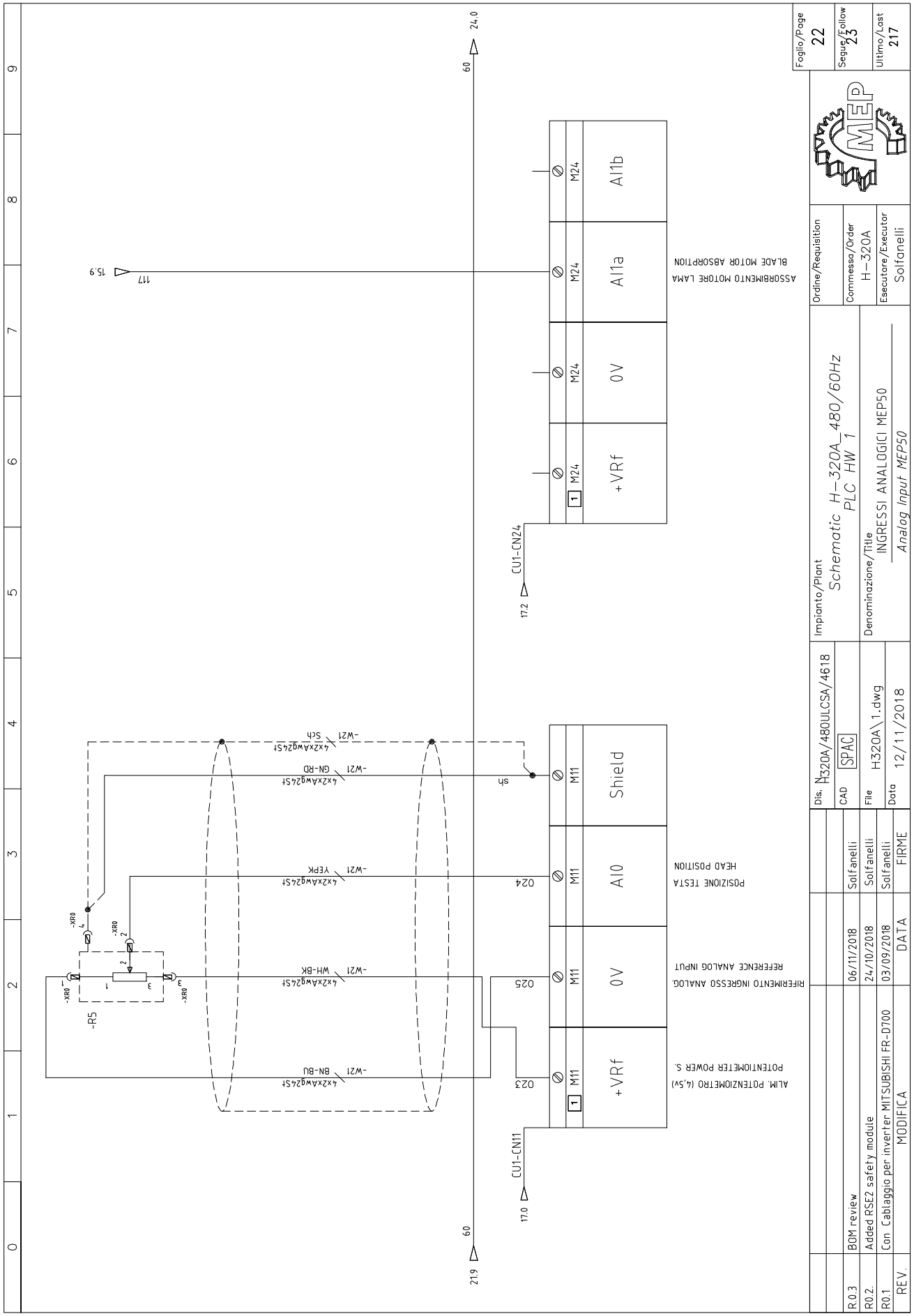
Foglio/Page 22
Segue/Follow 23
Ultimo/Last 217
Ordine/Requisition
Commessa/Order H-320A
Esecutore/Executor Solfanelli
Impianto/Plant
Schematic H-320A 480/60Hz
PLC HW 1
Denominazione/Title
INGRESSI ANALOGICI MEP50
Analog Input MEP50
Dis. H320A/480ULCSA/4618
CAD SPAC
File H320A\1.dwg
Data 12/11/2018
R0.3 BOM review 06/11/2018 Solfanelli
R0.2. Added RSE2 safety module 24/10/2018 Solfanelli
R0.1 Con Cablaggio per inverter MITSUBISHI FR-D700 03/09/2018 Solfanelli
REV. MODIFICA DATA FIRME
CU1-CN24
CU1-CN11
+VRf
0V
AI1a
AI1b
M24
M11
AI0
Shield
ASSORBIMENTO MOTORE LAMA
BLADE MOTOR ABSORPTION
POSIZIONE TESTA
HEAD POSITION
RIFERIMENTO INGRESSO ANALOG.
REFERENCE ANALOG INPUT
ALIM. POTENZIOMETRO (4,5V)
POTENTIOMETER POWER S.
-R5
-XR0
-W21
4x2xAwg24St
BN-BU
WH-BK
YEPK
GN-RD
Sch
Sh
O23
O24
O25
24.0
60
15.9
117
17.2
17.0
219

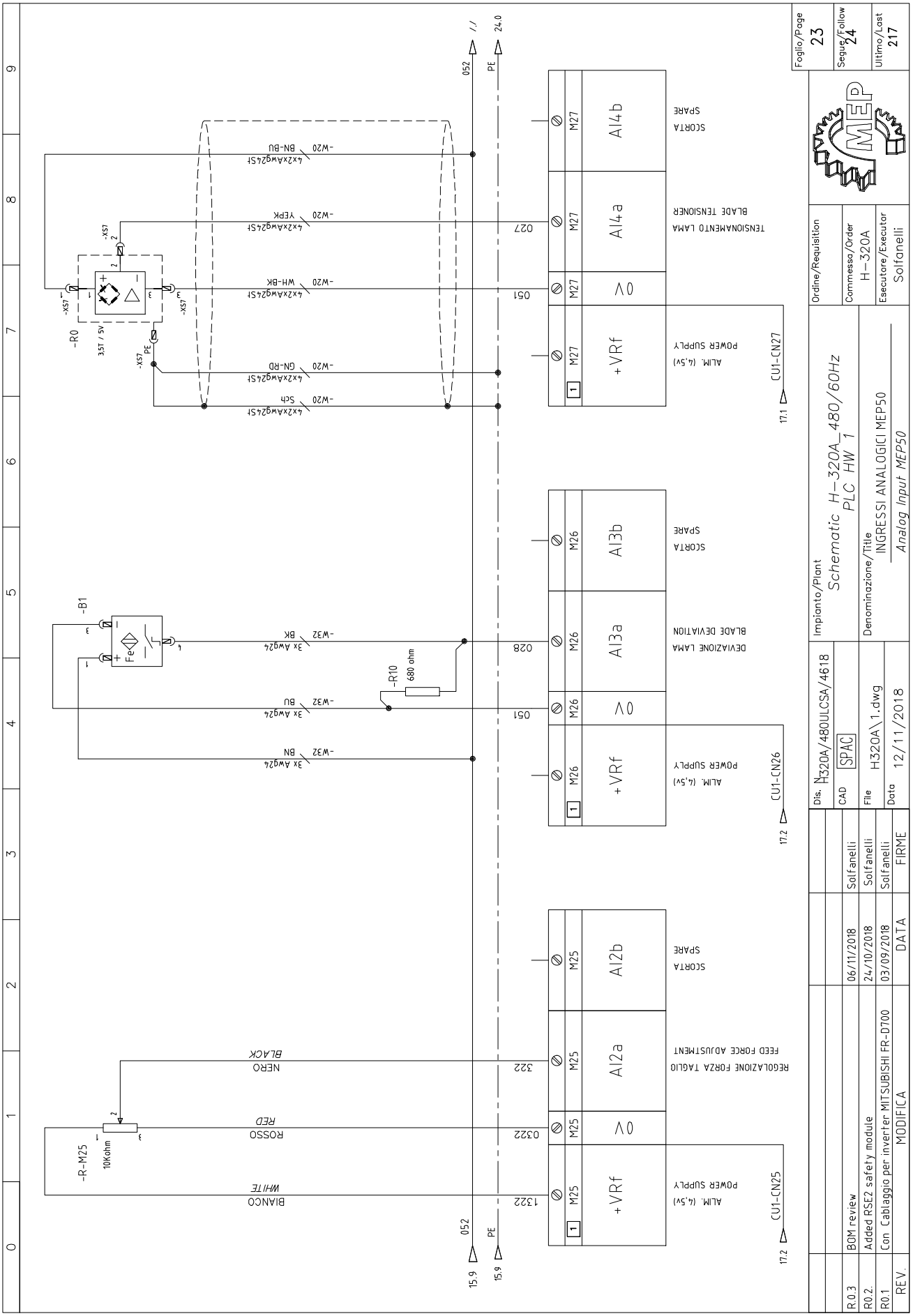
Foglio/Page 23
Segue/Follow 24
Ultimo/Last 217
Ordine/Requisition
Commessa/Order H-320A
Esecutore/Executor Solfanelli
Impianto/Plant
Schematic H-320A_480/60Hz
PLC HW 1
Denominazione/Title
INGRESSI ANALOGICI MEP50
Analog Input MEP50
Dis. H320A/480ULCSA/4618
CAD SPAC
File H320A\1.dwg
Data 12/11/2018
R0.3 BOM review 06/11/2018 Solfanelli
R0.2. Added RSE2 safety module 24/10/2018 Solfanelli
R0.1 Con Cablaggio per inverter MITSUBISHI FR-D700 03/09/2018 Solfanelli
REV. MODIFICA DATA FIRME
AI4b
AI4a
AI3b
AI3a
AI2b
AI2a
+VRf
SCORTA
SPARE
TENSIONAMENTO LAMA
BLADE TENSIONER
DEVIAZIONE LAMA
BLADE DEVIATION
REGOLAZIONE FORZA TAGLIO
FEED FORCE ADJUSTMENT
POWER SUPPLY
ALIM. (4,5V)
CU1-CN25
CU1-CN26
CU1-CN27
-R0
-B1
-R10
680 ohm
-R-M25
10Kohm
BIANCO
WHITE
ROSSO
RED
NERO
BLACK
BN-BU
YEPK
WH-BK
GN-RD
SCH
BK
BU
BN
4x2xAwg24St
3x Awg24
-W20
-W32
-XS7
3,5T / 5V
052
051
027
028
1322
0322
322
24.0
17.1
17.2
15.9

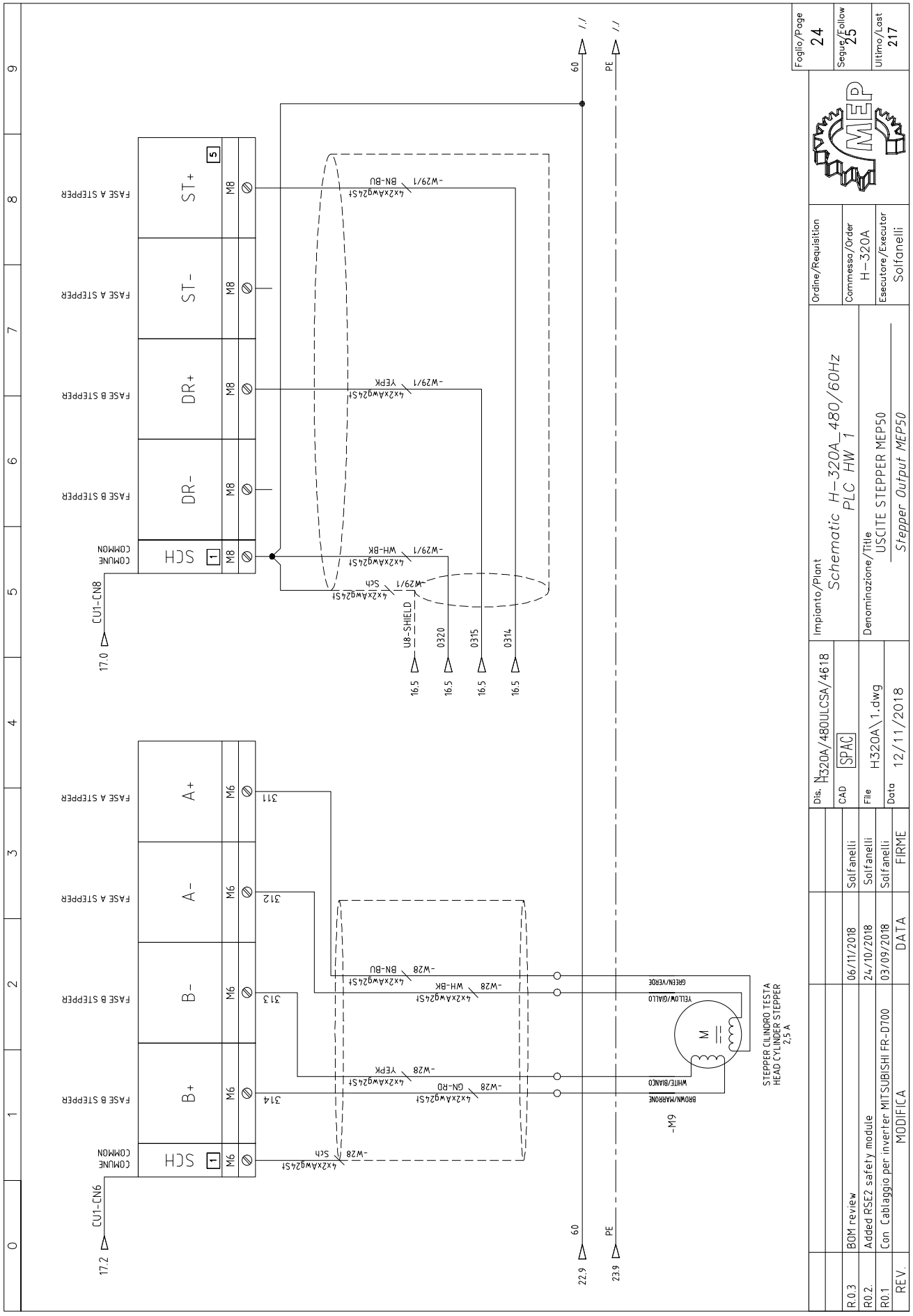
Foglio/Page 24
Segue/Follow 25
Ultimo/Last 217
Ordine/Requisition
Commessa/Order H-320A
Esecutore/Executor Solfanelli
Impianto/Plant Schematic H-320A 480/60Hz PLC HW 1
Denominazione/Title USCITE STEPPER MEP50
Stepper Output MEP50
Dis. H320A/480ULCSA/4618
CAD SPAC
File H320A\1.dwg
Data 12/11/2018
R0.3 BOM review 06/11/2018 Solfanelli
R0.2. Added RSE2 safety module 24/10/2018 Solfanelli
R0.1 Con Cablaggio per inverter MITSUBISHI FR-D700 03/09/2018 Solfanelli
REV. MODIFICA DATA FIRME
CU1-CN6
CU1-CN8
SCH
COMUNE COMMON
B+
B-
A-
A+
DR-
DR+
ST-
ST+
FASE B STEPPER
FASE A STEPPER
M6
M8
STEPPER CILINDRO TESTA
HEAD CYLINDER STEPPER
2,5 A
-M9
BROWN/MARRONE
WHITE/BIANCO
YELLOW/GIALLO
GREEN/VERDE
4x2xAwg24St
-W28
-W29/1
BN-BU
YEPK
GN-RD
WH-BK
Sch
U8-SHIELD
0314
0315
0320
311
312
313
314
17.2
17.0
16.5
22.9
23.9
60
PE

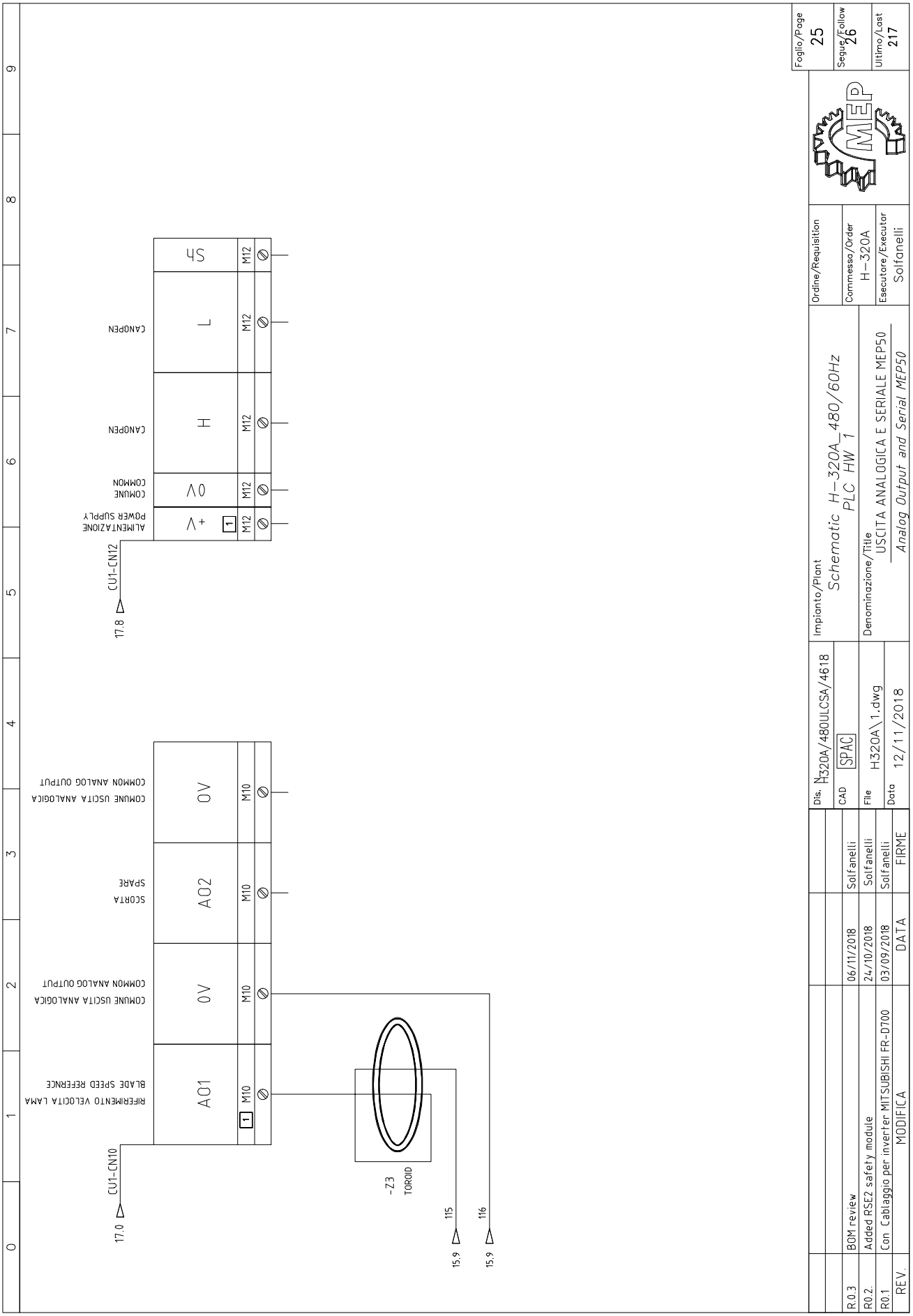
Foglio/Page 25
Segue/Follow 26
Ultimo/Last 217
Ordine/Requisition
Commessa/Order H-320A
Esecutore/Executor Solfanelli
Impianto/Plant Schematic H-320A_480/60Hz PLC HW 1
Denominazione/Title USCITA ANALOGICA E SERIALE MEP50
Analog Output and Serial MEP50
Dis. H320A/480ULCSA/4618
CAD SPAC
File H320A\1.dwg
Data 12/11/2018
R0.3 BOM review 06/11/2018 Solfanelli
R0.2. Added RSE2 safety module 24/10/2018 Solfanelli
R0.1 Con Cablaggio per inverter MITSUBISHI FR-D700 03/09/2018 Solfanelli
REV. MODIFICA DATA FIRME
CU1-CN12
17.8
ALIMENTAZIONE POWER SUPPLY
+V
0V
COMUNE COMMON
H
CANOPEN
L
CANOPEN
S
M12
CU1-CN10
17.0
RIFERIMENTO VELOCITA LAMA BLADE SPEED REFERNCE
AO1
0V
COMUNE USCITA ANALOGICA COMMON ANALOG OUTPUT
AO2
SCORTA SPARE
0V
COMUNE USCITA ANALOGICA COMMON ANALOG OUTPUT
M10
-Z3 TOROID
115
116
15.9
15.9

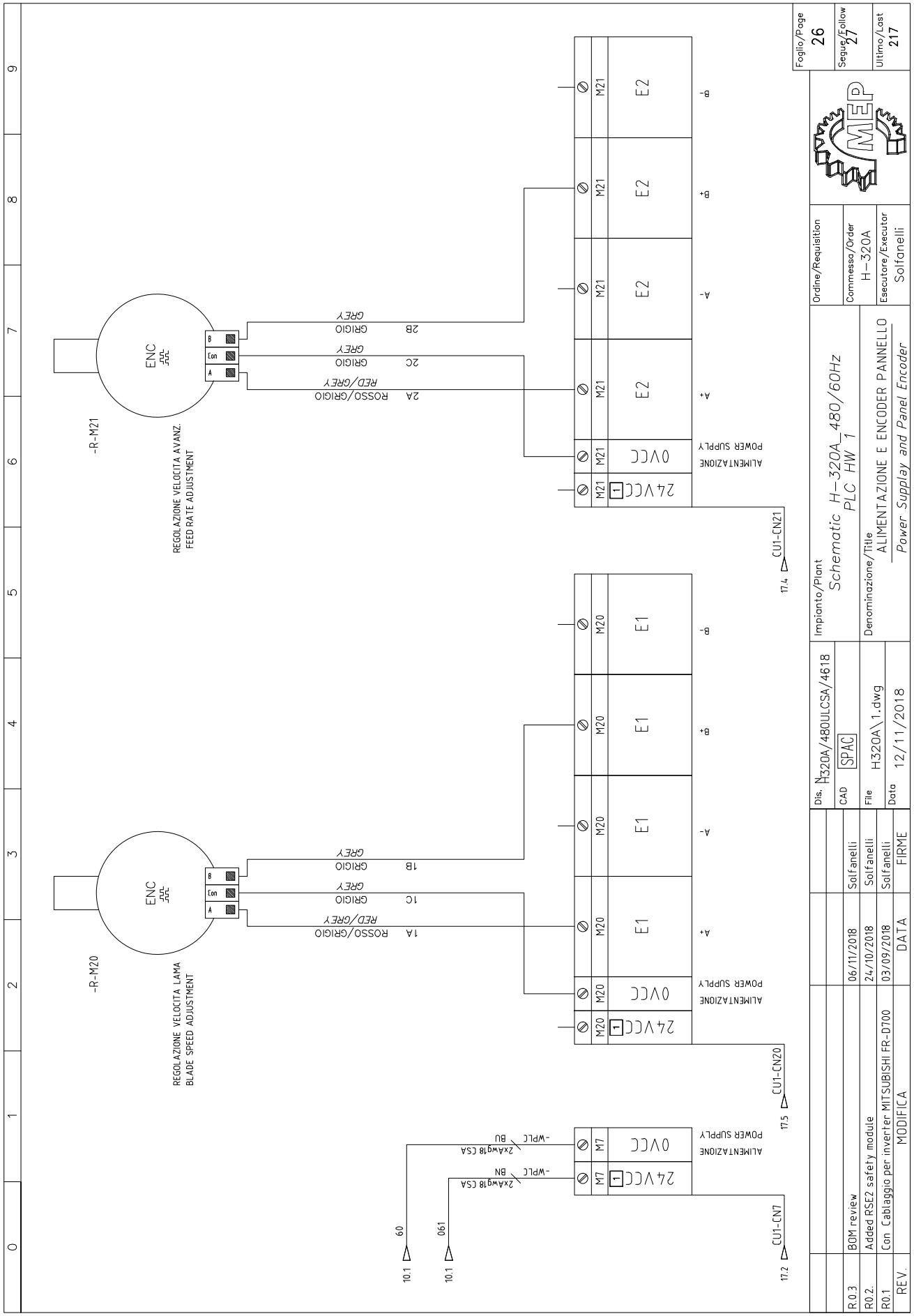
-R-M21
ENC
REGOLAZIONE VELOCITA AVANZ.
FEED RATE ADJUSTMENT
2A ROSSO/GRIGIO RED/GREY
2C GRIGIO GREY
2B GRIGIO GREY
-R-M20
ENC
REGOLAZIONE VELOCITA LAMA
BLADE SPEED ADJUSTMENT
1A ROSSO/GRIGIO RED/GREY
1C GRIGIO GREY
1B GRIGIO GREY
24VCC
0VCC
ALIMENTAZIONE
POWER SUPPLY
M21
M20
M7
E1
E2
A+
A-
B+
B-
CU1-CN21
CU1-CN20
CU1-CN7
17.4
17.5
17.2
10.1
60
061
-WPLC BU
-WPLC BN
2xAwg18 CSA
Foglio/Page 26
Segue/Follow 27
Ultimo/Last 217
Ordine/Requisition
Commessa/Order H-320A
Esecutore/Executor Solfanelli
Impianto/Plant
Schematic H-320A 480/60Hz
PLC HW 1
Denominazione/Title
ALIMENTAZIONE E ENCODER PANNELLO
Power Supplay and Panel Encoder
Dis. H320A/480ULCSA/4618
CAD SPAC
File H320A\1.dwg
Data 12/11/2018
R0.3 BOM review 06/11/2018 Solfanelli
R0.2. Added RSE2 safety module 24/10/2018 Solfanelli
R0.1 Con Cablaggio per inverter MITSUBISHI FR-D700 03/09/2018 Solfanelli
REV. MODIFICA DATA FIRME

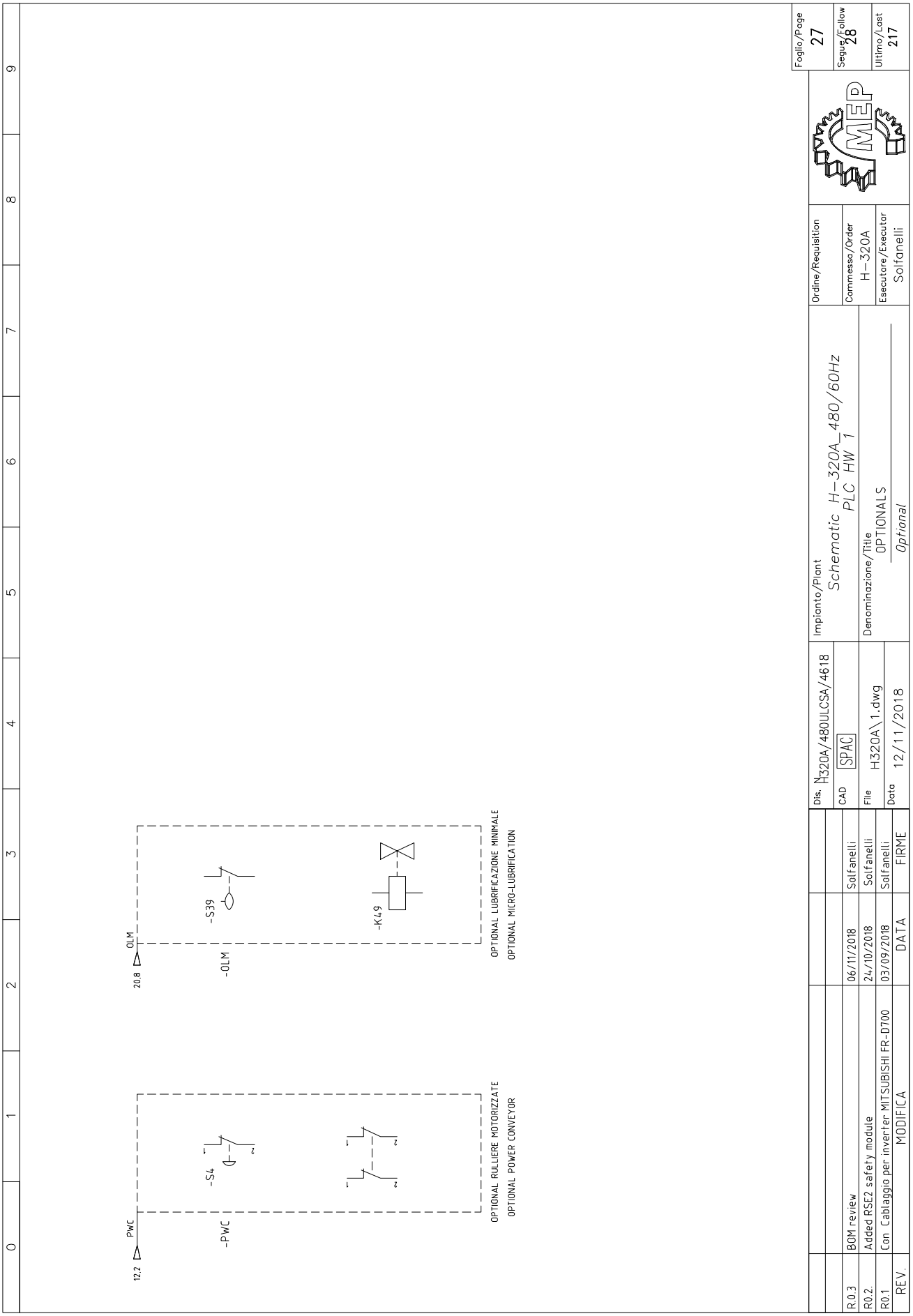
0
1
2
3
4
5
6
7
8
9
12.2
PWC
-PWC
-S4
20.8
OLM
-OLM
-S39
-K49
OPTIONAL RULLIERE MOTORIZZATE
OPTIONAL POWER CONVEYOR
OPTIONAL LUBRIFICAZIONE MINIMALE
OPTIONAL MICRO-LUBRIFICATION
R0.3 BOM review 06/11/2018 Solfanelli
R0.2. Added RSE2 safety module 24/10/2018 Solfanelli
R0.1 Con Cablaggio per inverter MITSUBISHI FR-D700 03/09/2018 Solfanelli
REV. MODIFICA DATA FIRME
Dis. H320A/480ULCSA/4618
CAD SPAC
File H320A\1.dwg
Data 12/11/2018
Impianto/Plant
Schematic H-320A_480/60Hz
PLC HW 1
Denominazione/Title
OPTIONALS
Optional
Ordine/Requisition
Commessa/Order
H-320A
Esecutore/Executor
Solfanelli
MEP
Foglio/Page
27
Segue/Follow
28
Ultimo/Last
217

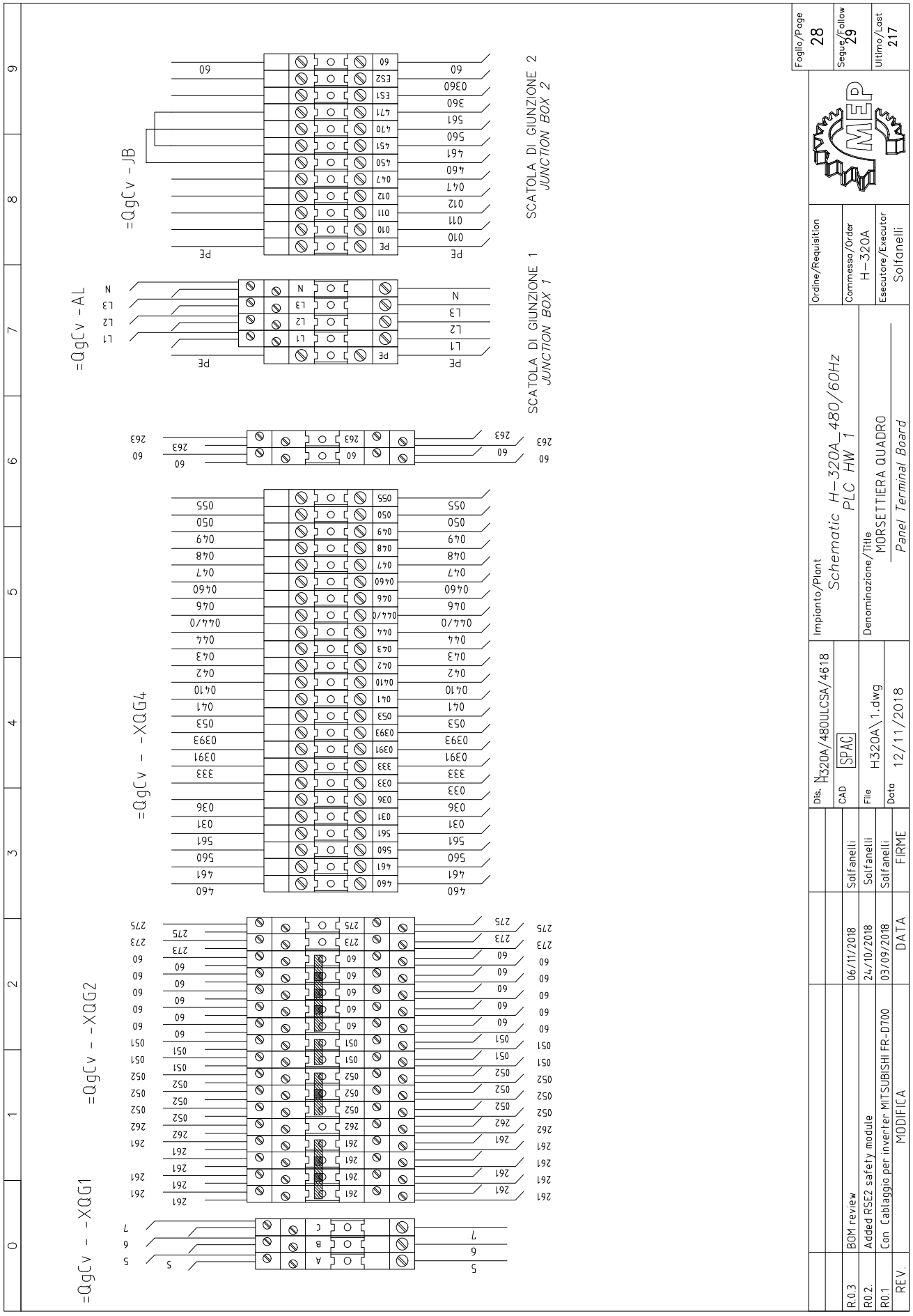
=QgCv - -XQG1
=QgCv - -XQG2
=QgCv - -XQG4
=QgCv -AL
=QgCv -JB
SCATOLA DI GIUNZIONE 1
JUNCTION BOX 1
SCATOLA DI GIUNZIONE 2
JUNCTION BOX 2
Foglio/Page 28
Segue/Follow 29
Ultimo/Last 217
Ordine/Requisition
Commessa/Order H-320A
Esecutore/Executor Solfanelli
Impianto/Plant
Schematic H-320A 480/60Hz
PLC HW 1
Denominazione/Title
MORSETTIERA QUADRO
Panel Terminal Board
Dis. H320A/480ULCSA/4618
CAD SPAC
File H320A\1.dwg
Data 12/11/2018
R0.3 BOM review 06/11/2018 Solfanelli
R0.2. Added RSE2 safety module 24/10/2018 Solfanelli
R0.1 Con Cablaggio per inverter MITSUBISHI FR-D700 03/09/2018 Solfanelli
REV. MODIFICA DATA FIRME

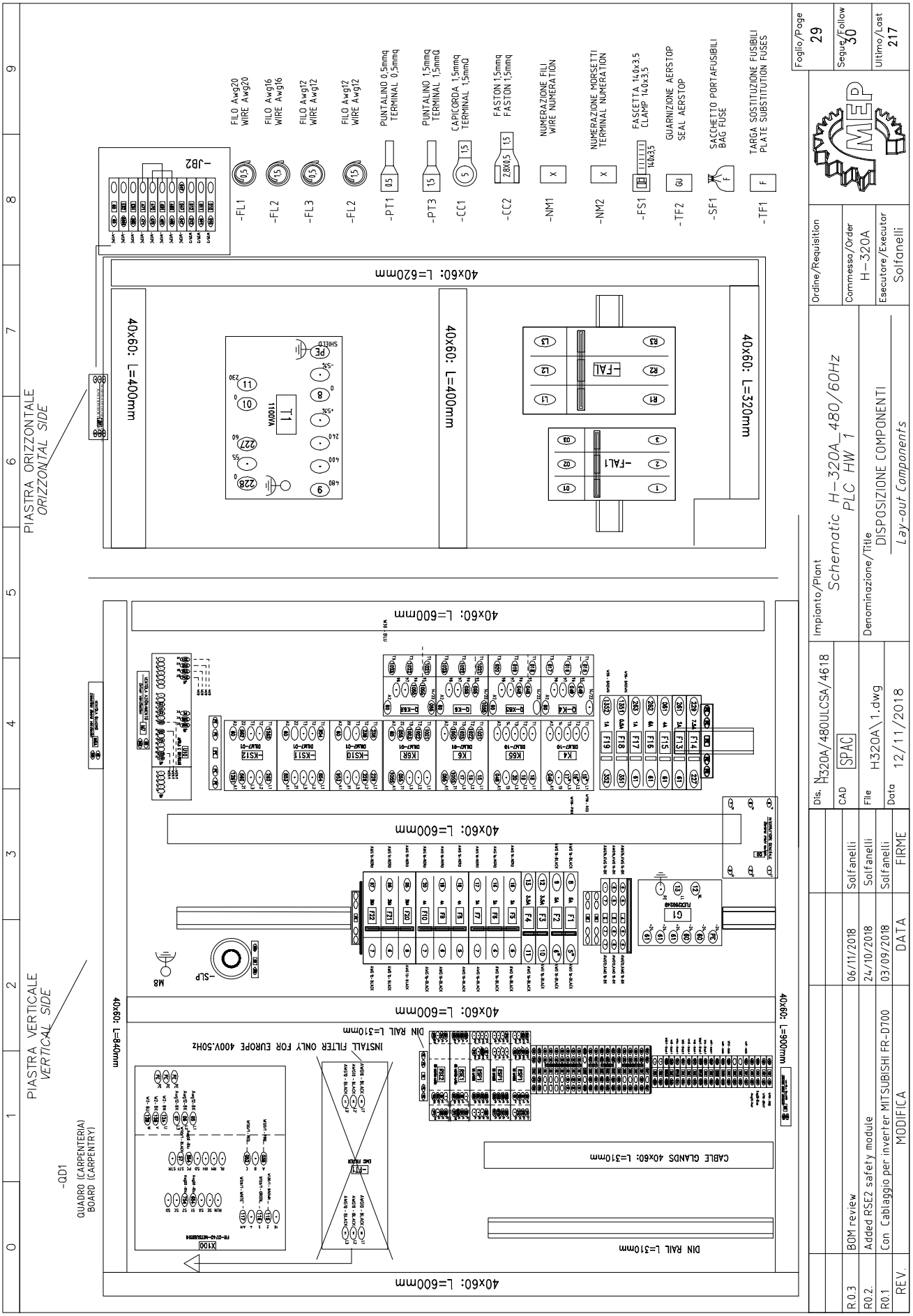
PIASTRA ORIZZONTALE
ORIZZONTAL SIDE
PIASTRA VERTICALE
VERTICAL SIDE
-QD1
QUADRO (CARPENTERIA)
BOARD (CARPENTRY)
FILO Awg20
WIRE Awg20
FILO Awg16
WIRE Awg16
FILO Awg12
WIRE Awg12
PUNTALINO 0,5mmq
TERMINAL 0,5mmq
PUNTALINO 1,5mmq
TERMINAL 1,5mmQ
CAPICORDA 1,5mmq
TERMINAL 1,5mmQ
FASTON 1,5mmq
FASTON 1,5mmq
NUMERAZIONE FILI
WIRE NUMERATION
NUMERAZIONE MORSETTI
TERMINAL NUMERATION
FASCETTA 14x3,5
CLAMP 14x3,5
GUARNIZIONE AERSTOP
SEAL AERSTOP
SACCHETTO PORTAFUSIBILI
BAG FUSE
TARGA SOSTITUZIONE FUSIBILI
PLATE SUBSTITUTION FUSES
-FL1
-FL2
-FL3
-FL2
-PT1
-PT3
-CC1
-CC2
-NM1
-NM2
-FS1
-TF2
-SF1
-TF1
-JB2
40x60: L=620mm
40x60: L=400mm
40x60: L=320mm
-FAL1
-FAL
T1
1100VA
40x60: L=600mm
40x60: L=840mm
40x60: L=900mm
-SLP
M8
G1
CABLE GLANDS 40x60: L=310mm
DIN RAIL L=310mm
INSTALL FILTER ONLY FOR EUROPE 400V.50Hz
Foglio/Page
29
Segue/Follow
30
Ultimo/Last
217
Ordine/Requisition
Commessa/Order
H-320A
Esecutore/Executor
Solfanelli
Impianto/Plant
Schematic H-320A_480/60Hz
PLC HW 1
Denominazione/Title
DISPOSIZIONE COMPONENTI
Lay-out Components
Dis. H320A/480ULCSA/4618
CAD SPAC
File H320A\1.dwg
Data 12/11/2018
R0.3 BOM review 06/11/2018 Solfanelli
R0.2. Added RSE2 safety module 24/10/2018 Solfanelli
R0.1 Con Cablaggio per inverter MITSUBISHI FR-D700 03/09/2018 Solfanelli
REV. MODIFICA DATA FIRME

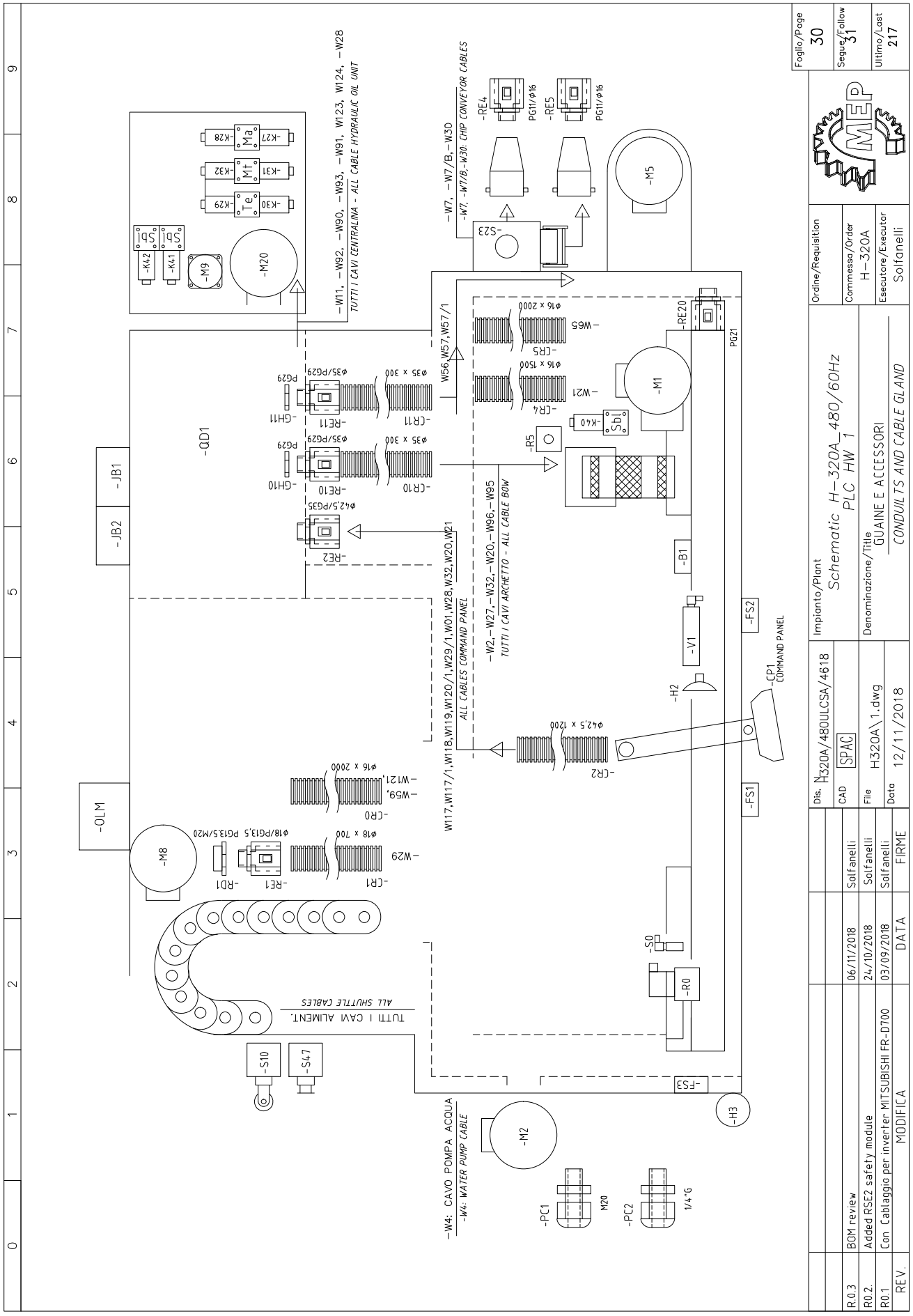
Foglio/Page 30
Segue/Follow 31
Ultimo/Last 217
Ordine/Requisition
Commessa/Order H-320A
Esecutore/Executor Solfanelli
Impianto/Plant
Schematic H-320A 480/60Hz
PLC HW 1
Denominazione/Title
GUAINE E ACCESSORI
CONDUITS AND CABLE GLAND
Dis. H320A/480ULCSA/4618
CAD SPAC
File H320A\1.dwg
Data 12/11/2018
REV. MODIFICA DATA FIRME
R0.3 BOM review 06/11/2018 Solfanelli
R0.2. Added RSE2 safety module 24/10/2018 Solfanelli
R0.1 Con Cablaggio per inverter MITSUBISHI FR-D100 03/09/2018 Solfanelli
-W11, -W92, -W90, -W93, -W91, W123, W124, -W28
TUTTI I CAVI CENTRALINA - ALL CABLE HYDRAULIC OIL UNIT
-W7, -W7/B, -W30
-W7, -W7/B, -W30: CHIP CONVEYOR CABLES
-W2, -W27, -W32, -W20, -W96, -W95
TUTTI I CAVI ARCHETTO - ALL CABLE BOW
W117, W117/1, W118, W119, W120/1, W29/1, W01, W28, W32, W20, W21
ALL CABLES COMMAND PANEL
W56, W57, W57/1
-W4: CAVO POMPA ACQUA
-W4: WATER PUMP CABLE
TUTTI I CAVI ALIMENT.
ALL SHUTTLE CABLES
-QD1
-JB1
-JB2
-OLM
-M1
-M2
-M5
-M8
-M9
-M20
-RE4
-RE5
-S23
-RE20
-CP1
COMMAND PANEL
-FS1
-FS2
-FS3
-H2
-H3
-V1
-B1
-R5
-R0
-S0
-S10
-S47
-PC1
-PC2
M20
1/4"G

CAVI ESTERNI \ EXTERNAL CABLES

QUADRO \ BOARD								DESTINAZIONE \ LOCATION			
QUADRO BOARD	FOGLIO SHEET	NR. MORSETTO TERMINAL NO.	NR. FILO CONDUCTOR NO.	ID SUL CAVO ID IN CABLE	CAVO CABLE	LUNGHEZZA LENGHT [mt]	DISTURBO NOISE LEVEL	ID SUL CAVO ID IN CABLE	NR. FILO CONDUCTOR NO.	NR. MORSETTO TERMINAL NO.	FOGLIO SHEET	QUADRO BOARD
=QgCv -AL	5/1	1 O	1	BN	-W1 E001964 Main Power supply cable	3,5 mt		BN	1		5/4	=QgCv -Q0
=QgCv -AL	5/2	2 O	2	BK				BK	2		5/4	=QgCv -Q0
=QgCv -AL	5/2	3 O	3	BU				BU	3		5/4	=QgCv -Q0
=QgCv -XQGPE	5/3	5 O	PE	GNYE				GNYE	PE	O 5_1	5/3	=QgCv -XQGPE
=QgCv -Q-K65	6/3	T1	018	BN	-W11 E001984 Hydraulic motor pump cable			BN	018	U	6/3	=BmMep -M20
=QgCv -Q-K65	6/3	T2	019	BK				BK	019	V	6/3	=BmMep -M20
=QgCv -Q-K65	6/4	T3	020	BU				BU	020	W	6/4	=BmMep -M20
=QgCv -XQGPE	6/4	5 O	PE	GNYE				GNYE	PE	PE	6/4	=BmMep -M20
=QgCv -XQG2	21/1	1262_1 O	1262	BK	-W117 E001906. Auxiliary output signals cable			BK	1262	2	11/7	=QgCv -KS12
=QgCv -XQG4	21/0	041 O	041	BN				BN	041	M4	21/1	OUT08
=QgCv -XQG2	21/1	1262_1 O	1262	GY				GY	1262	M3	20/8	24VDC
=QgCv -XQG4	20/3	053 O	053	BU				BU	053	M2	20/3	OUT03
=QgCv -XQG4	21/5	043 O	043	GN				GN	043	M5	21/5	OUT12
=QgCv -XQG4	21/6	044 O	044	YE				YE	044	M5	21/6	OUT13
=QgCv -XQG4	21/1	042 O	042	WH				WH	042	M4	21/2	OUT09
=QgCv -XQG4	21/4	044/0 O	044	VT				VT	044	M5	21/6	OUT13
=QgCv -KS12	11/7	2	1262	RD				RD	1262	M2	20/2	24VDC
=QgCv -XQG4	20/8	050 O	050	PK				PK	050	M3	20/8	OUT07
=QgCv -XQG4	21/3	047 O	047	GY-PK				GY-PK	047	M4	21/3	OUT11
=QgCv -XQG4	21/3	046 O	0460	RD-BU				RD-BU	0460	M4	21/3	OUT10
				Sch				Sch				
=QgCv -XQG4	20/6	049 O	049	BK	-W117/1 E001906. Auxiliary output signals cable			BK	049	M3	20/6	OUT05
=QgCv -XQG4	20/7	055 O	055	BN				BN	055	M3	20/7	OUT06
=QgCv -F19	21/8		352	GY				GY	352	M5	21/8	OUT15
				BU				BU				
				GN				GN				
=QgCv -XQG4	20/5	048 O	048	YE				YE	048	M3	20/5	OUT04
=QgCv -XQG4	19/3	051 O	051	WH				WH	051	O 051	18/6	=QgCv -XQG2
				VT				VT				
=QgCv -XQG2	15/7	052_2 O	052	RD				RD	052	O 052	18/2	=QgCv -XQG2
=QgCv -F18	21/7		351	PK				PK	351	M5	21/7	OUT14
				GY-PK				GY-PK				
				RD-BU				RD-BU				
				Sch				Sch				

REV.	MODIFICA	DATA	FIRME
R0.3	BOM review	06/11/2018	Solfanelli
R0.2.	Added RSE2 safety module	24/10/2018	Solfanelli
R0.1	Con Cablaggio per inverter MITSUBISHI FR-D700	03/09/2018	Solfanelli

Dis. H320A/480ULCSA/4618
CAD SPAC
File H320A\1.dwg
Data 12/11/2018

Impianto/Plant: Schematic H-320A_480/60Hz PLC HW 1
Denominazione/Title: RIASSUNTIVO CAVI / Cable summary

Ordine/Requisition
Commessa/Order: H-320A
Esecutore/Executor: Solfanelli

Foglio/Page 31
Segue/Follow 32
Ultimo/Last 217

CAVI ESTERNI \ EXTERNAL CABLES

QUADRO \ BOARD									DESTINAZIONE \ LOCATION			
QUADRO BOARD	FOGLIO SHEET	NR. MORSETTO TERMINAL NO.	NR. FILO CONDUCTOR NO.	ID SUL CAVO ID IN CABLE	CAVO CABLE	LUNGHEZZA LENGHT [mt]	DISTURBO NOISE LEVEL	ID SUL CAVO ID IN CABLE	NR. FILO CONDUCTOR NO.	NR. MORSETTO TERMINAL NO.	FOGLIO SHEET	QUADRO BOARD
=QgCv -XQG4	18/6	036	036	BK	-W118 E001906. Auxiliary input/ output signals			BK	036	M15	18/6	IN06
=QgCv -XQG4	18/5	0393	0393	BN				BN	0393	M15	18/5	IN05
=QgCv -XQG4	18/1	031	031	GY				GY	031	M15	18/1	IN00
=QgCv -XQG4	19/3	051	051	BU				BU	051	M19	19/8	0VCC
=QgCv -XQG4	19/4	333	333	GN				GN	333	M18	19/4	IN11
=QgCv -XQG4	21/0	0410	???	YE				YE	???	M4	21/1	OUT08
=QgCv -XQG4	19/3	0391	0391	WH				WH	0391	M18	19/3	IN10
=QgCv -XQG4	21/2	0460	0460	VT				VT	0460	M4	21/3	OUT10
=QgCv -XQG4	19/3	052	052	RD				RD	052	M17	19/0	24VCC
=QgCv -XQG4	18/2	033	033	PK				PK	033	M15	18/2	IN01
=QgCv -RSE1	11/4	CS ME-03VU24	553	GY-PK				GY-PK	553	M2	20/1	24VDC
				RD-BU				RD-BU				
				Sch				Sch				
				BK	-W119 E001906. Auxiliary signals cable			BK				
=QgCv -XQG2	12/0	1	271	BN				BN	271	1	12/1	=QgCv -S4
=QgCv -XQG4	12/1	461	461	GY				GY	461			
=QgCv -XQG2	12/0	1	272	BU				BU	272			
=QgCv -XQG3	11/1	262	261	GN				GN	261	3	14/2	=QgCv -S3
=QgCv -S3	14/2	4	563	YE				YE	563		14/2	
				WH				WH				
				VT				VT				
=QgCv -XQG4	12/1	460	460	RD				RD	460	2	12/1	=QgCv -S4
				PK				PK				
	14/2		02	GY-PK				GY-PK	02	M15	18/3	IN02
	14/2		0392	RD-BU				RD-BU	0392	M15	18/4	IN03
				Sch				Sch				
	15/2	2	115	BN	-W120/1 E001905. Inverter VFD auxiliary cable	5.5 mt		BN	115	M10	25/1	AO1
	15/3	STF	57	BK				BK	57	M2	20/0	OUT00
				BU				BU				
	15/2	5	116	GN				GN	116	M10	25/1	0V
=QgCv -XQG2	15/7	052_2	052	RD				RD	052	C	15/2	
				YE				YE				
	15/2	AM	117	WH				WH	117	M24	22/7	AI1a
	15/2	A	038	PK				PK	038	M15	18/5	IN04
=QgCv -XQGPE	5/3	5	PE	Sch				Sch	PE			

REV.	MODIFICA	DATA	FIRME
R.0.3	BOM review	06/11/2018	Solfanelli
R0.2.	Added RSE2 safety module	24/10/2018	Solfanelli
R0.1	Con Cablaggio per inverter MITSUBISHI FR-D700	03/09/2018	Solfanelli

Dis. N. H320A/480ULCSA/4618
CAD SPAC
File H320A\1.dwg
Data 12/11/2018

Impianto/Plant: Schematic H-320A_480/60Hz PLC HW 1
Denominazione/Title: RIASSUNTIVO CAVI
Cable Summary

Ordine/Requisition
Commessa/Order: H-320A
Esecutore/Executor: Solfanelli

MEP

Foglio/Page 32
Segue/Follow 33
Ultimo/Last 217

CAVI ESTERNI \ EXTERNAL CABLES

QUADRO \ BOARD						CAVO CABLE	LUNGHEZZA LENGHT [m]	DISTURBO NOISE LEVEL	DESTINAZIONE \ LOCATION				
QUADRO BOARD	FOGLIO SHEET	NR. MORSETTO TERMINAL NO.	NR. FILO CONDUCTOR NO.	ID SUL CAVO ID IN CABLE					ID SUL CAVO ID IN CABLE	NR. FILO CONDUCTOR NO.	NR. MORSETTO TERMINAL NO.	FOGLIO SHEET	QUADRO BOARD
=QgCv -XQG4	19/4	333 O	111	BK	-W121 022.0397				BK	111	4	19/4	=BmMep -S47
=QgCv -XQG4	19/3	052 O	052	BU					BU	052	3	19/4	=BmMep -S47
				BN					BN				
				WH					WH				
					L.SW. Zero Homing shuttle cable								
=QgCv -XQG2	18/7	52_1 O	8	BN	-W122 E001980				BN	8			
=QgCv -XQG4	18/6	036 O	106	BU					BU	106			
					Oil level Spray mist system								
=QgCv -XQG4	21/5	043 O	012	BN	-W123 E001980				BN	012	1	21/5	=QgCv -X012
=QgCv -XQG2	21/7	261 O	60	BU					BU	60	2	21/5	=QgCv -X012
					S.V. Head feed Up								
=QgCv -XQG4	21/6	044 O	013	BN	-W124 E001980				BN	013	1	21/6	=QgCv -X014
=QgCv -XQG2	21/3	261 O	60	BU					BU	60	2	21/6	=QgCv -X014
					S.V. Control Head feed down								
=QgCv -XQG4	20/8	050 O	007	BN	-W125 E001980				BN	007			
=QgCv -XQG2	10/3	60 O	60	BU					BU	60			
					S.V. spray mist lubrication								
=QgCv -X100	6/2	U	124	BN	-W2 E001983	4,5 mt			BN	124	U	6/0	=BmMep -M1
=QgCv -X100	6/2	V	126	BK					BK	126	V	6/0	=BmMep -M1
=QgCv -X100	6/2	W	128	BU					BU	128	W	6/1	=BmMep -M1
=QgCv -XQGPE	6/1	5 O	PE	GNYE					GNYE	PE	PE	6/1	=BmMep -M1
=QgCv -X100	6/2	PE	PE	Sch					Sch	PE			
					Blade motor supply cable								
=QgMep -XS7	23/6	PE	PE	GN-RD	-W20 E001905				GN-RD	PE			
=QgMep -XS7	23/7	3	051	WH-BK					WH-BK	051	M27	23/7	0V
=QgMep -XS7	23/7	2	027	YEPK					YEPK	027	M27	23/7	AI4a
=QgMep -XS7	23/6	PE	PE	Sch					Sch	PE			
=QgCv -XQG2	15/7	052_2 O	052	BN-BU					BN-BU	052	1	23/7	=QgMep -XS7
					Strain gauge sensor cable								

REV.	MODIFICA	DATA	FIRME
R.0.3	BOM review	06/11/2018	Solfanelli
R0.2.	Added RSE2 safety module	24/10/2018	Solfanelli
R0.1	Con Cablaggio per inverter MITSUBISHI FR-D700	03/09/2018	Solfanelli

Dis. N320A/480ULCSA/4618
CAD SPAC
File H320A\1.dwg
Data 12/11/2018

Impianto/Plant: Schematic H-320A_480/60Hz PLC HW 1
Denominazione/Title: RIASSUNTIVO CAVI / Cable Summary

Ordine/Requisition
Commessa/Order H-320A
Esecutore/Executor Solfanelli

Foglio/Page 33
Segue/Follow 34
Ultimo/Last 217

CAVI ESTERNI \ EXTERNAL CABLES

QUADRO \ BOARD									DESTINAZIONE \ LOCATION			
QUADRO BOARD	FOGLIO SHEET	NR. MORSETTO TERMINAL NO.	NR. FILO CONDUCTOR NO.	ID SUL CAVO ID IN CABLE	CAVO CABLE	LUNGHEZZA LENGHT [mt]	DISTURBO NOISE LEVEL	ID SUL CAVO ID IN CABLE	NR. FILO CONDUCTOR NO.	NR. MORSETTO TERMINAL NO.	FOGLIO SHEET	QUADRO BOARD
			sh	GN-RD				GN-RD	sh			
=QgMep -XR0	22/2	4	025	WH-BK				WH-BK	025	M11	22/3	Shield
=QgMep -XR0	22/2	3	024	YEPK	-W21 E001905			YEPK	024	M11	22/1	+VRf
=QgMep -XR0	22/2	2	sh	Sch	Head potentiometer device cable			Sch	sh	M11	22/2	AI0
=QgMep -XR0	22/2	4	023	BN-BU				BN-BU	023	M11	22/3	Shield
=QgMep -XR0	22/2	1								M11	22/2	0V
			052	BN				BN	052			
=BmMep -S0	18/1	1	100	BK				BK	100			
=QgCv -XQG4	18/1	031	051	BU	-W27 022.0422			BU	051	4	18/1	=BmMep -S0
=BmMep -S0	18/2	3		WH	Blade Proximity sensor cable			WH				
			314	GN-RD				GN-RD	314			
=SaCv	24/1		312	WH-BK				WH-BK	312	M6	24/1	B+
=SaCv	24/1		313	YEPK	-W28 E001905			YEPK	313	M6	24/2	A-
=SaCv	24/1		SCR	Sch	Stepper motor head control cable			Sch	SCR	M6	24/1	B-
SCH	24/0	M6	311	BN-BU				BN-BU	311			
=SaCv	24/2									M6	24/3	A+
			221	BN				BN	221			
=QgCv -U10	9/2	A1	222	BK				BK	222	YELLOW	9/2	=BmMep -M8
=QgCv -U10	9/2	A1	223	GY	-W29 E001979			GY	223	WHITE	9/2	=BmMep -M8
=QgCv -U10	9/2	B1	224	BU	Stepper X axis motor cable			BU	224	BLUE	9/4	=BmMep -M8
=QgCv -U10	9/2	B2	PE	GNYE				GNYE	PE	BROWN	9/4	=BmMep -M8
=QgCv -XQGPE	9/2	5									9/3	=BmMep -M8
				GN-RD				GN-RD				
			0320	WH-BK				WH-BK	0320			
=QgCv	16/1	20	0315	YEPK	-W29/1 E001905			YEPK	0315	M8	24/5	SCH
=QgCv	16/1	15	???	Sch	Step/dir X axis control cable			Sch	???	M8	24/6	DR+
SCH	24/5	M8	0314	BN-BU				BN-BU	0314			
=QgCv	16/1	14								M8	24/8	ST+
				GN-RD				GN-RD				
			011	WH-BK				WH-BK	011			
=QgCv -JB	16/5	011	012	YEPK	-W29/2 E001905	2,5 mt		YEPK	012	11	16/1	=QgCv
=QgCv -JB	16/5	012	13	Sch	Stepper signals interface cable			Sch	13	12	16/1	=QgCv
=QgCv -JB	16/5	PE	010	BN-BU				BN-BU	010			
=QgCv -JB	16/5	010								10	16/1	=QgCv

REV.	MODIFICA	DATA	FIRME
R.0.3	BOM review	06/11/2018	Solfanelli
R0.2.	Added RSE2 safety module	24/10/2018	Solfanelli
R0.1	Con Cablaggio per inverter MITSUBISHI FR-D700	03/09/2018	Solfanelli

Dis. N H320A/480ULCSA/4618
CAD SPAC
File H320A\1.dwg
Data 12/11/2018

Impianto/Plant: Schematic H-320A_480/60Hz PLC HW 1
Denominazione/Title: RIASSUNTIVO CAVI
Cable Summary

Ordine/Requisition
Commessa/Order: H-320A
Esecutore/Executor: Solfanelli

Foglio/Page 34
Segue/Follow 35
Ultimo/Last 217

CAVI ESTERNI \ EXTERNAL CABLES

QUADRO \ BOARD									DESTINAZIONE \ LOCATION			
QUADRO BOARD	FOGLIO SHEET	NR. MORSETTO TERMINAL NO.	NR. FILO CONDUCTOR NO.	ID SUL CAVO ID IN CABLE	CAVO CABLE	LUNGHEZZA LENGHT [mt]	DISTURBO NOISE LEVEL	ID SUL CAVO ID IN CABLE	NR. FILO CONDUCTOR NO.	NR. MORSETTO TERMINAL NO.	FOGLIO SHEET	QUADRO BOARD
=QgCv -Q-K6R	20/4	95	1055	BN	-W30 E001980			BN	1055	4	20/4	=QgMep -S23
24VDC	20/4	M2	261	BU	Chip conveyor reverse p.button cable			BU	261	3	20/4	=QgMep -S23
=QgCv -XQG2	15/7	052_2 ○	052	BN				BN	052	1	23/4	=BmMep -B1
AI3a	23/4	M26	028	BK	-W32 022.0355			BK	028	4	23/4	=BmMep -B1
0V	23/4	M26	051	BU	Blade deviation device cable			BU	051	3	23/4	=BmMep -B1
=QgCv -Q-K4	6/7	T1	015	BN				BN	015	U	6/7	=BmMep -M2
=QgCv -Q-K4	6/7	T2	016	BK	-W4 E001984			BK	016	V	6/7	=BmMep -M2
=QgCv -Q-K4	6/7	T3	017	BU	Coolant motor pump cable			BU	017	W	6/7	=BmMep -M2
=QgCv -XQGPE	6/8	5 ○	PE	GNYE				GNYE	PE	PE	6/7	=BmMep -M2
=QgCv -XQG3	11/1	262 ○	261	WH				WH	261	1	13/0	=BmMep -FS1
=QgCv -XQG3	11/1	262 ○	261	BN				BN	261	2	13/0	=BmMep -FS1
=QgCv -XQG2	10/0	60 ○	60	GN				GN	60	3	13/0	=BmMep -FS1
=BmMep -FS1	13/0	4	1610	YE				YE	1610			
=BmMep -FS1	13/1	5	23	GY	-W56 022.2056	6,0 mt		GY	23			
=QgCv -XQG3	11/1	262 ○	261	PK	Safety L.SW. Lateral guard			PK	261	6	13/1	=BmMep -FS1
=BmMep -FS1	13/1	7	1611	BU				BU	1611			
	14/3		275	RD				RD	275	8	13/1	=BmMep -FS1
=QgCv -XQG3	11/1	262 ○	261	WH				WH	261	1	13/2	=BmMep -FS2
=QgCv -XQG3	11/1	262 ○	261	BN				BN	261	2	13/2	=BmMep -FS2
=QgCv -XQG2	10/0	60 ○	60	GN				GN	60	3	13/2	=BmMep -FS2
=BmMep -FS2	13/2	4	1620	YE				YE	1620			
=BmMep -FS2	13/2	5	24	GY	-W57 022.2053	5.0 mt		GY	24			
=QgCv -XQG3	11/1	262 ○	261	PK	Safety L.SW. Right frontal guard			PK	261	6	13/2	=BmMep -FS2
=BmMep -FS2	13/3		1621	BU				BU	1621			
=QgCv -XQG2	13/3	275_1 ○	275	RD				RD	275	8	13/3	=BmMep -FS2

REV.	MODIFICA	DATA	FIRME
R.0.3	BOM review	06/11/2018	Solfanelli
R0.2.	Added RSE2 safety module	24/10/2018	Solfanelli
R0.1	Con Cablaggio per inverter MITSUBISHI FR-D700	03/09/2018	Solfanelli

Dis. N H320A/480ULCSA/4618
CAD SPAC
File H320A\1.dwg
Data 12/11/2018

Impianto/Plant: Schematic H-320A_480/60Hz PLC HW 1
Denominazione/Title: RIASSUNTIVO CAVI
Cable Summary

Ordine/Requisition
Commessa/Order: H-320A
Esecutore/Executor: Solfanelli

Foglio/Page 35
Segue/Follow 36
Ultimo/Last 217

CAVI ESTERNI \ EXTERNAL CABLES

QUADRO \ BOARD									DESTINAZIONE \ LOCATION			
QUADRO BOARD	FOGLIO SHEET	NR. MORSETTO TERMINAL NO.	NR. FILO CONDUCTOR NO.	ID SUL CAVO ID IN CABLE	CAVO CABLE	LUNGHEZZA LENGHT [mt]	DISTURBO NOISE LEVEL	ID SUL CAVO ID IN CABLE	NR. FILO CONDUCTOR NO.	NR. MORSETTO TERMINAL NO.	FOGLIO SHEET	QUADRO BOARD
=QgCv -XQG3	11/1	262	261	WH				WH	261	1	13/4	=BmMep -FS3
=QgCv -XQG3	11/1	262	261	BN				BN	261	2	13/4	=BmMep -FS3
=QgCv -XQG2	10/0	60	60	GN				GN	60	3	13/4	=BmMep -FS3
=BmMep -FS3	13/4	4	1630	YE				YE	1630			
=BmMep -FS3	13/4	5	25	GY	-W58 022.2053	5.0 mt		GY	25			
=QgCv -XQG3	11/1	262	261	PK	Safety L.SW. Left frontal guard			PK	261	6	13/4	=BmMep -FS3
=BmMep -FS3	13/4		1631	BU				BU	1631			
=QgCv -XQG2	13/5	275_2	275	RD				RD	275	8	13/4	=BmMep -FS3
=QgCv -XQG4	19/3	0391	110	BK				BK	110	4	19/3	=BmMep -S10
=QgCv -XQG4	19/3	052	052	BU	-W59 022.0398			BU	052	3	19/3	=BmMep -S10
				BN	L.SW. Bar infeed shuttle vise cable			BN				
				WH				WH				
=QgCv -XQG4	21/4	044/0	54	BN	-W65 E001980			BN	54	1	21/4	=QgCv -X40
=QgCv -XQG2	21/3	261	60	BU	S.V. Unlock Head feed down			BU	60	2	21/4	=QgCv -X40
=QgCv -XFET	7/0	1	1021	BN				BN	1021	T1	7/0	=QgCv -Q-K6
=QgCv -XFET	7/0	2	1022	BK	-W7 E001984			BK	1022	T2	7/0	=QgCv -Q-K6
=QgCv -XFET	7/1	3	1023	BU	Chip conveyor motor cable			BU	1023	T3	7/1	=QgCv -Q-K6
=QgCv -XFET	7/1	PE	PE	GNYE				GNYE	PE	5	7/1	=QgCv -XQGPE
=QgEtMep XMET	7/0	1	1024	BN				BN	1024	U	7/0	=QgEtMep -M5
=QgEtMep XMET	7/0	2	1025	BK	-W7/1 E001984			BK	1025	V	7/0	=QgEtMep -M5
=QgEtMep XMET	7/1	3	1026	BU	Chip conveyor motor2 cable			BU	1026	W	7/1	=QgEtMep -M5
=QgEtMep XMET	7/1	PE	7	GNYE				GNYE	7	PE	7/1	=QgEtMep -M5
=BmMep -XEV1	18/6	1	052	RD				RD	052			
=QgCv -XQG4	18/5	0393	868	BK	-W7/B E001981			BK	868	2	18/5	=BmMep -XEV1
=BmMep -XEV1	18/6	3	051	WH	Chip conveyor Proximity sensor			WH	051			
				Sch				Sch				

REV.	MODIFICA	DATA	FIRME
R.0.3	BOM review	06/11/2018	Solfanelli
R0.2.	Added RSE2 safety module	24/10/2018	Solfanelli
R0.1	Con Cablaggio per inverter MITSUBISHI FR-D700	03/09/2018	Solfanelli

Dis. N. H320A/480ULCSA/4618
CAD SPAC
File H320A\1.dwg
Data 12/11/2018

Impianto/Plant: Schematic H-320A_480/60Hz PLC HW 1
Denominazione/Title: RIASSUNTIVO CAVI
Cable Summary

Ordine/Requisition
Commessa/Order: H-320A
Esecutore/Executor: Solfanelli

MEP

Foglio/Page: 36
Segue/Follow: 37
Ultimo/Last: 217

CAVI ESTERNI \ EXTERNAL CABLES

QUADRO \ BOARD								DESTINAZIONE \ LOCATION			
QUADRO BOARD	FOGLIO SHEET	NR. MORSETTO TERMINAL NO.	NR. FILO CONDUCTOR NO.	ID SUL CAVO ID IN CABLE	CAVO CABLE	LUNGHEZZA LENGHT [m]	DISTURBO NOISE LEVEL	ID SUL CAVO ID IN CABLE	NR. FILO CONDUCTOR NO.	NR. MORSETTO TERMINAL NO.	FOGLIO SHEET	QUADRO BOARD
=BmMep -XEV	18/6	1	052	BN	-W7/B1 022.0424			BN	052	1	18/5	=BmMep -S52
=BmMep -XEV	18/5	2	867	BK				BK	867	4	18/5	=BmMep -S52
=BmMep -XEV	18/6	3	051	BU				BU	051	3	18/5	=BmMep -S52
				WH	Chip conveyor Proximity sensor2			WH				
=QgCv -XQG4	21/1	042	009	BN	-W90 E001980			BN	009	1	21/1	=QgCv -X009
=QgCv -XQG2	10/3	60	60	BU	S.V. Cut Vise Closing			BU	60	2	21/1	=QgCv -X009
=QgCv -XQG4	21/3	047	011	BN	-W91 E001980			BN	011	1	21/3	=QgCv -X011
=QgCv -XQG2	21/3	261	60	BU	S.V. Shuttle Vise Closing			BU	60	2	21/4	=QgCv -X011
=QgCv -XQG4	21/0	041	008	BN	-W92 E001980			BN	008	1	21/0	=QgCv -X008
=QgCv -XQG2	10/3	60	60	BU	S.V. Cut Vise Opening			BU	60	2	21/0	=QgCv -X008
=QgCv -XQG4	21/0	0410	0410	BN	-W92/1 E001980			BN	0410	1	21/0	=QgCv -X41
=QgCv -XQG2	10/3	60	60	BU	S.V. Cut Vise Opening			BU	60	2	21/-1	=QgCv -X41
=QgCv -XQG4	21/3	046	010	BN	-W93 E001980			BN	010	1	21/3	=QgCv -X010
=QgCv -XQG2	21/3	261	60	BU	S.V. Shuttle Vise Opening			BU	60	2	21/2	=QgCv -X010
=QgCv -XQG4	21/2	0460	0460	BN	-W93/1 E001980			BN	0460	1	21/2	=QgCv -X42
=QgCv -XQG2	10/3	60	60	BU	S.V. Shuttle Vise Opening			BU	60	2	21/2	=QgCv -X42
=QgCv -F19	21/8		1352	BN	-W95 E001980			BN	1352	+	21/8	=BmMep -H2
=QgCv -XQG2	21/7	261	60	BU	Light Cut zone device cable			BU	60	--	21/8	=BmMep -H2
=QgCv -XTL	21/7	3	1351	BN	-W96 E001980			BN	1351		21/7	=QgCv -F18
=QgCv -XTL	21/7	1	60	BU	Laser light device cable			BU	60	261	21/7	=QgCv -XQG2

REV.	MODIFICA	DATA	FIRME
R0.3	BOM review	06/11/2018	Solfanelli
R0.2.	Added RSE2 safety module	24/10/2018	Solfanelli
R0.1	Con Cablaggio per inverter MITSUBISHI FR-D700	03/09/2018	Solfanelli

Dis. N320A/480ULCSA/4618
CAD SPAC
File H320A\1.dwg
Data 12/11/2018

Impianto/Plant: Schematic H-320A_480/60Hz PLC HW 1
Denominazione/Title: RIASSUNTIVO CAVI / Cable Summary

Ordine/Requisition
Commessa/Order: H-320A
Esecutore/Executor: Solfanelli

Foglio/Page 37
Segue/Follow 38
Ultimo/Last 217

CAVI ESTERNI \ EXTERNAL CABLES

QUADRO \ BOARD									DESTINAZIONE \ LOCATION			
QUADRO BOARD	FOGLIO SHEET	NR. MORSETTO TERMINAL NO.	NR. FILO CONDUCTOR NO.	ID SUL CAVO ID IN CABLE	CAVO CABLE	LUNGHEZZA LENGHT [mt]	DISTURBO NOISE LEVEL	ID SUL CAVO ID IN CABLE	NR. FILO CONDUCTOR NO.	NR. MORSETTO TERMINAL NO.	FOGLIO SHEET	QUADRO BOARD
=QgCv -JB	11/8	ES1	0360	BN	-WEPC E001905. Power conveyor interface cable	3,0 mt		BN	0360	CS ME-03VU24	11/5	=QgCv -RSE1
=QgCv -JB	12/1	470	470	BK				BK	470	560	12/1	=QgCv -XQG4
=QgCv -JB	11/8	ES2	360	BU				BU	360	CS ME-03VU24	11/5	=QgCv -RSE1
=QgCv -JB	12/1	451	451	GN				GN	451			
=QgCv -JB	12/1	450	450	RD				RD	450	460	12/1	=QgCv -XQG4
=QgCv -JB	21/4	047	471	YE				YE	471	047	21/3	=QgCv -XQG4
=QgCv -JB	12/1	471	471	WH				WH	471	561	12/1	=QgCv -XQG4
=QgCv -JB	21/9	60	60	PK				PK	60	261	21/7	=QgCv -XQG2
				Sch				Sch				
=QgCv -F15	8/5		061	BN	-WPLC E001980 PLC power supply cable			BN	061	M7	26/0	24VCC
=QgCv -XQG2	10/0	60	60	BU				BU	60	M7	26/0	0VCC
=QgCv -XQG3	11/1	262	261	WH	-W58/2 022.2056 Safety L.SW Tunnel frontal guard	7,0 mt		WH	261	1	13/6	=BmMep -FS5
=QgCv -XQG3	11/1	262	261	BN				BN	261	2	13/6	=BmMep -FS5
=QgCv -XQG2	10/0	60	60	GN				GN	60	3	13/6	=BmMep -FS5
=BmMep -FS5	13/6	4	1650	YE				YE	1650			
=BmMep -FS5	13/6	5	26	GY				GY	26			
=QgCv -XQG3	11/1	262	261	PK				PK	261	6	13/6	=BmMep -FS5
=BmMep -FS5	13/7		1651	BU				BU	1651			
=QgCv -XQG2	13/7	275_3	275	RD				RD	275	8	13/7	=BmMep -FS5
=QgCv -XQG4	20/3	053	001	BN	-W37 E001980 Flashing lamp cable	4,0 mt		BN	001	x1	20/3	=BmMep -H3
=QgCv -XQG2	10/3	60	60	BU				BU	60	x2	20/3	=BmMep -H3

REV.	MODIFICA	DATA	FIRME
R.0.3	BOM review	06/11/2018	Solfanelli
R0.2.	Added RSE2 safety module	24/10/2018	Solfanelli
R0.1	Con Cablaggio per inverter MITSUBISHI FR-D700	03/09/2018	Solfanelli

Dis. N. H320A/480ULCSA/4618
CAD SPAC
File H320A\1.dwg
Data 12/11/2018

Impianto/Plant: Schematic H-320A_480/60Hz PLC HW 1
Denominazione/Title: RIASSUNTIVO CAVI
Cable Summary

Ordine/Requisition
Commessa/Order: H-320A
Esecutore/Executor: Solfanelli

Foglio/Page 38
Segue/Follow 39
Ultimo/Last 217

0	1	2	3	4	5	6	7	8	9
Nome/Item	MEP CODE	Descrizione/Description			Descrizione EN		Codice Interno	Fg/Sh	Q.ta/Q.ty
-FAL		Fus. tripolare sezionabile non sotto carico						5	1
-FAL1	E002239	Portafusibile 3 x (10.3 x 38) 690V 32 A			Fuse holding terminal 3 x (10.3 x 38) 690V 32 A		E002239	5	1
	E004678	Fusibile ritardato 10.3 x 38 - 25 A UL/CSA			Fuse time delay 10.3 x 38 - 25A UL/CSA		054.4678		3
-S4	E000911	Portacontatti per pulsantiera			Carrier for push button		E000911	27	1
	E000937	Blocchetto NA			Normally open contact		E000937		1
	E001245	Fungo Emergenza			Emergency push button		E001245		1
	E000936	contatto pulsantiera NC			Normally open contact		E000936	12	3
	E000911	Portacontatti per pulsantiera			Carrier for push button		E000911		1
	E001245	Fungo Emergenza			Emergency push button		E001245		1
-B1	E000015	Sensore induttivo 0-16mA/ 1-2.5mm, con connettore M8			Inductive sensor 0-16mA/ 1-2.5mm, with M8 connector.		E000015	23	1
-CR0	022.2601	Guaina POLIFLEX Ø16			Poliflex Covering Ø16		NW 12-1200127	30	1
-CR1	022.2602	Guaina POLIFLEX Ø18			Poliflex Covering Ø18		NW 14-1200143	30	1
-CR2	022.0197	Guaina POLIFLEX Ø35			Poliflex Covering Ø35		NW 29-3800296	30	1
-CR4	022.2601	Guaina POLIFLEX Ø16			Poliflex Covering Ø16		NW 12-1200127	30	1
-CR5	022.2601	Guaina POLIFLEX Ø16			Poliflex Covering Ø16		NW 12-1200127	30	1
-FS1	022.4008	Sensore di sicurezza magnetico con RFID			D ST DD420MK-D1T		ST DD420MK-D1TPIZZATO	13	1
	019.5353	Fascetta in plastica 140x3,5			Plastic clamp 140x3,5		32031 Legrand	29	1
-FS2	022.4008	Sensore di sicurezza magnetico con RFID			D ST DD420MK-D1T		ST DD420MK-D1TPIZZATO	13	1
-FS3	022.4008	Sensore di sicurezza magnetico con RFID			D ST DD420MK-D1T		ST DD420MK-D1TPIZZATO	13	1
-FS5	022.4008	Sensore di sicurezza magnetico con RFID			D ST DD420MK-D1T		ST DD420MK-D1TPIZZATO	13	1
-H2	E000010	Lampada zona di taglio 24Vdc			Led lamp for work zone 24Vdc		E000010	21	1
-H3	E000012	Lampeggiante + sirena 24Vac/dc for H11A			Flashing plus siren 24Vac/dc for H11A		E000012	20	1
-K27	E001002	Elettrovalvola 4/3 centri chiusi CETOP3 24Vdc			Hydraulic solenoid valve 4/3 close center CETOP3 24Vdc		E001002	21	1
-K29	E001002	Elettrovalvola 4/3 centri chiusi CETOP3 24Vdc			Hydraulic solenoid valve 4/3 close center CETOP3 24Vdc		E001002	21	1
-K31	E001002	Elettrovalvola 4/3 centri chiusi CETOP3 24Vdc			Hydraulic solenoid valve 4/3 close center CETOP3 24Vdc		E001002	21	1
-K41	V.d.Id.	Vedi distinta idraulica			See hydraulic BOM		V.d.Id.	21	1
-K42	V.d.Id.	Vedi distinta idraulica			See hydraulic BOM		V.d.Id.	21	1
-M1	P00002-480	Motore 4,0KW, 277/480V, 12/6,97A			Motor 4,0KW, 277/480V, 12/6,97A		P00002-480	6	1
-M2	P00003-480	Elettropompa acqua 250W, V=2800rpm, 480V 60Hz			Electropump 250W, V=2800rpm, 480V 60Hz		P00003-480	6	1
-M20	P000004-480	Motore centralina idraulica 1.3KW, 240V/480V.60Hz, 5.0/2.5A			Motor oil unit 1.3KW, 240V/480V.60Hz, 5.0/2.5A		P000004-480	6	1
-M8	P000001	Motore stepper 21Nm 13A, 1.8°, FL110STH150-1304A-H-1			Stepper Motor 21Nm 13A, 1.8°, FL110STH150-1304A-H-1		019.3408	9	1
-M9	P000007	Motore stepper 1.9Nm, 2.8A, 1.8°			Stepper motor 1.9Nm, 2.8A, 1.8°		019.3555	24	1
-PC1	022.0227	Pressacavo M20			Cable Gland M20		M20	30	4
-PC2	022.0232	Pressacavo metallico			Metal Cable Gland		1/4"G	30	1
-R5	E000003	Potenziometro lineare corsa 500mm			Linear potentiometer sensor 500mm.		E000003	22	1
-RD1	022.0349	Riduzione			Joint Reduction		M/F M20/PG13,5	30	1
-RE1	022.0211	Raccordo rapido dritto			Rapid straight joint SEM PG13,5/Ø19		SEM PG13,5/Ø19	30	1
-RE2	022.0209	Raccordo rapido dritto PG29/Ø35			Rapid straight Joint PG29/Ø35		SEM PG29/Ø35	30	1
-RE20	022.0209	Raccordo rapido dritto PG29/Ø35			Rapid straight Joint PG29/Ø35		SEM PG29/Ø35	30	1
-S0	E000013	Sensore di prossimità PNP (lungo) con connettore M12			Proximity sensor PNP (long) with M12 connector.		E000013	18	1
-S10	E000004	Finecorsa a rotella, contatti 1N0 + 1NC e connettore M12			Limit switch with roll 1NO+1NC and M12 connector.		E000004	19	1
-S47	E000004	Finecorsa a rotella, contatti 1N0 + 1NC e connettore M12			Limit switch with roll 1NO+1NC and M12 connector.		E000004	19	1
-S52	E000013	Sensore di prossimità PNP (lungo) con connettore M12			Proximity sensor PNP (long) with M12 connector.		E000013	18	1
-TAL		Trasformatore di potenza trifase stella-stella						5	1
-V1	E000011	Traguardatore laser a barra in Vdc			Laser Line sign sensor Vdc.		E000011	21	1

REV.	MODIFICA	DATA	FIRME
R.0.3	BOM review	06/11/2018	Solfanelli
R0.2.	Added RSE2 safety module	24/10/2018	Solfanelli
R0.1	Con Cablaggio per inverter MITSUBISHI FR-D700	03/09/2018	Solfanelli

Dis. N. H320A/480ULCSA/4618
CAD SPAC
File H320A\1.dwg
Data 12/11/2018

Impianto/Plant
Schematic H-320A_480/60Hz
PLC HW 1

Denominazione/Title
DISTINTA MATERIALI
Material List

Ordine/Requisition
Commessa/Order H-320A
Esecutore/Executor Solfanelli

Foglio/Page 39
Segue/Follow 40
Ultimo/Last 217

0	1	2	3	4	5	6	7	8	9
Nome/Item	MEP CODE	Descrizione/Description			Descrizione EN		Codice Interno	Fg/Sh	Q.ta/Q.ty
-XEV	022.0281 + 022.0268	Connettore fisso ILME (CK03I + CKF04) 5 poli per evacuatore trucioli			Fixed connector ILME (CK03I + CKF04) 5 poles		CK03I + CKF04		1
-XEV1	022.0282 + 022.0267	Connettore volante ILME (CK03VS pioli + CKM04) 5 poli per evacuatore trucioli			Mobile connector ILME (CK03VS + CKM04) 5 poles		CK03VS pioli + CKM04		1
	E001230	Azionamento per motori (60 VAC.10A) con modbus			Driver for step motor (60 VAC.10A) + modbus		022.1330	16	1
-AL	022.2231	Morsetto 4(6)mmq per 2 fili a molla - PHOENIX			Terminal 4(6)mmq for 2 wires - PHOENIX		ST4- 3031364		8
	2.5 mm	Morsetto da 2.5 mm non abbinato a costruttore							1
-CC1	022.0304	Terminale a occhiello (Rosso)			Wire Terminal Connection Red		Ø5 da 1,5mmq A5/P-B15/P	29	1
-CC2	022.0307	Terminale a faston (Rosso)			Wire Terminal Connection Red		2.8x0.5 da 1,5mmq A00T/P	29	1
-CP1	031.2080	Consolle di programmazione MEP50 H14A			Programming consolled MEP50 H14A			30	1
	016.0765	Quadro pannello comandi per H14A			Command panel board for H14A		016.0765		1
-CR10	022.0197	Guaina POLIFLEX Ø35			Poliflex Covering Ø35		NW 29-3800296	30	1
-CR11	022.0197	Guaina POLIFLEX Ø35			Poliflex Covering Ø35		NW 29-3800296	30	1
-CU1	E004091	Cavo USB per quadro comandi con connettore			Cable USB for command panel with connector		E004091	17	1
	022.2834	Controllore Mep50C__V1.0__senza display			Controller Mep50C__V1.0__without display				1
	031.2081	Consolle di programmazione MEP50 H11A, H230A,H14A.1			Programming consolled MEP50 H11A, H230A,H14A.1				1
-F1 -F2	E002240	Portafusibile 2 x (10.3 x 38) 690V 50A			Fuse holding terminal 2 x (10.3 x 38) 690V 50A		E002240	8	1
	E004538	Fusibile ritardato 10.3 x 38 - 5A UL/CSA			Fuse time delay 10.3 x 38 - 5A UL/CSA		054.4538		2
-F13	E000139	Morsetto portafusibile 1 x (10.3 x 38) 690V 32A			Fuse holding terminal 1 x (10.3 x 38) 690V 32 A		E000139	8	1
	E004675	Fusibile ritardato 10.3 x 38 - 2 A UL/CSA			Fuse time delay 10.3 x 38 - 2 UL/CSA		E004675		1
-F14	E004664	Fusibile ritardato 10.3 x 38 - 7.5 UL/CSA			Fuse time delay 10.3 x 38 - 7.5 UL/CSA		054.4664	8	1
	E000139	Morsetto portafusibile 1 x (10.3 x 38) 690V 32A			Fuse holding terminal 1 x (10.3 x 38) 690V 32 A		E000139		1
-F15	E000139	Morsetto portafusibile 1 x (10.3 x 38) 690V 32A			Fuse holding terminal 1 x (10.3 x 38) 690V 32 A		E000139	8	1
	E004662	Fusibile ritardato 10.3 x 38 - 4 A UL/CSA			Fuse time delay 10.3 x 38 - 4 A UL/CSA		054.4662		1
-F16	E000139	Morsetto portafusibile 1 x (10.3 x 38) 690V 32A			Fuse holding terminal 1 x (10.3 x 38) 690V 32 A		E000139	8	1
	054.4585	Fusibile Ritardato 10.3x38 - 6A UL/CSA			Fuse Time delay 10.3x38 - 6A UL/CSA		6A 600V ATDR6		1
-F17	E000139	Morsetto portafusibile 1 x (10.3 x 38) 690V 32A			Fuse holding terminal 1 x (10.3 x 38) 690V 32 A		E000139	8	1
	E004673	Fusibile ritardato 10.3 x 38 - 1A UL/CSA			Fuse time delay 10.3 x 38 - 1A UL/CSA		054.4673		1
-F18	E000139	Morsetto portafusibile 1 x (10.3 x 38) 690V 32A			Fuse holding terminal 1 x (10.3 x 38) 690V 32 A		E000139	21	1
	E004659	Fusibile ritardato 10.3 x 38 - 0.5 A UL/CSA			Fuse time delay 10.3 x 38 - 0.5 A UL/CSA		054.4659		1
-F19	E000139	Morsetto portafusibile 1 x (10.3 x 38) 690V 32A			Fuse holding terminal 1 x (10.3 x 38) 690V 32 A		E000139	21	1
	E004673	Fusibile ritardato 10.3 x 38 - 1A UL/CSA			Fuse time delay 10.3 x 38 - 1A UL/CSA		054.4673		1
-F22 -F21 -F20	E002239	Portafusibile 3 x (10.3 x 38) 690V 32A			Fuse holding terminal 3 x (10.3 x 38) 690V 32 A		E002239	6	1
	E004678	Fusibile ritardato 10.3 x 38 - 25 A UL/CSA			Fuse time delay 10.3 x 38 - 25A UL/CSA		054.4678		3
-F3 -F4	E004676	Fusibile ritardato 10.3 x 38 - 3.5 UL/CSA			Fuse time delay 10.3 x 38 - 3.5 UL/CSA		054.467	8	2
	E002240	Portafusibile 2 x (10.3 x 38) 690V 50A			Fuse holding terminal 2 x (10.3 x 38) 690V 50A		E002240		1
-F5 -F6 -F7	E002239	Morsetto portafusibile 3 x (10.3 x 38) 690V 32 A			Fuse holding terminal 3 x (10.3 x 38) 690V 32 A		E002239	6	1
	E004675	Fusibile ritardato 10.3 x 38 - 2 A UL/CSA			Fuse time delay 10.3 x 38 - 2 UL/CSA		E004675		3
-F8 -F9 -F10	E002239	Morsetto portafusibile 3 x (10.3 x 38) 690V 32 A			Fuse holding terminal 3 x (10.3 x 38) 690V 32 A		E002239	6	1
	E004662	Fusibile ritardato 10.3 x 38 - 4 A UL/CSA			Fuse time delay 10.3 x 38 - 4 A UL/CSA		054.4662		3
-FL1	022.0133	Filo unipolare AWG20 CSA (0.5mmq)			Single wire AWG20 CSA (0.5mmq)			29	1
-FL2	022.0134	Filo unipolare AWG16 CSA (1.5mmq)			Single wire AWG16 CSA (1.5mmq)			29	1
	022.1996	Cavo 1AWG12 GN/YE			Cable 1AWG12 GN/YE				1
-FL3	022.1995	Cavo 1AWG12 NERO			Cable 1AWG12 NERO			29	1
-G1	E000016	Interruttore alimentazione Vi 240-400-500 VAC Vu 24Vcc 14A			Switching power supply Vi 240-400-500 VAC Vu 24Vcc 14A		022.0908	8	1
-GH10	022.0247	Dado poliammide PG29			Nut Poliammide PG29		PG29	30	1
-GH11	022.0247	Dado poliammide PG29			Nut Poliammide PG29		PG29	30	1

REV.	MODIFICA	DATA	FIRME
R.0.3	BOM review	06/11/2018	Solfanelli
R0.2.	Added RSE2 safety module	24/10/2018	Solfanelli
R0.1	Con Cablaggio per inverter MITSUBISHI FR-D700	03/09/2018	Solfanelli

Dis. N. H320A/480ULCSA/4618
CAD SPAC
File H320A\1.dwg
Data 12/11/2018

Impianto/Plant
Schematic H-320A_480/60Hz
PLC HW 1

Denominazione/Title
DISTINTA MATERIALI
Material List

Ordine/Requisition
Commessa/Order H-320A
Esecutore/Executor Solfanelli

MEP

Foglio/Page 40
Segue/Follow 41
Ultimo/Last 217

0	1	2	3	4	5	6	7	8	9
Nome/Item	MEP CODE	Descrizione/Description			Descrizione EN		Codice Interno	Fg/Sh	Q.ta/Q.ty
-JB	022.2243	Morsetto 2,5(4)mmq per 2 fili a molla - PHOENIX			Terminal 2,5(4)mmq for 2 wires - PHOENIX		ST2,5- 3031212		4
	022.2256	Morsetto da 2.5 mm singolo per 2 fili a molla			Single pole spring terminal 2,5mmq		56.703.0055.0		8
-K4	E003012	Contattore 3 KW NC (24 V Dc)			Contactor 3 KW NO (24 V Dc)		E003012	20	1
-K6	E003011	Contattore 3 KW NC (24 V Dc)			Contactor 3 KW NC (24 V Dc)		E003011	20	1
-K65	E003012	Contattore 3 KW NC (24 V Dc)			Contactor 3 KW NO (24 V Dc)		E003012	20	1
-K6R	E003011	Contattore 3 KW NC (24 V Dc)			Contactor 3 KW NC (24 V Dc)		E003011	20	1
	E003924	Kit ponti potenza per teleinvertitore			Kit for contactor reversing		E003924		1
-KS10	E003011	Contattore 3 KW NC (24 V Dc)			Contactor 3 KW NC (24 V Dc)		E003011	11	1
-KS11	E003011	Contattore 3 KW NC (24 V Dc)			Contactor 3 KW NC (24 V Dc)		E003011	11	1
-KS12	E003011	Contattore 3 KW NC (24 V Dc)			Contactor 3 KW NC (24 V Dc)		E003011	11	1
-M6	019.5220	Ventola raffreddamento 120x120 24Vdc			Fan cooling 120x120 24Vdc		V108MBW24DC AlfaPlastic	10	1
	019.5117	Griglia per ventola 120x120			Cover for fan cooler 120x120		ALFA GM120		1
	E005220	Copri ventola di raffreddamento 120 x 120			Cover for fan cooler 120 x 120		E005220		1
-M7	019.5220	Ventola raffreddamento 120x120 24Vdc			Fan cooling 120x120 24Vdc		V108MBW24DC AlfaPlastic	10	1
	019.5117	Griglia per ventola 120x120			Cover for fan cooler 120x120		ALFA GM120		1
	E005220	Copri ventola di raffreddamento 120 x 120			Cover for fan cooler 120 x 120		E005220		1
-NM1	022.0290	Etichetta segnafilo			Cable maker and wire			29	1
-NM2	022.0290	Etichetta segnafilo			Cable maker and wire			29	1
-PT1	022.0311	Terminale a puntale da (Bianco)			Wire Terminal Connection White		0,5mmq DZ5CE005	29	1
-PT3	022.0312	Terminale a puntale da (Nero)			Wire Terminal Connection Black		1,5mmq DZ5CE015	29	1
-Q-K4	E000610	Rele termico 0.7 - 1.1 A			Thermal overload 0.7 - 1.1 A		E000610	6	1
-Q-K6	E000610	Rele termico 0.7 - 1.1 A			Thermal overload 0.7 - 1.1 A		E000610	7	1
-Q-K65	E002541	Rele termico 2.5-4.1 A			Thermal overload 2.5-4.1 A		E002541	6	1
-Q-K6R	E000610	Rele termico 0.7 - 1.1 A			Thermal overload 0.7 - 1.1 A		E000610	7	1
-Q0	022.3065	Interruttore Magnetotermico scatolato 15-20A, 25KA					NZMB1- A20-NA; EATON	5	1
	022.1032	Comando bloccaporta NZM1-XHB-DAR-NA			Rotary handle door lock PNZM1-XHB-DAR-NA		NZM1-XHB-DAR-NA cod: 125959		1
-QD1								29	1
-R-M20	E000235	anello di tenuta			Ring 'Ni - 18 - 25 - 4,5		E000235	26	1
	E003749	Manopola in antracite per pannello con Icona Hydmech			Anthracite Knob with Hydmech Icon		010.3749		1
	E001322	Pannello encoder MEP 50			Panel encoder MEP 50		022.1322		1
-R-M21	E001322	Pannello encoder MEP 50			Panel encoder MEP 50		022.1322	26	1
	E000235	anello di tenuta			Ring 'Ni - 18 - 25 - 4,5		E000235		1
	E003749	Manopola in antracite per pannello con Icona Hydmech			Anthracite Knob with Hydmech Icon		010.3749		1
-R-M25	E003753	Manopola alluminio argento per Icona Hydmech			Silver Knob with Hydmech Icon		010.3753	23	1
	E000235	anello di tenuta			Ring 'Ni - 18 - 25 - 4,5		E000235		1
	E001816	Potenziometro 10K, turno singlo			Potentiometer 10K single turm		E001816		1
-R0	E000005	Tensionatore elettronico 3,5 T (cella di carico)			Electronic tensioner 3,5T (strain gauge)		E000005	23	1
-R10	E001000	Resistore 1W 680ohm			Resistor 1W 680ohm		E001000	23	1
-RE10	022.0209	Raccordo rapido dritto PG29/Ø35			Rapid straight Joint PG29/Ø35		SEM PG29/Ø35	30	1
-RE11	022.0209	Raccordo rapido dritto PG29/Ø35			Rapid straight Joint PG29/Ø35		SEM PG29/Ø35	30	1
-RSE1	022.3290	Modulo espansione 3NO+1NC Ple			Expansion module 3NO +1NC		CS ME03VU24 - PIZZATO	11	1
-RSE2	022.3290	Modulo espansione 3NO+1NC Ple			Expansion module 3NO +1NC		CS ME03VU24 - PIZZATO	14	1
-S18	E001405	Pulsante nero			Black push button		E001405	19	1
	E000937	Blocchetto NA			Normally open contact		E000937		1
	E000911	Portacontatti per pulsantiera			Carrier for push button		E000911		1

REV.	MODIFICA	DATA	FIRME
R.0.3	BOM review	06/11/2018	Solfanelli
R0.2.	Added RSE2 safety module	24/10/2018	Solfanelli
R0.1	Con Cablaggio per inverter MITSUBISHI FR-D700	03/09/2018	Solfanelli

Dis. N. H320A/480ULCSA/4618
CAD SPAC
File H320A\1.dwg
Data 12/11/2018

Impianto/Plant
Schematic H-320A_480/60Hz
PLC HW 1

Denominazione/Title
DISTINTA MATERIALI
Material List

Ordine/Requisition
Commessa/Order H-320A
Esecutore/Executor Solfanelli

Foglio/Page 41
Segue/Follow 42
Ultimo/Last 217

0	1	2	3	4	5	6	7	8	9
Nome/Item	MEP CODE	Descrizione/Description			Descrizione EN		Codice Interno	Fg/Sh	Q.ta/Q.ty
-S3	E001408	Pulsante Blu			Blue push button		E001408	19	1
	E000937	Blocchetto NA			Normally open contact		E000937		4
	E000911	Portacontatti per pulsantiera			Carrier for push button		E000911		1
-S54	E000932	contatto pulsantiera NA			Normally open contact		E000932	19	4
	E003920	Joystick 4 posizioni instabile con sblocco			Joystick 4 positions unstable withunlocking		E003920		1
-SE2	E000932	contatto pulsantiera NA			Normally open contact		E000932	18	1
	E000911	Portacontatti per pulsantiera			Carrier for push button		E000911		1
	E001405	Pulsante nero			Black push button		E001405		1
-SF1	047.0182	Sacchetto portafusibili			Printed envelopes			29	1
-SLP		Commutatore NO a ritorno automatico						14	1
-T1		Trasformatore di potenza a due avvolgimenti con schermo						8	1
-TF1	031.2622	Targa sostituzione fusibili			Replace fuse adhesive sign			29	1
-TF2	025.0604	Guarnizione aerstop			Control panel gasket			29	1
-U10	E001230	Azionamento per motori (60 VAC.10A) con modbus			Driver for step motor (60 VAC.10A) + modbus		022.1330	9	1
-X008	E000429	Connettore elettrovalvola DC			Connector for Solenoid valva DC		E000429	21	1
-X009	E000429	Connettore elettrovalvola DC			Connector for Solenoid valva DC		E000429	21	1
-X010	E000429	Connettore elettrovalvola DC			Connector for Solenoid valva DC		E000429	21	1
-X011	E000429	Connettore elettrovalvola DC			Connector for Solenoid valva DC		E000429	21	1
-X012	E000429	Connettore elettrovalvola DC			Connector for Solenoid valva DC		E000429	21	1
-X014	E000429	Connettore elettrovalvola DC			Connector for Solenoid valva DC		E000429	21	1
-X100	022.0764	Inverter 380-480V 7,5KW FR-D740-160SC			Inverter 380-480V 7,5KW FR-D740-160SC		FR-D740-160SC MITSUBISHI	6	1
-X40	E000429	Connettore elettrovalvola DC			Connector for Solenoid valva DC		E000429	21	1
-X41	E000429	Connettore elettrovalvola DC			Connector for Solenoid valva DC		E000429	21	1
-X42	E000429	Connettore elettrovalvola DC			Connector for Solenoid valva DC		E000429	21	1
-XFET	022.0281 + 022.0262	Connettore fisso ILME (CK03I + CKF03)			Fixed connector ILME (CK03I + CKF03)		CK03I + CKF03		1
-XQG1	022.2258	Morsetto da 2.5 mm singolo per 4 fili a molla			Quadruple pole spring terminal 2,5mmq		56.703.5155.0		3
-XQG2	022.2219	Morsetto 2.5(4)mmq per 4 fili a molla - PHOENIX			Terminal 2.5(4)mmq for 4 wires - PHOENIX		D-STTB-2.5_3031270		4
	022.2245	Morsetto 2,5(4)mmq per 4 fili a molla - PHOENIX			Terminal 2,5(4)mmq for 4 wires - PHOENIX		ST2,5- QUATTRO_3031306		4
	022.2258	Morsetto da 2.5 mm singolo per 4 fili a molla			Quadruple pole spring terminal 2,5mmq		56.703.5155.0		8
-XQG3	022.2245	Morsetto 2,5(4)mmq per 4 fili a molla - PHOENIX			Terminal 2,5(4)mmq for 4 wires - PHOENIX		ST2,5- QUATTRO_3031306		3
-XQG4	022.2243	Morsetto 2,5(4)mmq per 2 fili a molla - PHOENIX			Terminal 2,5(4)mmq for 2 wires - PHOENIX		ST2,5- 3031212		4
	022.2256	Morsetto da 2.5 mm singolo per 2 fili a molla			Single pole spring terminal 2,5mmq		56.703.0055.0		22
-XQGPE	022.2321	Barra da 15x15mm con 10 fori 6mm							11
-XTL	022.0376	Connettore F303N5000 per prossimity con 5Mt di cavo.			Connettor F303N5000 for connector with 5Mt cable.		022.0376		1
-Z1	E002903	Toroide nucleo di ferrite N30 r40			Ferrites toroid core N30 R40		E002903	6	1
-Z2	E002903	Toroide nucleo di ferrite N30 r40			Ferrites toroid core N30 R40		E002903	6	1
-Z3	E002903	Toroide nucleo di ferrite N30 r40			Ferrites toroid core N30 R40		E002903	25	1
-Z4	E002903	Toroide nucleo di ferrite N30 r40			Ferrites toroid core N30 R40		E002903	9	1
-M5	P000008	Motore 0.37KW, 240/480V , 1.77/0.89A			Motor 0.37KW, 240/480V , 1.77/0.89A		P000008	7	1
-RE4	022.0210	Raccordo rapido dritto			Rapid straight Joint PG11/Ø16		SEM PG11/Ø16	30	1
	022.0281	Custodia plastica da incasso 1 leva Gr 21.21			Plastic Case Embedding One Lever Gr 21.21		CK 03 I- ILME		1
	022.0282	Custodia plastica mobile PG11 con pioli Gr 21.21			Plastic Case Embedding PG11 Gr 21.21		CK 03 VS - ILME		1
-RE5	022.0210	Raccordo rapido dritto			Rapid straight Joint PG11/Ø16		SEM PG11/Ø16	30	1
	022.0281	Custodia plastica da incasso 1 leva Gr 21.21			Plastic Case Embedding One Lever Gr 21.21		CK 03 I- ILME		1
	022.0282	Custodia plastica mobile PG11 con pioli Gr 21.21			Plastic Case Embedding PG11 Gr 21.21		CK 03 VS - ILME		1

REV.	MODIFICA	DATA	FIRME
R.0.3	BOM review	06/11/2018	Solfanelli
R0.2.	Added RSE2 safety module	24/10/2018	Solfanelli
R0.1	Con Cablaggio per inverter MITSUBISHI FR-D700	03/09/2018	Solfanelli

Dis. N. H320A/480ULCSA/4618
CAD SPAC
File H320A\1.dwg
Data 12/11/2018

Impianto/Plant
Schematic H-320A_480/60Hz
PLC HW 1

Denominazione/Title
DISTINTA CAVI
Cable list

Ordine/Requisition
Commessa/Order H-320A
Esecutore/Executor Solfanelli

Foglio/Page 42
Segue/Follow 43
Ultimo/Last 217

0	1	2	3	4	5	6	7	8	9
Nome/Item	MEP CODE	Descrizione/Description			Descrizione EN		Codice Interno	Fg/Sh	Q.ta/Q.ty
XMET	022.0282 + 022.0261	Connettore volante ILME (CK03VS pioli + CKM03)			Mobile connector ILME (CK03VS + CKM03) 4 poles		CK03VS + CKM03		1
-S23	E001405	Pulsante nero			Black push button		E001405	20	1
	E000937	Blocchetto NA			Normally open contact		E000937		1
	E000911	Portacontatti per pulsantiera			Carrier for push button		E000911		1
-XR0	022.0369	Connettore 3 poli per tensionatore elettronico			Connector 3-poles for strain gauge		022.0369		1
-XS7	022.0369	Connettore 3 poli per tensionatore elettronico			Connector 3-poles for strain gauge		022.0369		1

REV.	MODIFICA	DATA	FIRME
R.0.3	BOM review	06/11/2018	Solfanelli
R0.2.	Added RSE2 safety module	24/10/2018	Solfanelli
R0.1	Con Cablaggio per inverter MITSUBISHI FR-D700	03/09/2018	Solfanelli

Dis. N. H320A/480ULCSA/4618
CAD SPAC
File H320A\1.dwg
Data 12/11/2018

Impianto/Plant
Schematic H-320A_480/60Hz
PLC HW 1

Denominazione/Title
Distinta Materiali
MATERIAL LIST

Ordine/Requisition
Commessa/Order H-320A
Esecutore/Executor Solfanelli

Foglio/Page 43
Segue/Follow 100
Ultimo/Last

MEP50 central unit

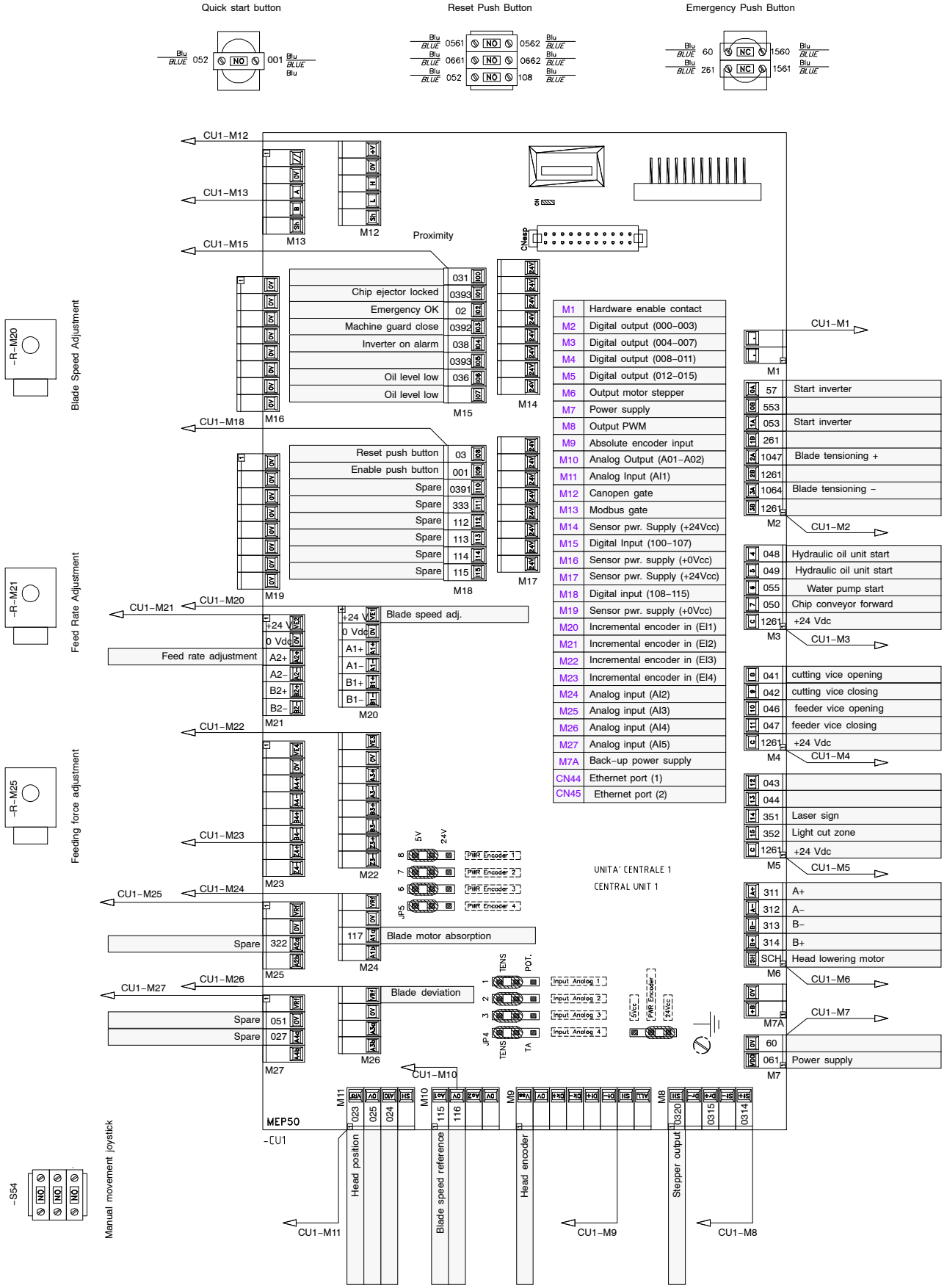

M1	Hardware enable contact
M2	Digital output (000–003)
M3	Digital output (004–007)
M4	Digital output (008–011)
M5	Digital output (012–015)
M6	Output motor stepper
M7	Power supply
M8	Output PWM
M9	Absolute encoder input
M10	Analog Output (A01–A02)
M11	Analog Input (AI1)
M12	Canopen gate
M13	Modbus gate
M14	Sensor pwr. Supply (+24Vcc)
M15	Digital Input (100–107)
M16	Sensor pwr. supply (+0Vcc)
M17	Sensor pwr. Supply (+24Vcc)
M18	Digital input (108–115)
M19	Sensor pwr. supply (+0Vcc)
M20	Incremental encoder in (EI1)
M21	Incremental encoder in (EI2)
M22	Incremental encoder in (EI3)
M23	Incremental encoder in (EI4)
M24	Analog input (AI2)
M25	Analog input (AI3)
M26	Analog input (AI4)
M27	Analog input (AI5)
M7A	Back-up power supply
CN44	Ethernet port (1)
CN45	Ethernet port (2)

Exploded views

This part of the manual contains detailed exploded views of the machine which can help to gain a deeper knowledge of how it is made.

Idler pulley unit

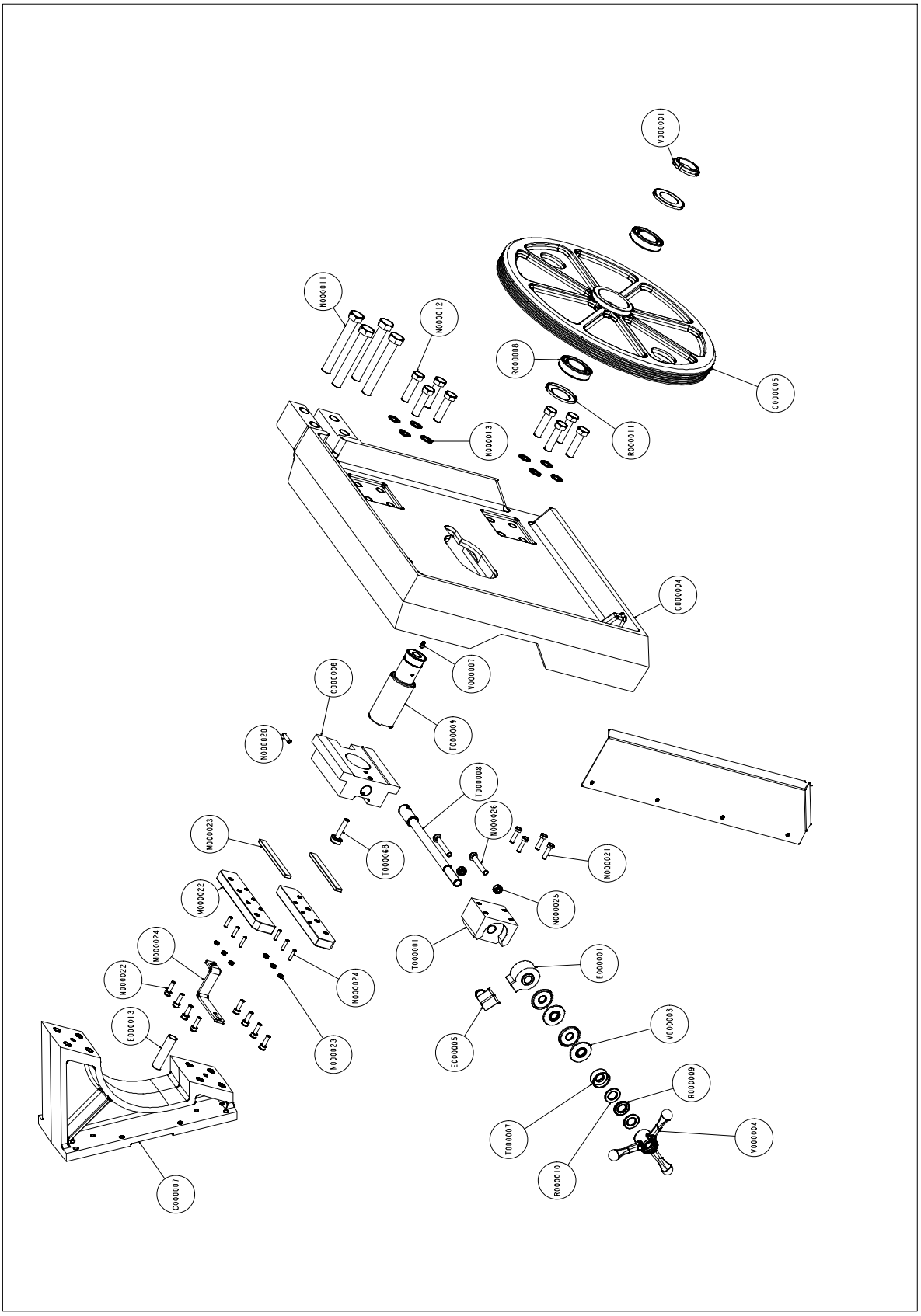

Code	Ref.	Description	Description	Q.ty
	C000004	PART	ARCHETTO-SPF-H-11	1
001.4412	C000006	PART	SLITTA-TENDILAMA-SH400	1
	T000009	PART	PERNO-PULEGGIA-FOLLE-H11	1
025.0275	R000011	PART	NILOS-32009X	2
025.0075	R000008	PART	32009X	2
	C000005	PART	PULEGG-FOLLE-H11	1
010.0356	V000001	PART	GHIERA-45-15	1
010.1201	N000011	PART	M20X140-TE	4
010.7642	N000013	PART	ROSETTA-GR-M16	8
010.7972	N000012	PART	M16X60-TE	8
	C000007	PART	STAFFA-AGG-ARCHETTO-H11	1
	M000023	PART	LANDRONE-SLITTA-H11	2
	M000022	PART	PIASTRA-REG-SLITTA-LANDRONE-H11	2
	M000024	PART	STAFFA-PROXIMETRY-H11	1
010.7461	N000024	PART	M6X25-VCEI-P	6
010.8152	N000023	PART	DADO-M6-BASSO	6
010.7894	N000022	PART	M8X25-TCEI	8
010.7964	N000021	PART	M8X30-TE	4
010.1204	V000007	PART	OLIATORE-A-SFERA-DIA6	1
010.7480	N000020	PART	M8X30-VCEI-P	1
	T000068	PART	PERNO-BLOCCO-TENS-LAMA-H11	1
	E000013	PART	PROXIMITY-H11	1
	T000001	PART	SUPPORTO-TENSION-LAMA-H11	1
	T000008	PART	PERNO-TENSIONAMENTO-LAMA-H11	1
010.0915	V000003	PART	MOLLA-A-TAZZA-18-50-3	4
	T000007	PART	DISTANZ-TENSION-LAMA-H11	1
025.0084	R000010	PART	RALLA-GS-81104	2
025.0934	R000009	PART	CUSCINETTO-ASSIALE-K81-104	1
034.0212	V000004	PART	VOLANTINO-S20	1
010.8905	N000026	PART	M10X65-TE	2
010.7205	N000025	PART	DADO-M10	2
022.2152	E000001	PART	TENSIONATORE-ELETTRON-COMP1	1
022.0369	E000005	PART	TENSIONATORE-ELETTRON-COMP2	1

Driving pulley unit

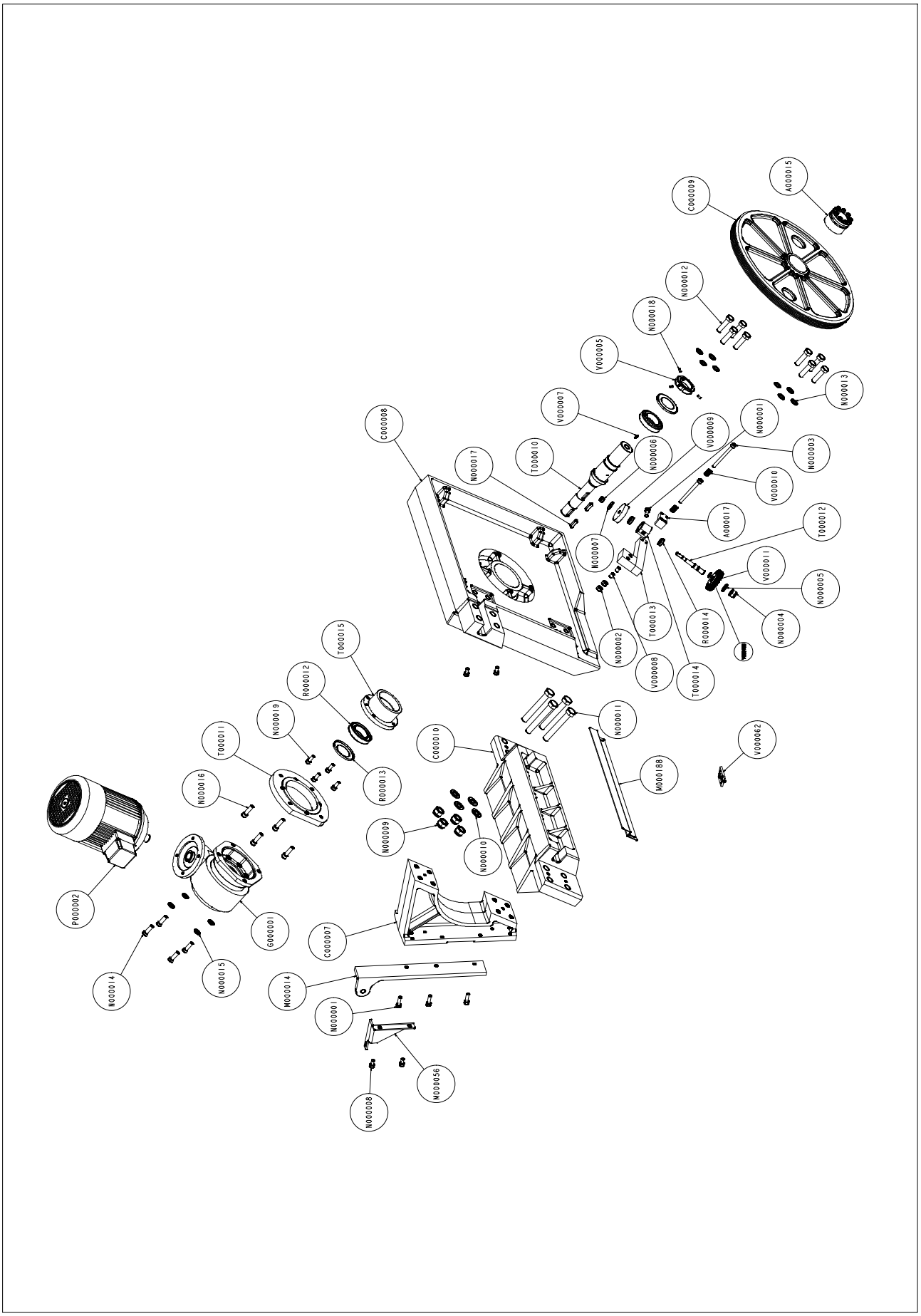

Code	Ref.	Description	Description	Q.ty
	C000008	PART	ARCHETTO-SPM-H-11	1
007.6607	T000015	PART	TAMPONE-RIDUTTORE-SH500	1
010.7923	N000019	PART	M10X25-TCEI	4
025.0979	R000012	PART	32011X-ISOCLASS	2
025.0276	R000013	PART	NILOS-32011X	2
	T000010	PART	ALBERO-RIDUTTORE-H11	1
010.0360	V000005	PART	GHIERA-SH500-NT	1
010.7451	N000018	PART	M6X12-VCEI-PC	3
010.7117	N000017	PART	LINGUETTA-A10X8X35	2
–	T000011	PART	GEAR-BOX-FLANGE-H320	1
010.7942	N000016	PART	M12X40-TCEI	4
025.0770	G000001	SUB-ASSEMBLY	RID-FCDPK85FC-112B14-FIXEDSTAR	1
010.7606	N000015	PART	ROSETTA-13X24	4
010.7986	N000014	PART	M12X35-TE	4
010.7642	N000013	PART	ROSETTA-GR-M16	8
010.7972	N000012	PART	M16X60-TE	8
	C000009	PART	PULEGG-MOTRICE-H11	1
025.0863	A000015	SUB-ASSEMBLY	CALETTATORE-TLK130-50X80	1
	C000007	PART	STAFFA-AGG-ARCHETTO-H11	1
010.1204	V000007	PART	OLIATORE-A-SFERA-DIA6	1
019.2002	P000002	PART	MOTORE-112	1
010.1201	N000011	PART	M20X140-TE	4
	C000010	PART	TRAVE-ARCHETTO-H-11	1
010.7616	N000010	PART	ROSETTA-21X37	4
010.8111	N000009	PART	DADO-AUTOB-M20	4
	M000056	PART	H320-LINEAR-POTENT-BRACKET	1
010.7911	N000008	PART	M10X20-TCEI	4
	M000014	PART	STAFFA-FIX-CIL-DIS-TESTA-H11-NT	1
010.7912	N000001	PART	M10X35-TCEI	3
	V000062	SUB-ASSEMBLY	CERNIERA-CINESE-CARTER-LAMA	1
	M000188	PART	H320-BLADE-COVER	1
	T000014	PART	SPAZZOLA-PULILAMA-2-H11	1
025.0088	R000014	PART	6001-2Z	2
	T000012	PART	ALBERO-SPAZZOLA-PULILAMA-H11	1
	V000009	PART	RUOTA-SPAZZOLA-PULILAMA-NEW	1
	V000011	PART	SPAZ-PULILAMA-DIA-60	1
010.7674	N000007	PART	ROSETTA-10_5X30	1
010.7230	N000006	PART	DADO-AUTOB-M10	1
010.7607	N000005	PART	ROSETTA-17X30	1
010.7233	N000004	PART	DADO-AUTOB-M16	1
	T000013	SUB-ASSEMBLY	STAFFA-SPAZ-PULIL	1
025.0802	V000008	PART	BOCCOLA-GRAFITATA-L15DIA10	2
010.0902	V000010	PART	MOLLA-PFISSO	2
010.7932	N000003	PART	M10X110-TCEI	2
010.8160	N000002	PART	DADO-M10-ALTO	2
010.7912	N000001	PART	M10X35-TCEI	1
010.1201	V000100	PART	SEEGER-15	1

Guide arms group

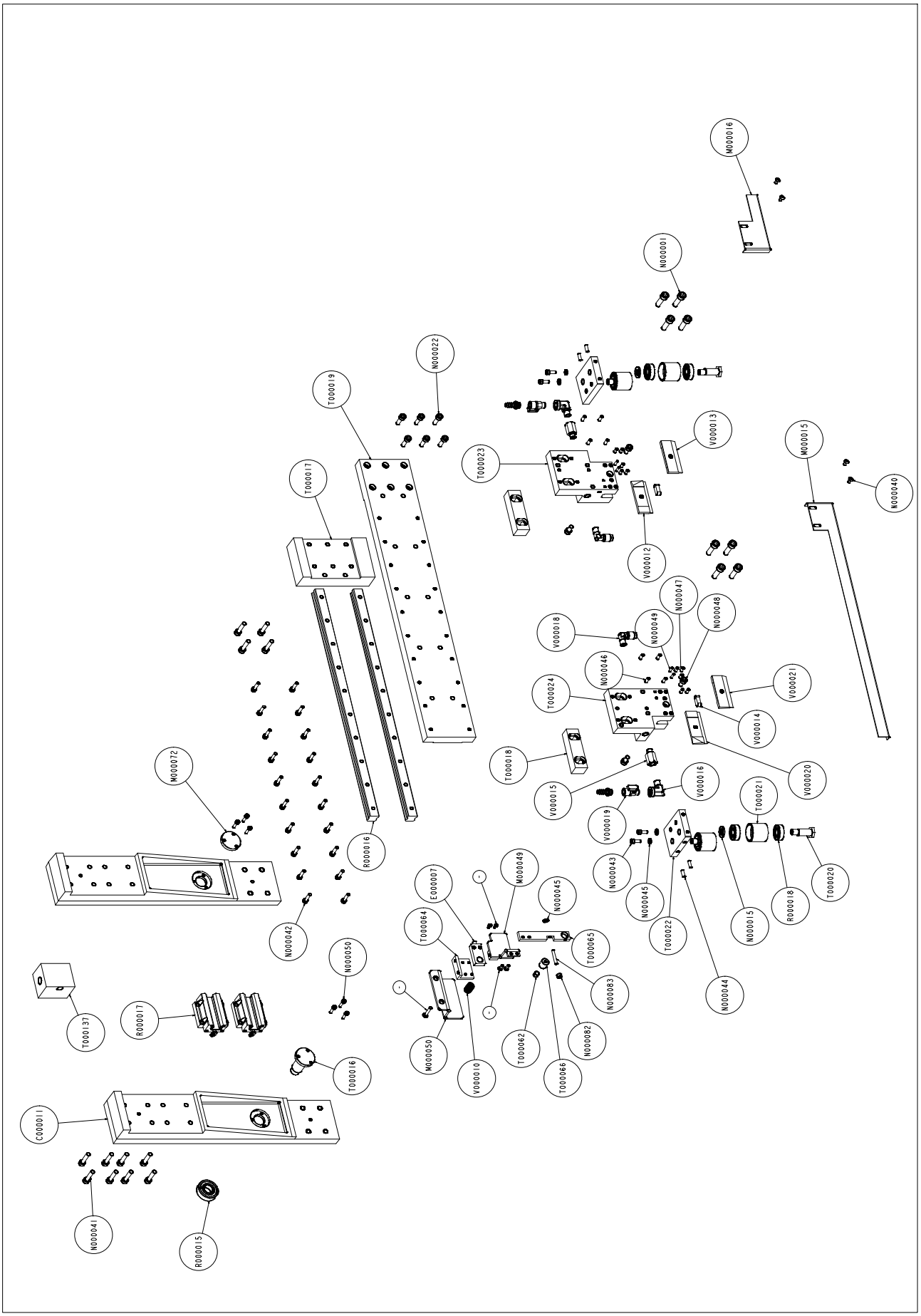

Code	Ref.	Description	Description	Q.ty
	T000019	PART	STAFFA-FIX-GUIDE-LIN-TEST-H11	1
	R000016	PART	GUIDA-HG25-L580	2
	R000017	PART	HGW25CC	2
	C000011	PART	STAFFA-TEST-GUIDA-LAMA-MOB-H11	2
	T000016	PART	ALBERO-TRASC-TEST-GUID-ANT-H11	1
010.7861	N000050	PART	M5X20-TCEI	6
025.0963	R000015	PART	62042Z	1
010.4308	T000018	PART	STAF-REG-TEST-GUID-SH310CNC-HS	2
	T000017	PART	DIST-STAFFA-TEST-FISSA-H11-NT	1
	M000015	PART	CARTER-LAMA-ANTERIORE-H11	1
	M000016	PART	CARTER-LAMA-POSTERIORE-H11	1
010.7872	N000042	PART	M6X25-TCEI	20
010.7896	N000041	PART	M8X35-TCEI	16
010.7894	N000022	PART	M8X25-TCEI	6
010.7912	N000001	PART	M10X35-TCEI	8
010.7832	N000040	PART	M6X12-BUTTO	4
	M000072	PART	TAPPO-FORO-BRACCIO-TEST-H11	1
	T000137	PART	H320-LASER-BLOCK	1
	T000024	PART	TEST-GUID-POST-H11	1
010.1731	V000014	PART	LINGUETTA-PREMILAM-SH500	2
010.1726	V000020	PART	GUIDALAMA-ANT-FIX-SH400	1
010.1724	V000021	PART	GUIDALAMA-ANT-MOBILE-SH400	1
043.0196	V000018	PART	RACCORDO-GOMITO-MF8X1_4CL1020	1
044.0651	V000015	PART	PROL-1_4-ESAGONALE-20MM	2
044.0552	V000016	PART	RACC-GOMITO-IDRAULICO-MF-1_4	2
043.0652	V000019	PART	RUBINETTO-1_4-F-M	2
010.7891	N000048	PART	M8X16-TCEI	4
010.7467	N000047	PART	M6X12-VCEI-P	10
010.9106	N000049	PART	M4X16-VCEI-P	8
010.7466	N000046	PART	M6X16-VCEI-P	4
010.0860	T000022	PART	SUPP-ECCENTRICO-TEST-SH420	1
010.3734	T000020	PART	PERNO-RULLO-PREMILAMA-SH410	2
025.0087	R000018	PART	6202-2Z	4
010.0859	T000021	PART	RULLO-PREMILAMA-SH420	2
010.7603	N000045	PART	ROSETTA-6_4X12_5	3
010.7452	N000044	PART	M6X16-VCEI-PC	2
010.7870	N000043	PART	M6X16-TCEI	2
010.7606	N000015	PART	ROSETTA-13X24	2
	T000023	PART	TEST-GUID-ANT-H11	1
010.1723	V000013	PART	GUIDALAMA-POST-MOBILE-SH400	1
010.1725	V000012	PART	GUIDALAMA-POST-FIX-SH400	1
043.0196	V000018	PART	RACCORDO-GOMITO-MF8X1_4CL1020	1
	T000065	PART	STAFFA-FIX-PREMILAMA-H11	1
010.0902	V000010	PART	MOLLA-PFISSO	1
	M000050	PART	SUPPORTO-SENS-DEV-LAMA-H11	1
010.4758	T000064	PART	ST-FIX-SENS-DEV-LAMA-SH420	1
022.0537	E000007	PART	SENS-IND-DEV-LAMA-SH420	1
010.7226	N000082	PART	DADO-AUTOB-M6	1
010.7470	N000083	PART	M6X35-VCEI-P	1
	T000066	PART	TASTATORE-PREMILAMA-H11	1
010.1721	T000062	PART	BOTTONE	1

Cradle unit

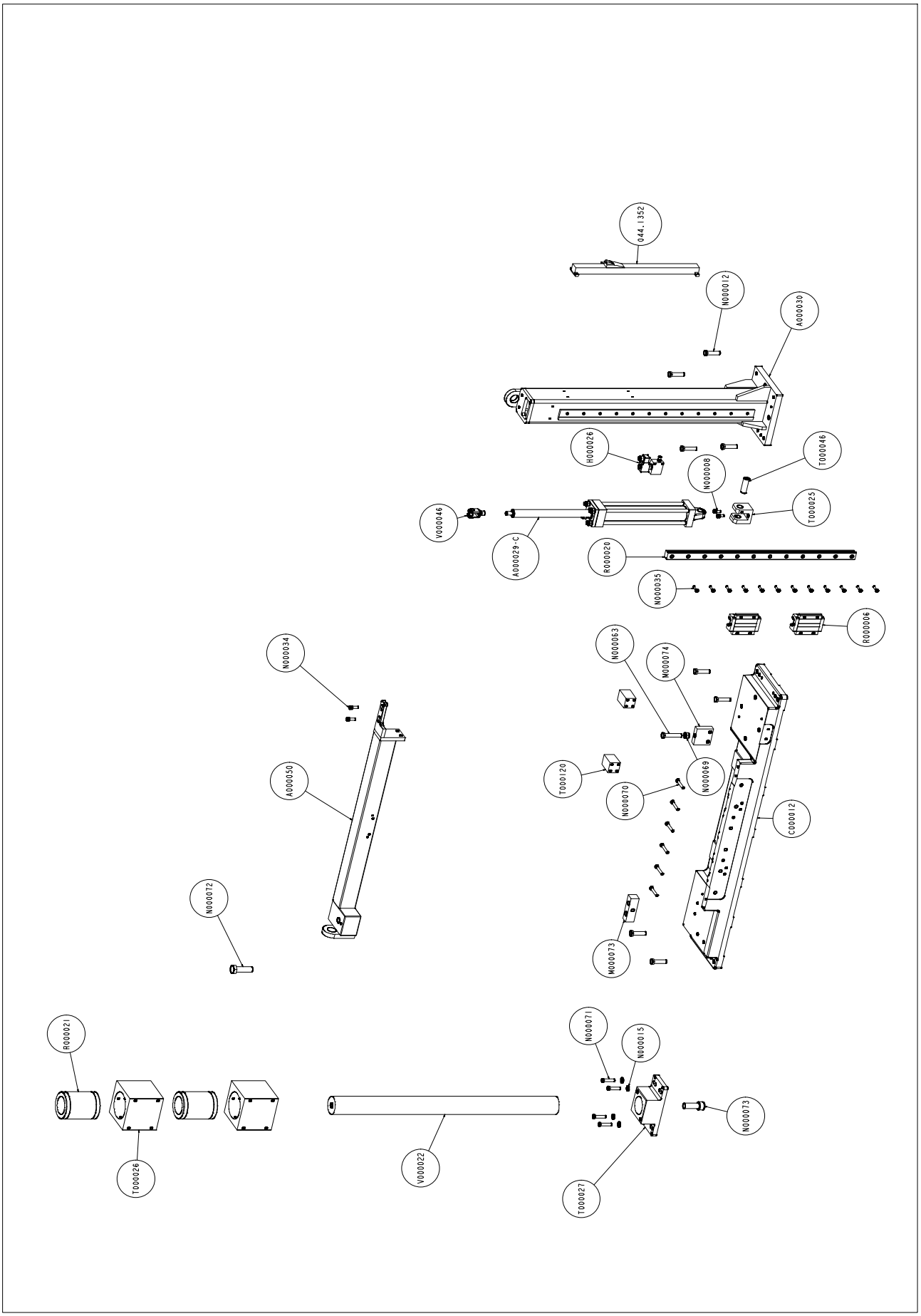
Q44.1352
N000012
A000030
H000026
T000046
N000008
T000025
V000046
A000029-C
R000026
N000035
R000006
N000034
N000063
M000074
A000050
T000120
N000069
N000070
C000012
N000072
M000073
R000021
N000071
N000015
N000073
T000026
V000022
T000027

Code	Ref.	Description	Description	Q.ty
	C000012	PART	CULLA–H11	1
	A000030	SUB–ASSEMBLY	COLONNA–SPM–H11	1
	R000020	PART	GUIDA–HGW35–920E20	1
	T000025	PART	STAF–AGG–CIL–DISC–TESTA–H11	1
	A000029–C	SUB–ASSEMBLY	HEAD–CYLINDER–H320	1
	R000006	PART	HGW35HC	2
	T000027	PART	SUPPORTO–COLONNA–SPF–H11	1
	V000022	PART	COLONNA–ARCHETTO–H11	1
	R000021	PART	MANICOTTO–SKF–80–120–165	2
	T000026	PART	STAFFA–AGG–SPF–COLONNA–H11	2
	A000050	SUB–ASSEMBLY	GRUPPO–TRAVE–COLLEG–COLONNE–H11	1
	V000046	PART	FISSAGGIO–TESTA–CILIN–TESTA–H11	1
010.1201	N000073	PART	M24X70–TCEI	1
010.1201	N000072	PART	M24X80–TE	1
010.7972	N000012	PART	M16X60–TE	8
010.7895	N000035	PART	M8X30–TCEI	12
010.7606	N000015	PART	ROSETTA–13X24	4
010.8916	N000071	PART	M12X50–TE	4
010.7980	N000070	PART	M10X60–TE	6
010.7911	N000008	PART	M10X20–TCEI	2
010.7924	N000034	PART	M10X30–TCEI	2
	M000073	PART	BLOCCO–REGOLAZ–COLONNA–FOLLE	1
	M000074	PART	BATTUTA–MECCANICA–SPM–H11	1
	N000063	PART	M16X80–TE	1
010.8163	N000069	PART	DADO–M16–ALTO	1
	T000046	PART	PERNO–CILINDRO–TESTA–H11	1
044.1250	H000026	PART	VALVOLA–BLOC–PG–V30–C–CE–C–V24	1
	T000120	PART	H320–FEEDER–HOLDING–BRACKET	2
044.1352	044.1352	SUB–ASSEMBLY	TRASD–POSIZ–TLH450	1

Cutting vice unit

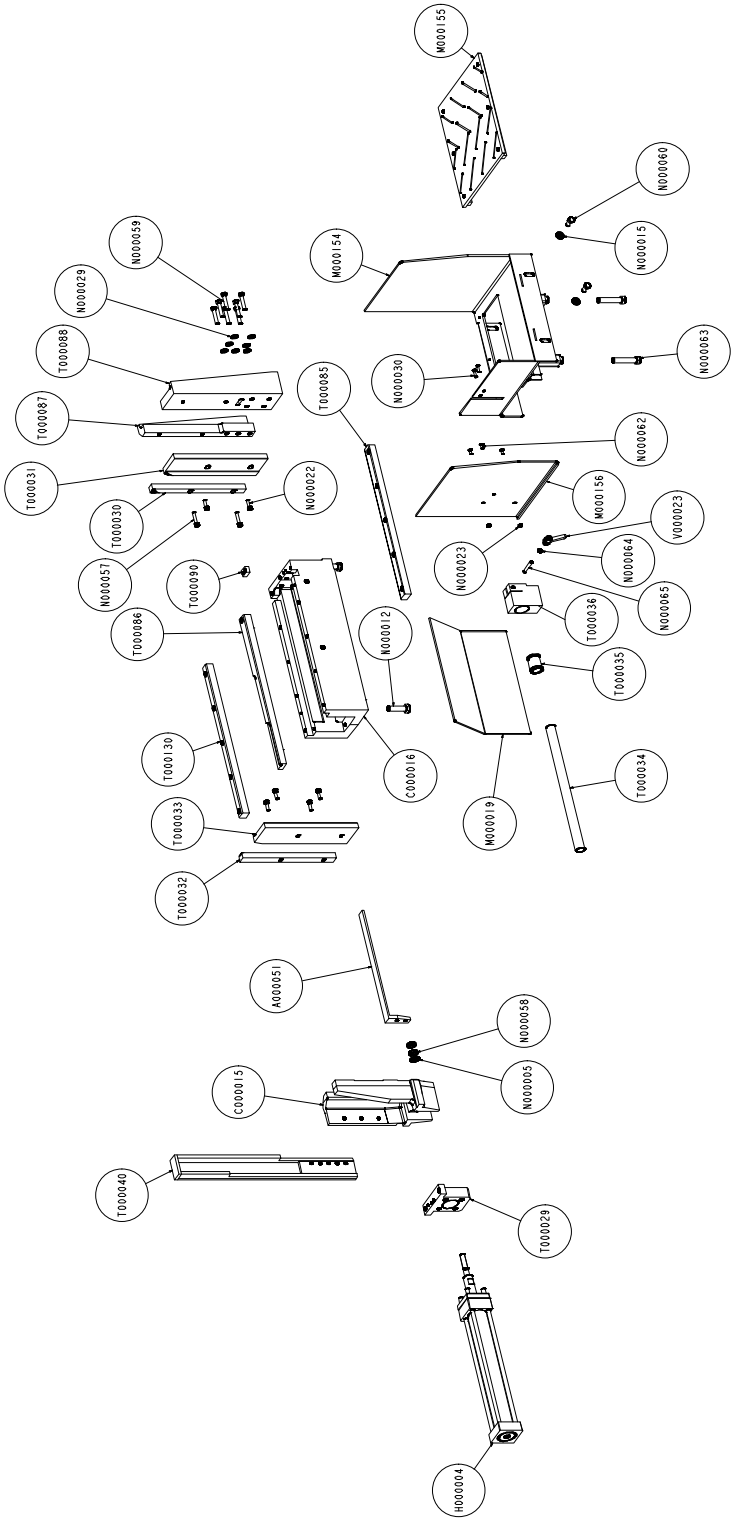

Code	Ref.	Description	Description	Q.ty
	C000016	PART	MORSA–CORTA–NT–H11	1
	T000088	PART	MORSA–FISSA–LATO–SCARICO–H11	1
	T000029	PART	FLANGIA–PISTONE–MORSA–H11	1
	H000004	SUB–ASSEMBLY	CILINDRO–MORSA–TAGLIO–H11	1
	C000015	PART	SCORREVOLE–MORSA–H–11	1
	T000085	PART	PIANO–TAGLIO–CORTO–NT–H11	1
	T000086	PART	PIASTRA–APPOGGIAP–CORTA–NT–H11	1
	T000033	PART	OUTBOARD–SLIDING–VICE–H320	1
	T000032	PART	INFEED–SLIDING–VICE–H320	1
	A000032	SUB–ASSEMBLY	H320–DISCHARGE–TABLE	1
	T000031	PART	OUTBOARD–DATUM–VICE–H320	1
010.7972	N000012	PART	M16X60–TE	2
	T000040	SUB–ASSEMBLY	H320–PULLING–ARM	1
	A000051	PART	PIANO–SCORREVOLE–MORSA	1
010.7894	N000022	PART	M8X25–TCEI	6
010.7606	N000015	PART	ROSETTA–13X24	2
010.8914	N000060	PART	M12X25–TE	2
010.7605	N000029	PART	ROSETTA–10_5X21	7
010.7979	N000059	PART	M10X50–TE	7
010.7607	N000005	PART	ROSETTA–17X30	1
010.7221	N000058	PART	DADO–M16–BASSO	2
	T000087	PART	MORSA–FISSA–LATO–CARICO–H11	1
	T000030	PART	INFEED–DATUM–VICE–H320	1
010.7897	N000057	PART	M8X40–TCEI	2
	T000090	PART	SPESSORE–PIANO–SCORREVOLE–H11	1
	T000130	PART	H320–INFEED–CUTTING–PLANE	1
	M000154	SUB–ASSEMBLY	H320–DISCHARGE–TABLE–FRAME	1
–	T000036	PART	OUTFEED–TABLE–ALUM–BRACKET–H320	1
025.0047	T000035	PART	MANICOTTO–DIA–30	1
	T000034	PART	ASTA–GUIDA–SCARICA–PEZZI–H11	1
010.9125	N000065	PART	M8X60–VCEI–P	1
010.7604	N000064	PART	ROSETTA–8_4X14	1
034.1001	V000023	PART	LEVA–SCATTO–M8	1
	–	PART	H320–DISCHARGE–SLIDING–JAW	1
	M000019	PART	SCARICAPEZZI–6–H11	1
	N000063	PART	M16X80–TE	2
010.7994	N000062	PART	M6X12–TSPEI	3
010.8152	N000023	PART	DADO–M6–BASSO	2
010.7951	N000030	PART	M6X20–TE	2
	M000155	SUB–ASSEMBLY	H320–DISCHARGE–PLANE	1

Feeder roller conveyor group

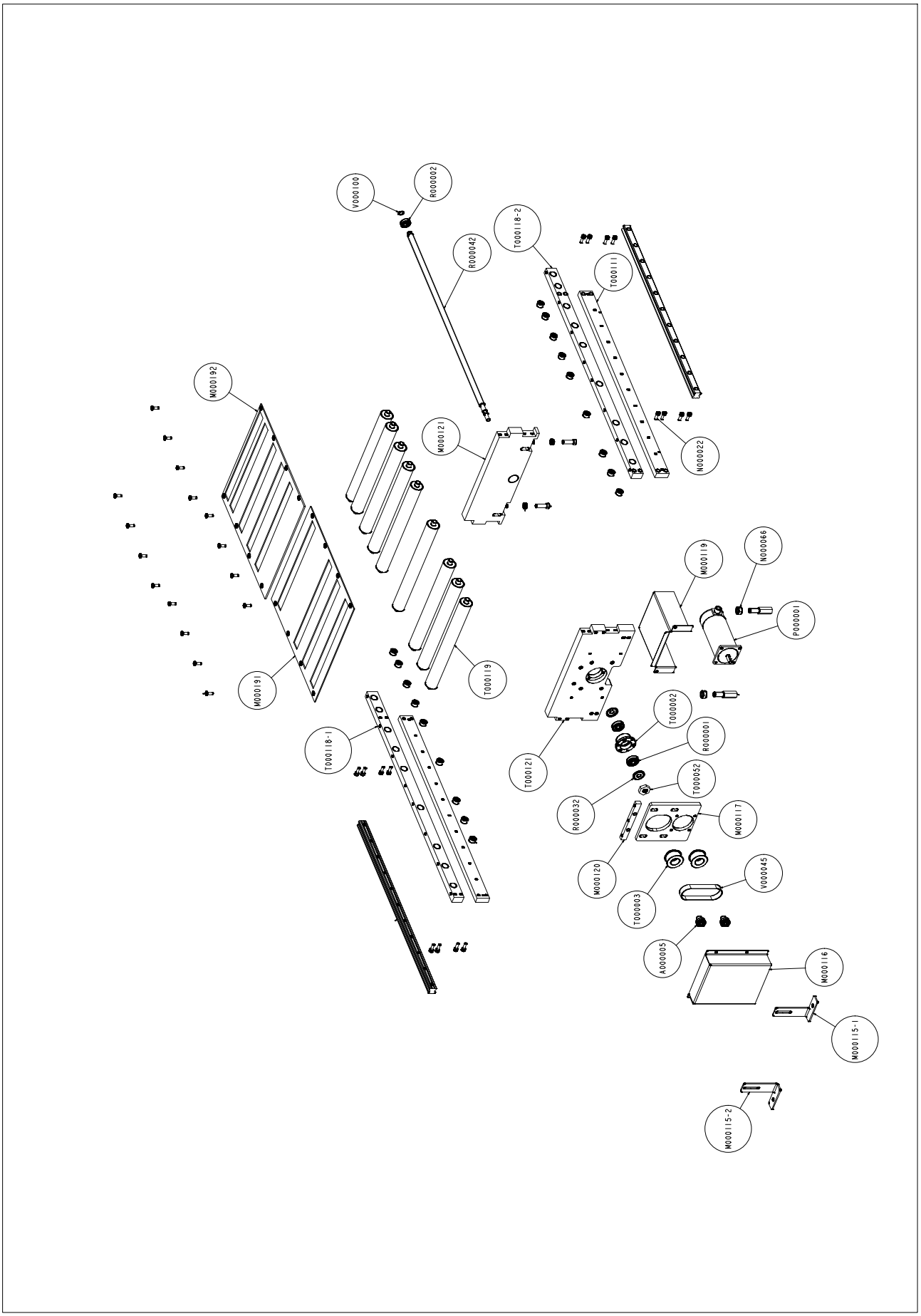

Code	Ref.	Description	Description	Q.ty
	T000121	PART	H320–FEEDER–3	1
	T000118–2	PART	H320–FEEDER–1	1
	T000118–1	PART	H320–FEEDER–14	1
010.7894	N000022	PART	M8X25–TCEI	16
	M000121	PART	H320–FEEDER–4	1
	M000191	PART	H320–FEEDER–2	1
	M000192	PART	H320–FEEDER–37	1
010.7997	–	PART	M8X20–TSPEI	16
	T000119	PART	H320–FEEDER–ROLLER	9
	T000111	PART	H320–FEEDER–5	2
	T000002	PART	MANICOTTO–VITE–RICIRC–H11	1
025.0970	R000001	PART	30302	2
025.0278	R000032	PART	NILOS–30302	2
	R000042	PART	H320–FEEDER–BALL–SCREW–D20P10	1
025.0921	R000002	PART	6003–2Z	1
010.1201	V000100	PART	SEEGER–15	1
010.0380	T000052	PART	GHIE–FIX–VITE–RIC–ALIM–SH–NT	1
025.0185	T000003	PART	PUL–DENT–MOTORE–ALIM–SH230	2
025.0867	A000005	SUB–ASSEMBLY	CALETTATORE–TLK110–12X18	2
	M000117	PART	H320–FEEDER–23	1
019.3407	P000001	PART	MOTORE–PP–FL86STH156–570–AL	1
025.0034	V000045	PART	CINGHIA–RULL–ALIM–SH230	1
	M000115–1	PART	H320–FEEDER–29	1
	M000115–2	PART	H320–FEEDER–30	1
	M000120	PART	H320–FEEDER–31	1
	M000116	PART	H320–FEEDER–32	1
010.7208	N000066	PART	DADO–M16	2
	M000119	PART	H320–FEEDER–35	1

Feed carriage unit

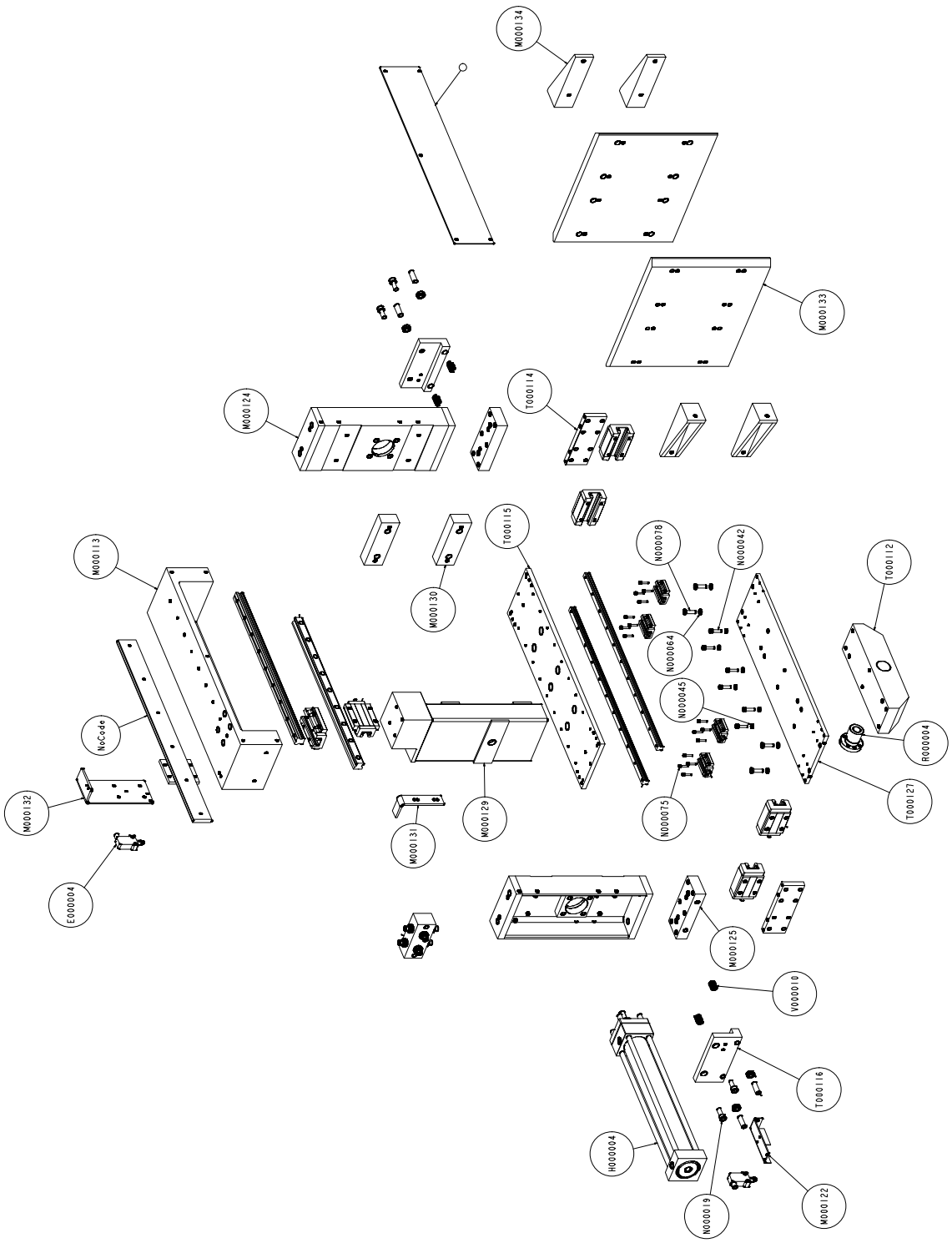

Code	Ref.	Description	Description	Q.ty
	T000115	PART	H320-FEEDER-26	1
	T000114	PART	H320-FEEDER-6	2
	T000112	PART	H320-FEEDER-SCREW-SHUTTLE	1
010.7603	N000045	PART	ROSETTA-6_4X12_5	6
010.7872	N000042	PART	M6X25-TCEI	6
010.7604	N000064	PART	ROSETTA-8_4X14	4
010.7963	N000078	PART	M8X25-TE	4
010.7853	N000075	PART	M4X20-TCEI	16
010.3036	R000004	PART	CHIOCCIOLA-R20-10T2-RSI	1
	M000125	PART	H320-FEEDER-27	2
	M000124	SUB-ASSEMBLY	H320-FEEDER-COLUMN-B	2
	M000113	PART	H320-FEEDER-TOP-BEAM	1
	M000129	PART	H320-FEEDER-VICE-TOP-FLANGE	1
	H000004	SUB-ASSEMBLY	CILINDRO-ALIMENT-NT-H320	1
	T000116	PART	H320-FEEDER-15	2
010.0902	V000010	PART	MOLLA-PFISSO	4
010.7923	N000019	PART	M10X25-TCEI	4
	M000130	PART	H320-FEEDER-28	2
	M000132	PART	OUT-OF-STOCK-LIM-SW-BRA-H320	1
022.0543	E000004	PART	FINECORSA-A-ROTELLA	2
	M000122	PART	FEEDER-CHAIN-BRACKET-H320	1
	M000133	PART	H320-FEEDER-SLIDING-JAW	2
	M000131	PART	H320-FEEDER-34	4

Base assembly

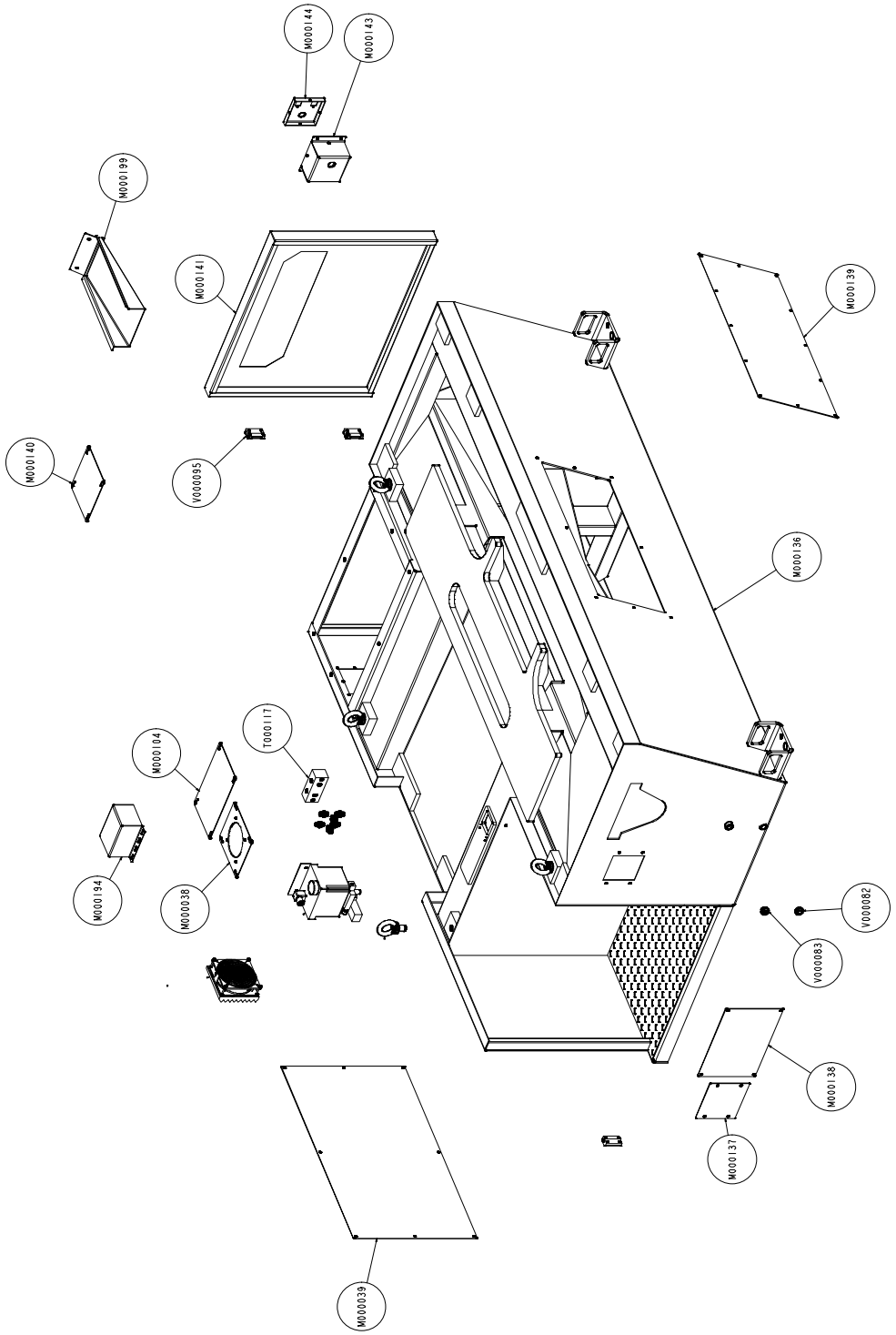

Code	Ref.	Description	Description	Q.ty
	M000136	SUB–ASSEMBLY	H320–BASE	1
	M000141	PART	PROTECTION–9–H320	1
034.0905	V000082	PART	TAPPO–OLIO–TAO_3–1_2NERO	1
034.0901	V000083	PART	TAPPO–LIVELLO–OLIO–1_2–GAS	1
	M000038	PART	BASE–78–H320	1
	M000138	PART	BASE–54–H320	1
	M000143	PART	BASE–66–H320	1
	M000144	PART	BASE–67–H320	1
	M000137	PART	BASE–68–H320	1
	M000140	PART	BASE–74–H320	1
	M000104	PART	BASE–75–H320	1
	M000194	PART	FEEDER–CHAIN–COVER–H320	1
	M000199	PART	BASE–77–H320	1
	M000039	PART	BASE–8–H320	1
	T000117	PART	POWER–PACK–MANIFOLD–H320–2	1

Control panel

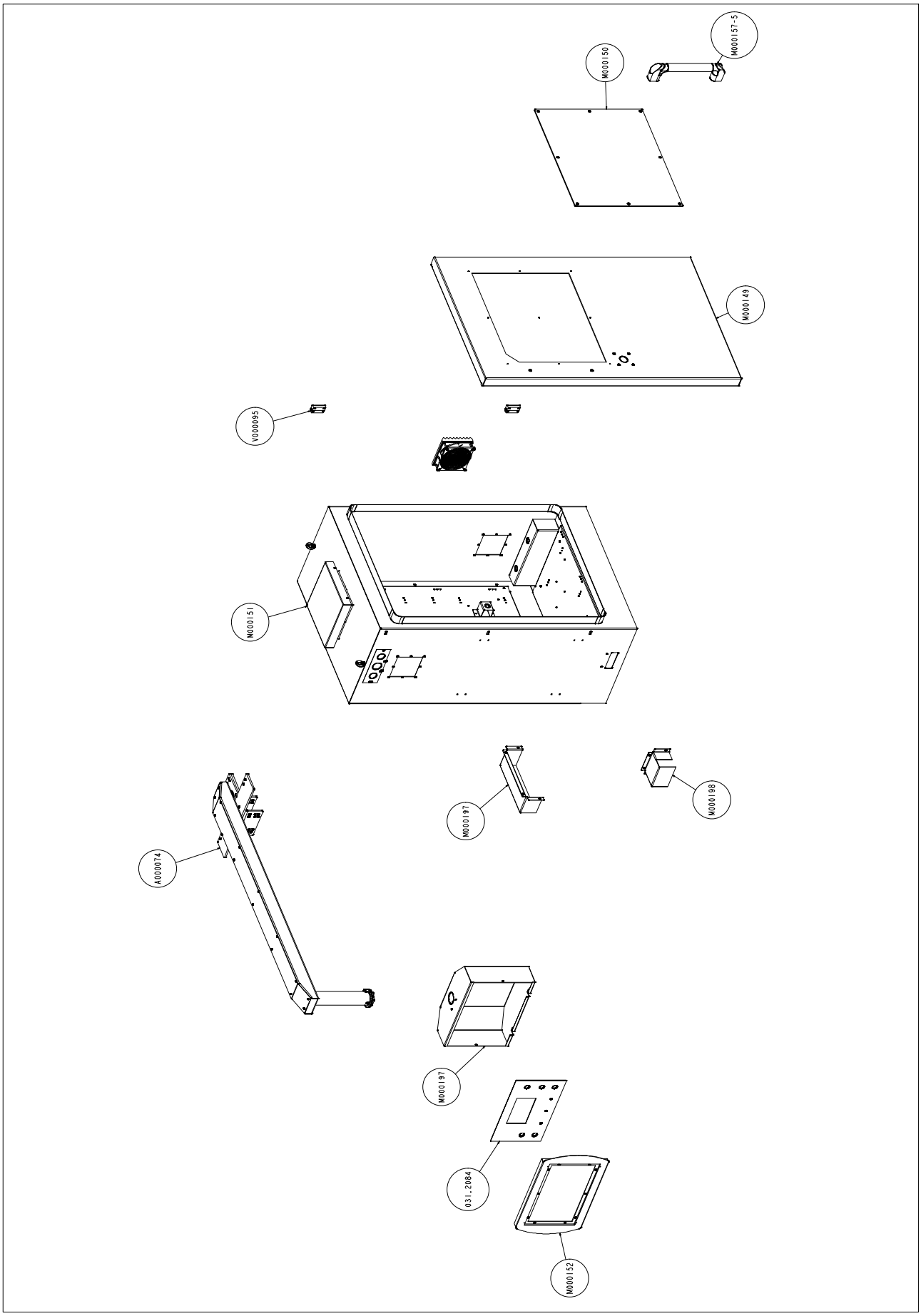

Code	Ref.	Description	Description	Q.ty
	M000151	SUB–ASSEMBLY	CABINET–H320	1
	M000149	PART	CABINET–H320–13	1
	M000150	PART	LEXAN–3–H320	1
	M000157 –5	PART	ETH_35_300_EP_C2	1
	A000074	SUB–ASSEMBLY	PENDULUM–PANEL–H320	1
	M000197	SUB–ASSEMBLY	DASHBOARD–PANEL–H320	1
	M000152	SUB–ASSEMBLY	DASHBOARD–PANEL–H320–5	1
031.2084	031.2084	PART	CONSOLLE–PROGRAM–TS50_1–SE-RIE–H	1
	M000197	PART	H320–HOSES–COVER	1
	M000198	PART	H320–HOSES–COVER–2	1
	–	SUB–ASSEMBLY	GRUPPO–VENTOLA–FILTRO–CINA	1

Hydraulic group

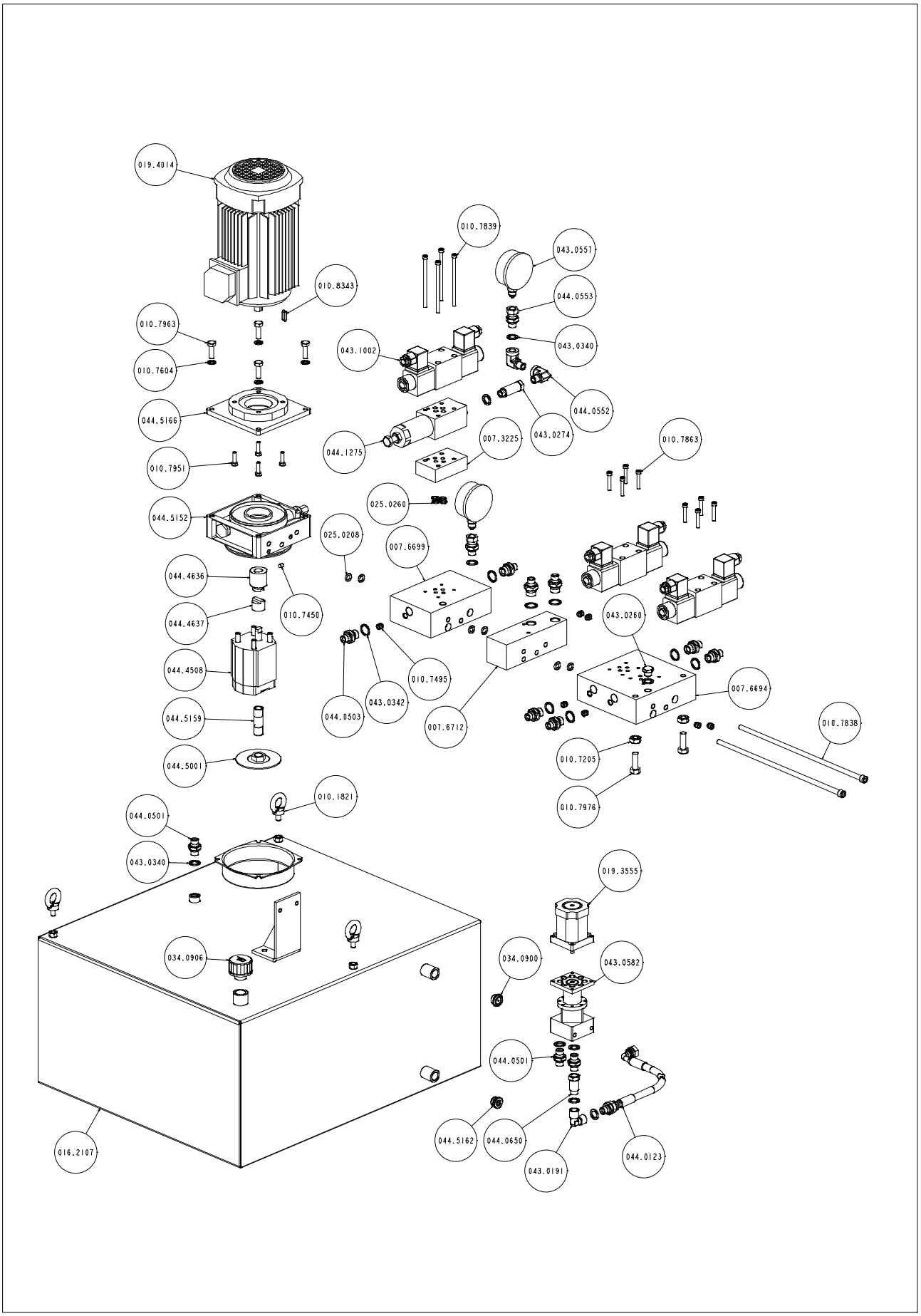

Code	Description	U. of M.	Quantity
043.1002	ELETTROVALVOLA MD 1L–S1/10N–D24K1 CON BOBINA X CENTRALINA SXI–EVO	ELECTROVALVE FOR HYDRAULIC UNIT SXI EVO	3.000
044.5152	COLLETTORE PER POMPA DA 5 X NC–EVO	SQUARE FOR PUMP SUPPORT	1.000
043.0582	REGOLATORE DISCESA TESTA MOTORIZZ. X H 14–A (BAFFO B)	POWERED HEAD DOWN STROKE REGULATOR H14A	1.000
025.0208	ANELLO TENUTA OR 109–9,13	O RING 109–9,13	22.000
025.0260	ANELLO DI TENUTA OR 20379,25 X 1,78 – 90 SHOREE	O RING 2037	4.000
007.3225	DISTANZIALE VALVOLA REGOLATRICE DIPRESSIONE SH 310 CNC–HS	REGU.PRES.VALVE SPACER SH 310 CNC–HS H14	1.000
044.5001	FILTRO OLIO X CENTRALINA IDRAULICA	OIL FILTER FOR HYDRAULIC UNIT	1.000
044.4636	GIUNTO COLLEGAMENTO LATO MOT. X MONOCENTRALINA SH NC–EVO	CONNECTING COUPLING FOR CENTRAL UNIT	1.000
044.4637	GIUNTO COLLEGAMENTO LATO POMPA X MONOCENTRALINA SH NC–EVO	PUMP CONNECTING COUPLING FOR CENTRALUNIT	1.000
010.1821	GOLFARE MASCHIO M 8 ZINCATO FC–CB	ZINC MALE BOLT M 8 FC–CB	2.000
010.8343	CHIAVETTA 5 X 5 X 20	KEY 5 X 5 X 20	1.000
010.7863	VITE TCEI 5 X 30	TCEI 5 X 30 SCREW	8.000
010.7839	VITE TCEI M5 X 95 TCEI	TCEI 5 X 95 SCREW	4.000
010.7951	VITE TE 6 X 20	TE 6 X 20 SCREW (010.7951)	4.000
010.7450	GRANO VCE PUNTA CONICA 6 X 6	6 X 6 CYLINDRICAL POINT VCE GRUB	1.000
010.7838	VITE TCEI M8 X 305 TCEI	TCEI 8 X 305 SCREW	2.000
043.0557	MANOMETRO 0–60 WIKA P.1275 PER CENTRALINA IDRAULICA	WIKA 0 60 MANOMETER SH 310 SXI	3.000
019.3555	MOTORE F257STH76–2804 X CILINDRO NC	MOTOR F257STH76–2804 FOR CYLINDER	1.000
044.0503	NIPPLO IDRAULICO M 3/8–M 1/4	HYDRAULIC FITTING M 3/8 M 1/4	6.000
044.0501	NIPPLO NP 1/4 IDRAULICO	NP 1/4 HYDRAULIC NIPPLE	8.000
007.6699	PANNELLO IDRAULICO 1 POSTOMONOCENTRALINE SH 310 CNC–HS	1POS.HYDR.PANEL MONOUNIT SH310CNC–HS	1.000
007.6694	PANNELLO IDRAULICO 2 POSTIMONOCENTRALINE SH 310 CNC–HS	2POS.HYDR.PANEL MONOUNIT SH310CNC–HS	1.000
044.4508	POMPA IDRAULICA X MONOCENTRALINA CC 8 H10–A E S20–A	HYDRAULIC PUMP FOR POWER PACK ––A––	1.000
044.0650	PROLUNGA 1/4 MF ESAGONALE 36 MM. SH 310SXI	1/4 MF HEX EXTENSION SH310SXI 36 MM	1.000
044.0553	RACCORDO IDRAULICO MF 1/4 GIREVOLE X MANOMETRO CENTRALINA	HYDRAULIC COUPLING FOR POWER PACK MANOM.	3.000
043.0340	RONDELLA RAME 13X19X1,5–1/4	13X19X1,5–1/4 COPPER WASHER	11.000
043.0342	RONDELLA RAME 3/8	3/8 COPPER WASHER	6.000
034.0900	TAPPO LIVELLO OLIO SLNT 38 3/8 PH 211 –POS. 210	SLNT 38 3/8 OIL LEVEL CAP	1.000
034.0906	TAPPO OLIO CENTRALINA IDRAULICA SH 310 SXI	HYDRAULIC UNIT OIL CAP SH 310 SXI	1.000
044.5162	TAPPO SCARICO OLIO ”A”AN 612 – 3/8 OR	OIL DRAIN TAP –A– AN 612 – 3/8 OR”	1.000
044.5166	FLANGIA MONOCENTRALINA NC–EVO X MOTORE	POWER PACK MOTOR FLANGE	1.000
043.0274	RACCORDO MF 1/4–43 CL 2525 SH 330	MF 1/4–43 CL 2525 SH 330 JOINT	1.000
044.0552	RACCORDO A GOMITO IDRAULICO MF 1/4 ALTA	HYDR. ELBOW JOINT M/F 1/4 HIGH PRESSURE	1.000
010.7976	VITE TE 10 X 30	TE 10 X 30 SCREW (010.7976)	1.000
010.7205	DADO M10	M10 SCREW NUT (010.7205)	1.000
019.4014	MOTORE CENTR.KW 1,1/1,3 C80 4PB14 S6 60%	MOTOR KW 1,1/1,3 C80 4PB14 S6 60%UL–CSA	1.000
010.7963	VITE TE 8 X 25	TE 8 X 25 SCREW (010.7963)	1.000
010.7604	RONDELLA 0 8	0 8 WASHER (010.7604)	1.000
044.5159	ASTA PESCANTE H10A ––A––	SUCTION ROD H10A ––A–– L 50 2X3/8GAS	1.000
016.2107	SERBATOIO CENTRALINA SH 350 5.0	HYDRAULIC UNIT TANK	1.000
044.1275	VALVOLA MODULARE RIDUTTRICE DI PRESSIONE	MODULER VALVE PRESS.REDUC. MBRV–02A	1.000
010.7495	GRANO VCE PUNTA PIANA 1/8 GAS	1/8”X9 FLAT POINT VCE GRUB SCREW	1.000

Code	Description	U. of M.	Quantity
007.6712	PANNELLO IDRAUL. X REGOLATORE PRESSIONE	HYDR.PANEL X REMOTE REGU.-PRES.FUTURO420	1.000
043.0340	RONDELLA RAME 13X19X1,5–1/4	13X19X1,5–1/4 COPPER WASHER	1.000
043.0260	TAPPO TTE4 1/4 – CL 2611	1/4 TAP TTE4	1.000
043.0191	RACCORDO A GOMITO CL 2013 FF 1/4	ELBOW JOINT FF 1/4 CL 2013	1.000
044.0123	TUBO CENTRALINA IDRAULICA MM.500 1X90? R	HYDR.UNIT HOSE MM 500 1X90¿ R7 1/4	1.000

Protection group

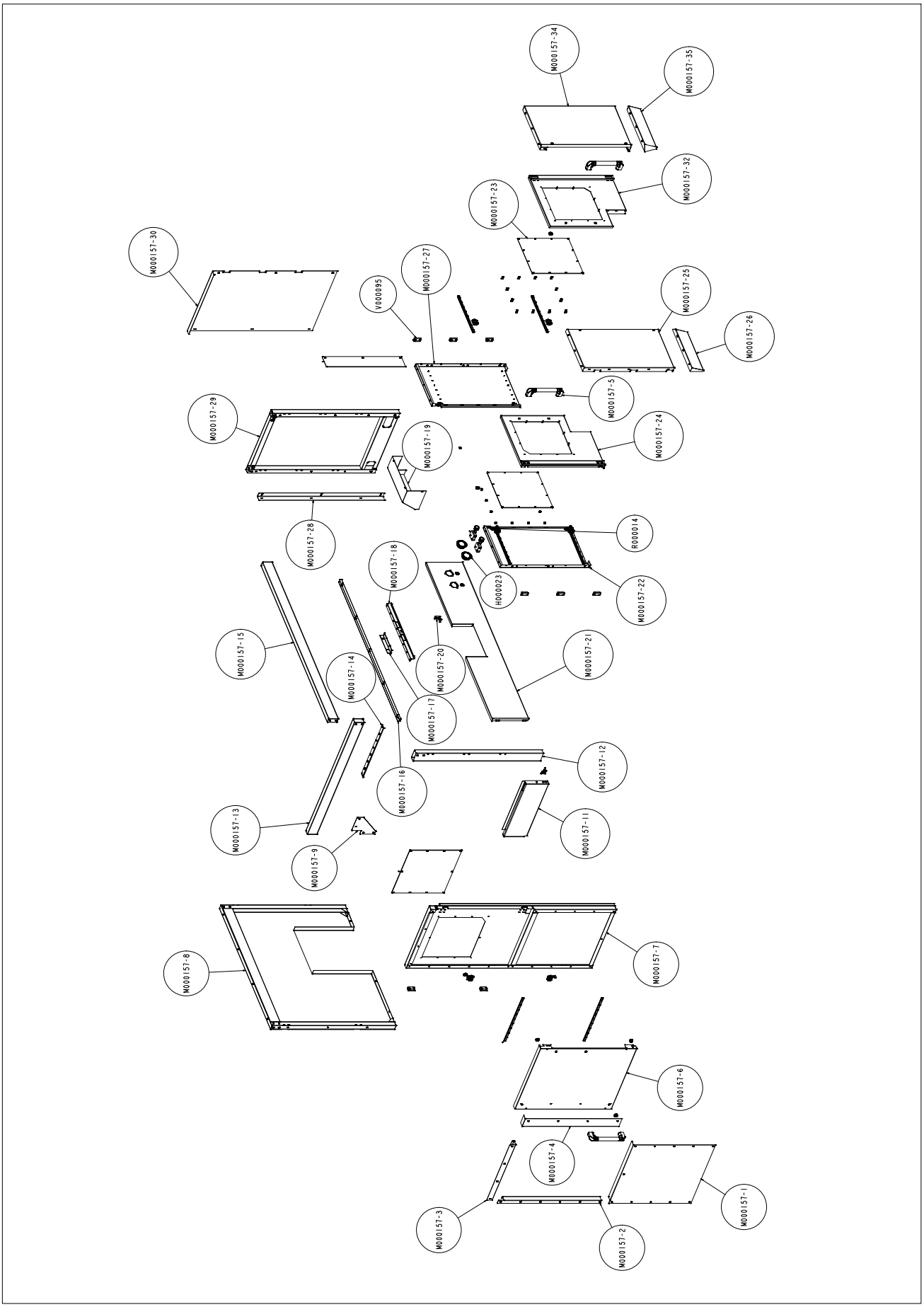

Code	Ref.	Description	Description	Q.ty
	M000157-21	SUB-ASSEMBLY	PROTECTION-FRAME-3-H320	1
	M000157-29	SUB-ASSEMBLY	PROTECTION-FRAME-1-H320	1
	M000157-12	PART	PROTECTION-FRAME-7-H320	1
	M000157-15	PART	PROTECTION-FRAME-14-H320	1
	M000157-18	PART	PROTECTION-FRAME-30-H320	1
	M000157-13	PART	PROTECTION-FRAME-16-H320	1
	M000157-8	SUB-ASSEMBLY	H320-BACK-PROTECTION	1
	M000157-11	PART	PROTECTION-FRAME-25-H320	1
	M000157-14	PART	PROTECTION-FRAME-35-H320	1
	M000157-20	PART	PROTECTION-FRAME-41-H320	3
	M000157-30	PART	PROTECTION-FRAME-5-H320	1
	M000157-28	PART	PROTECTION-FRAME-42-H320	1
	M000157-26	SUB-ASSEMBLY	FRONT-LEFT-COVER-H320	1
	M000157-35	SUB-ASSEMBLY	FRONT-RIGHT-COVER-H320	1
	M000157-17	PART	PROTECTION-FRAME-53-H320	1
	M000157-16	PART	WIRES-COVER-H320	1
	M000157-19	PART	PROTECTION-FRAME-70-H320	1
	M000157-4	PART	PROTECTION-FRAME-72	1
	H000023	PART	FLANGED-GAUGE	2
	M000157-9	PART	PROTECTION-FRAME-45-H320	1
	M000157-24	SUB-ASSEMBLY	H320-LEFT-SLIDING-DOOR	1
	M000157-25	SUB-ASSEMBLY	LEFT-DOOR-COVER-H320	1
	M000157-27	SUB-ASSEMBLY	H320-RIGHT-FIXED-DOOR	1
	M000157-32	SUB-ASSEMBLY	H320-RIGHT-SLIDING-DOOR	1
	M000157-23	PART	LEXAN-1-H320	1
	M000157-7	SUB-ASSEMBLY	H320-SIDE-FIXED-DOOR	1
025.0088	R000014	PART	6001-2Z	4
	M000157-6	SUB-ASSEMBLY	H320-SIDE-SLIDING-DOOR	1
	M000157-5	PART	ETH_35_300_EP_C2	1
121.0000	M000157-1	PROTECTION-FRAME-60-H320	PROTECTION-FRAME-60-H320	1
121.0000	M000157-2	PROTECTION-FRAME-61-H320	PROTECTION-FRAME-61-H320	1
121.0000	M000157-3	PROTECTION-FRAME-62-H320	PROTECTION-FRAME-62-H320	1

Motor–driven chip ejector

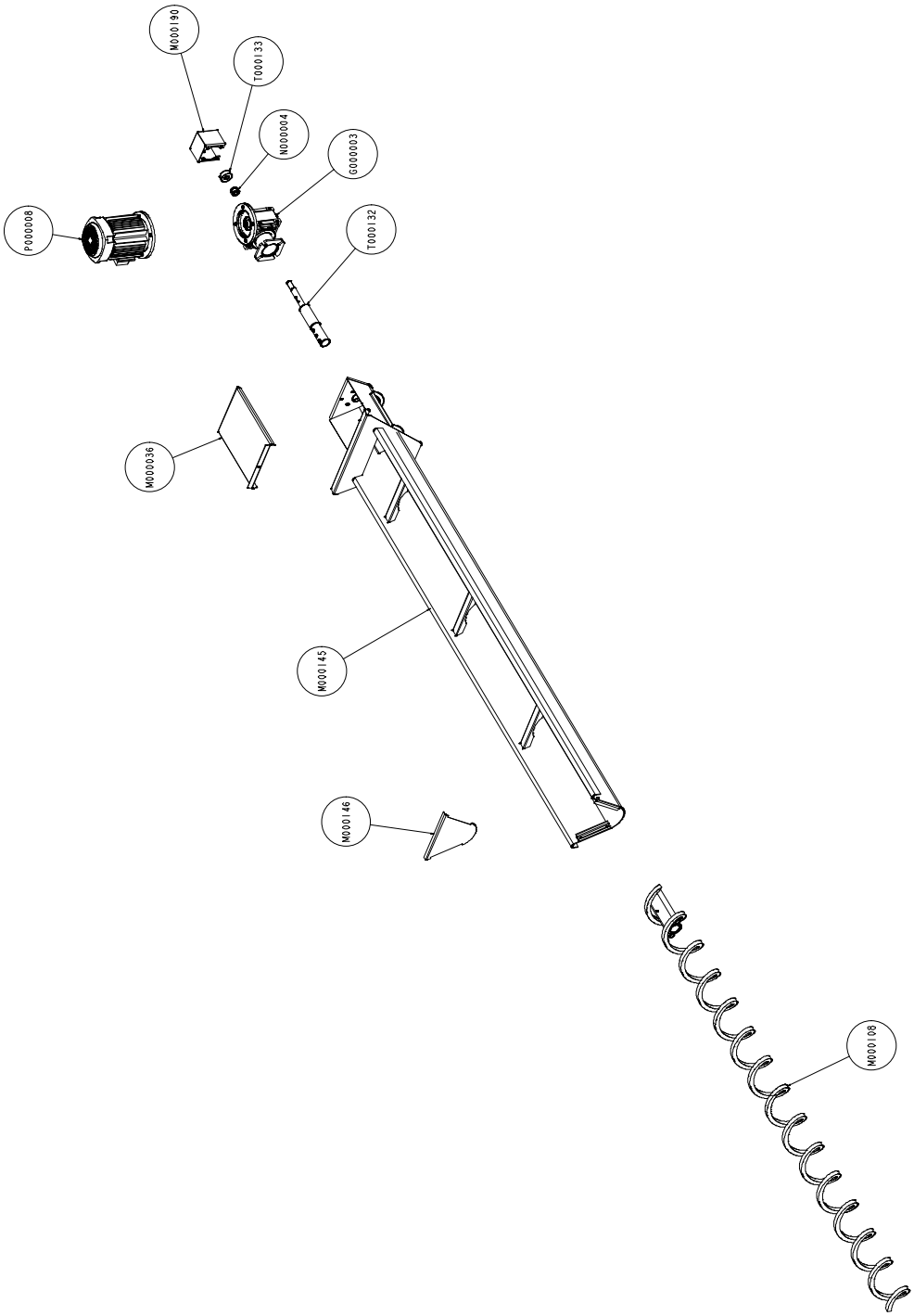

Code	Ref.	Description	Description	Q.ty
	M000145	SUB–ASSEMBLY	CHIP–AUGER–FRAME–H320	1
	G000003	SUB–ASSEMBLY	CHML_40_FB_2_100_63_B5_V5	1
	P000008	PART	MOTORE–C71–B5–CHINA	1
	T000132	PART	H320–CHIP–AUGER–SHAFT	1
010.7233	N000004	PART	DADO–AUTOB–M16	1
	T000133	PART	H320–CHIP–AUGER–WHEEL	1
	M000190	PART	H320–CHIP–AUGER–PHONIC–COVER	1
	M000036	PART	CHIP–AUGER–FRAME–H320–8	1

Vertical rollers

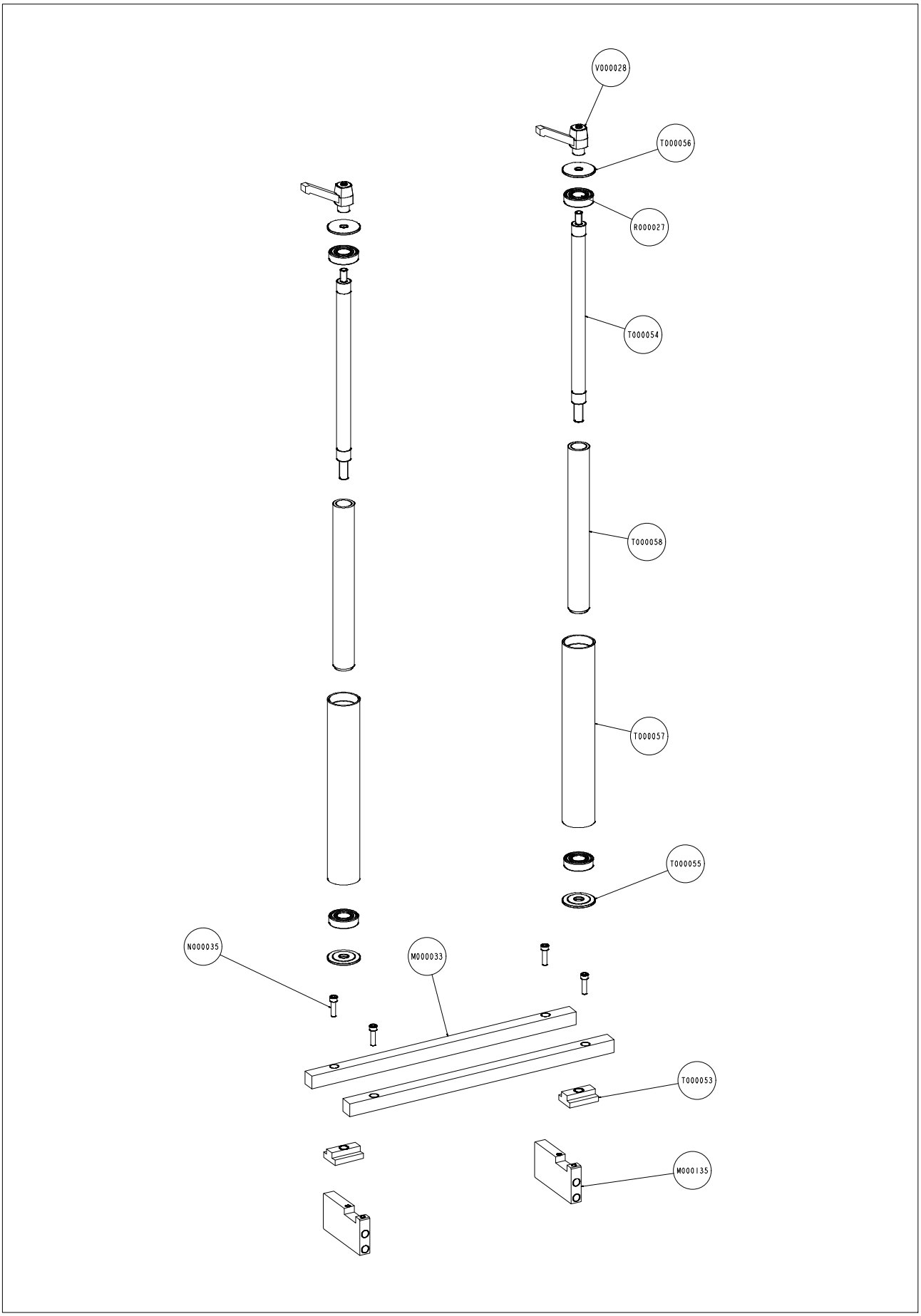

Code	Ref.	Description	Description	Q.ty
	M000135	PART	VERTICAL-ROLLERS-BRACKET-H320	2
	M000033	PART	VERTICAL-ROLLERS-SLID-BAR-H320	2
007.5062	T000053	PART	TASS-FIX-RUL-VERT-TR400	2
034.1003	V000028	PART	LEVA-SCATTO-M12	2
010.7895	N000035	PART	M8X30-TCEI	4
	T000054	PART	PERNO-X-RUL-VERT-H11	1
	T000056	PART	ROND-SUP-RULLO-VERT-H11	1
	T000057	PART	TUB-ESTERNO-RUL-VERT-H11	1
025.0055	R000027	PART	6205-2Z	2
	T000058	PART	DISTANZIALE-RUL-VERT-H11	1

Adjustments

7

This chapter describes the operations required to adjust the electronic, mechanical and the hydraulic systems. By following these instructions, you can “customise” your machine to suit the type of cut required, thereby optimising cutting times.

Displaying and editing the set–up parameters

The machine set–up parameters may be programmed directly from the control console.

▶ Power the machine by turning the main switch on the left of the control board.

▶ Tap on the box on the touchscreen shown in the figure.

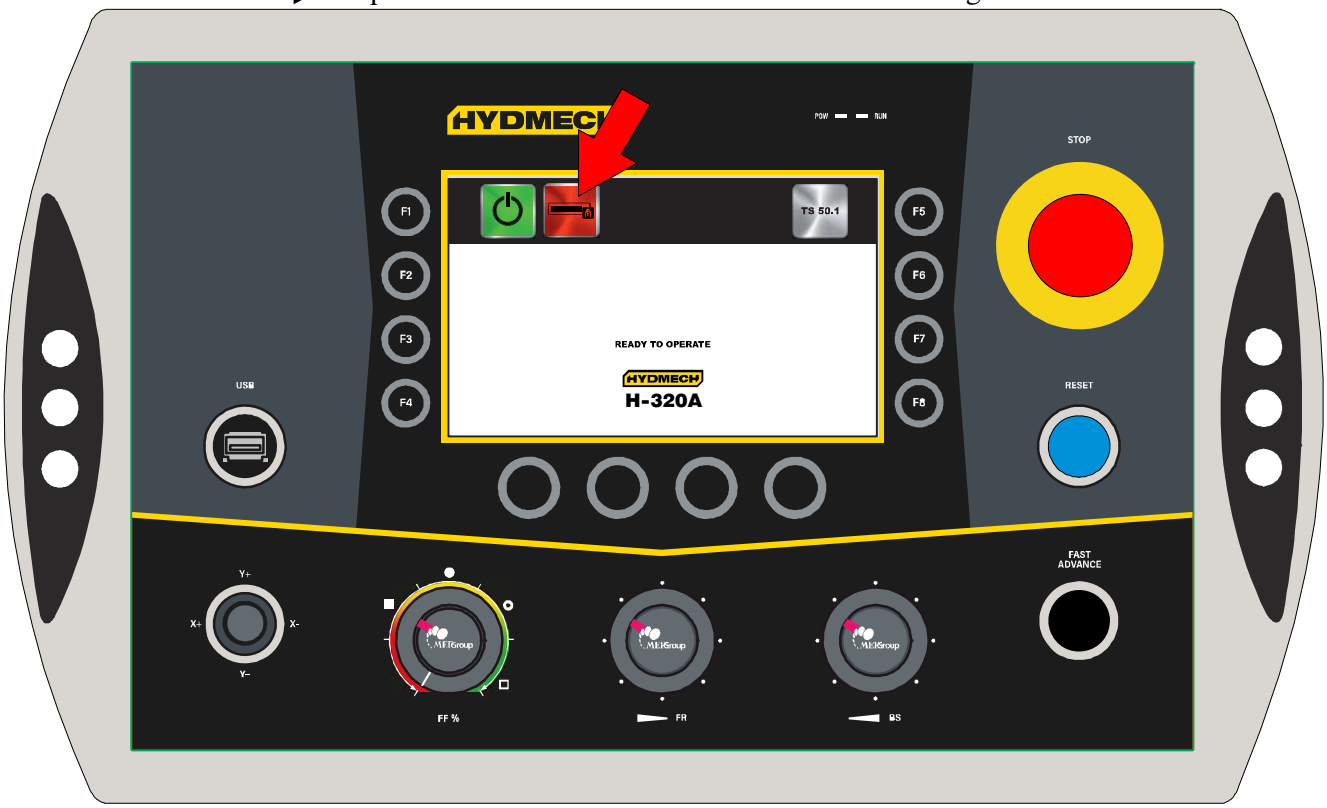

▶ The password entry box will open. Tap the box to open the keypad. Enter 734533.

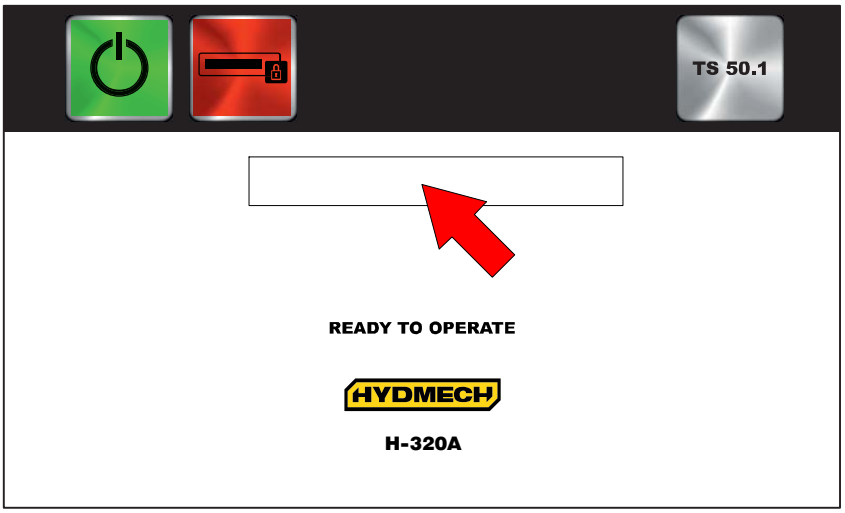

▶ Tap on the box shown in the figure.

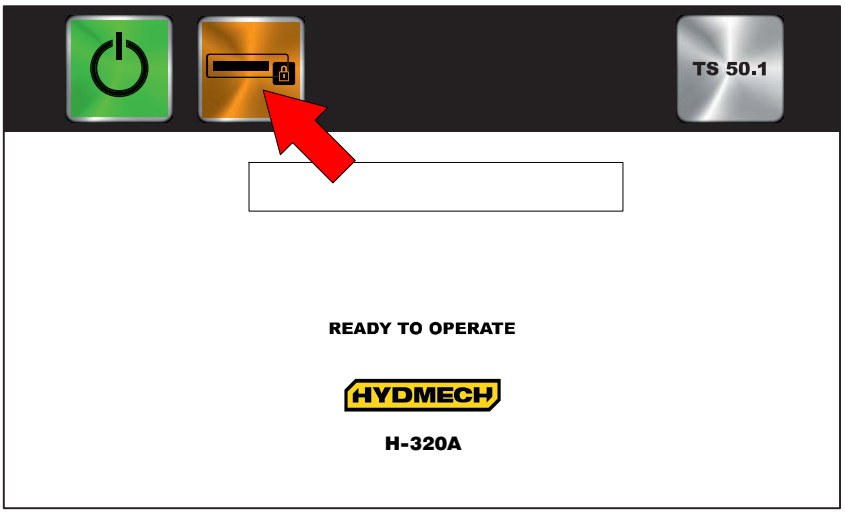

▶ Tap on the box shown in the figure.

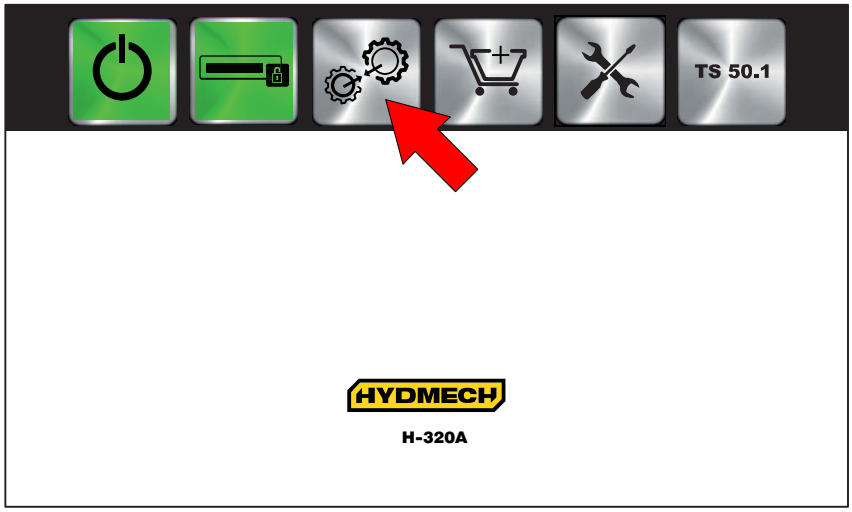

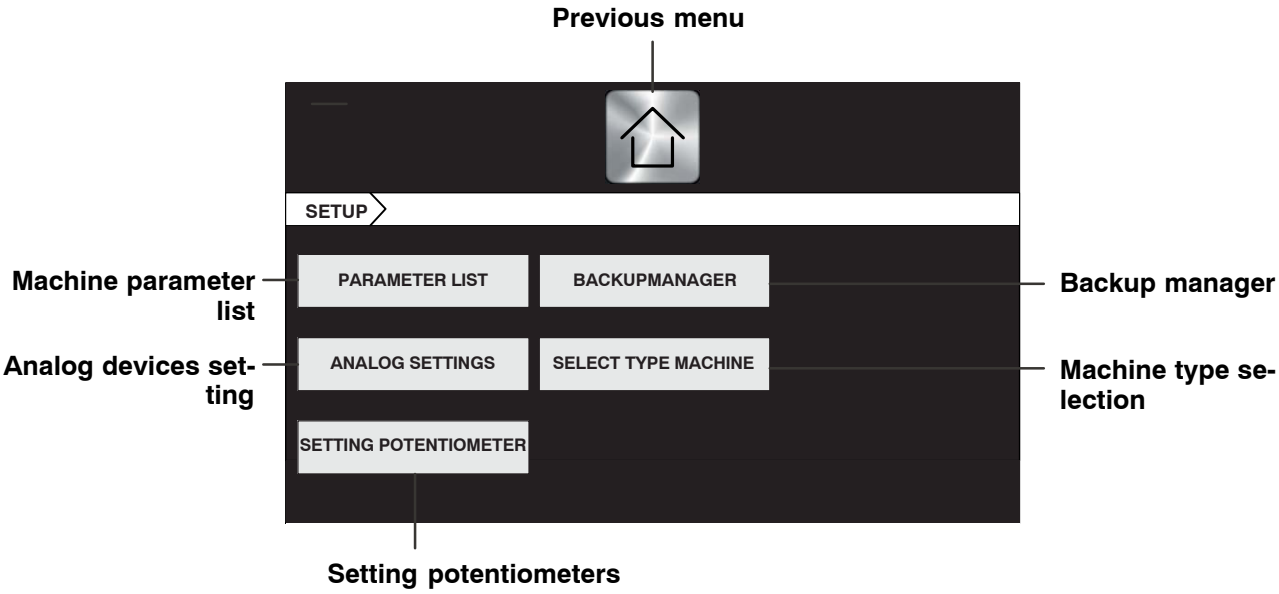

Parameter List

▶ Once inside the “Parameter List” menu, use the following three keys to navigate through the different menu screens:

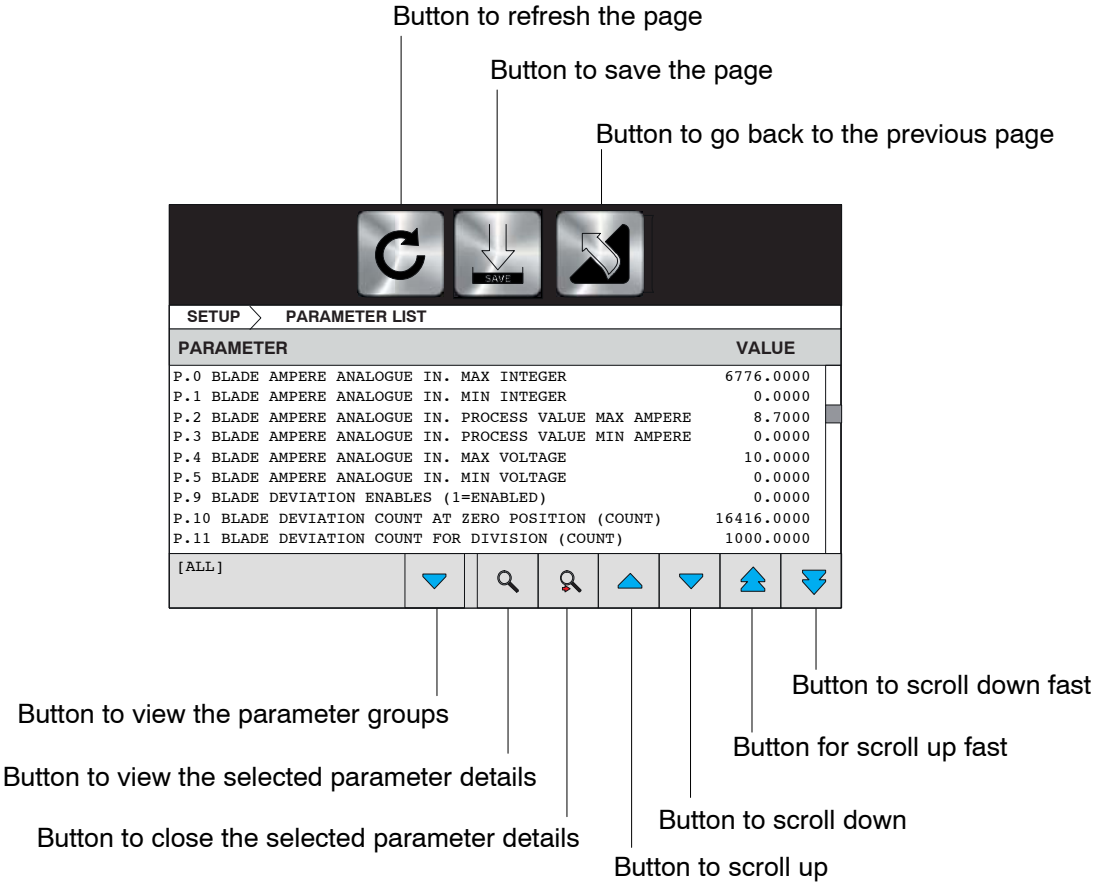

The machine setup parameters divided by topic are shown below.

Blade Motor		
Nr.	**Parameter / Description**	**Value**
P.0	**BLADE AMPERE ANALOGUE IN. MAX INTEGER** Analogue input counter value corresponding to the maximum ampere.	6776,0000
P.1	**BLADE AMPERE ANALOGUE IN. MIN INTEGER** Analogue input counter value corresponding to the minimum ampere.	0,0000
P.2	**BLADE AMPERE ANALOGUE IN. PROCESS VALUE MAX AMPERE** Ampere corresponding to maximum analogue input value.	8.7000
P.3	**BLADE AMPERE ANALOG IN. PROCESS VALUE MIN AMPERE** Ampere corresponding to minimum analogue input value.	0.0000
P.4	**BLADE AMPERE ANALOGUE IN. MAX VOLTAGE** Voltage corresponding to maximum analogue input value.	10.0000
P.5	**BLADE AMPERE ANALOGUE IN. MAX VOLTAGE** Voltage corresponding to minimum analogue input value.	0.0000
P.23	**BLADE AMPERE CONTROL CHECK TIME PERIOD SEC** Control execution time (sec).	0.1500
P.24	**BLADE AMPERE CONTROL BEFORE ENABLING ON DELAY SEC** Activation delay in seconds (if 0 is off).	3.0000
P.25	**BLADE AMPERE CONTROL FEED REDUCTION STEP M/MIN** Correction step.	82.0209
P.26	**BLADE AMPERE CONTROL MAX ALLOWED AMPERE** Maximum allowed current.	14.0000

Blade Motor		
P.27	**BLADE AMPERE CONTROL MAX AMPERE ALARM ON DELAY SEC** Alarm time for reaching the motor max. current (sec).	1.0000
P.29	**BLADE SPEED CONTROL MAX ALLOWED M/MIN** Speed set point maximum value S.	377.2965
P.30	**BLADE SPEED CONTROL MIN ALLOWED M/MIN** Speed set point minimum value S.	49.2125
P.31	**BLADE SPEED CONTROL AN IN. MAX INTEGER VALUE** Speed reference maximum value (analogue input maximum value).	32767.0000
P.32	**BLADE SPEED CONTROL AN IN. MIN INTEGER VALUE** Speed reference minimum value (analogue input minimum value).	0.0000
P.33	**BLADE SPEED CONTROL BEFORE STOPPING ON DELAY SEC** Stop delay for cleaning cut (sec).	1.0000
P.34	**BLADE SPEED ENCODER COUNTING DIRECTION INVERTING** Blade speed encoder counter inversion.	1.0000
P.35	**BLADE SPEED ENCODER MAX COUNTER VALUE M/MIN** Blade speed maximum value.	377.2965
P.36	**BLADE SPEED ENCODER MIN COUNTER VALUE M/MIN** Blade speed minimum value.	49.2125
P.37	**BLADE SPEED ENCODER PULSE SCALING RESOLUTION MM OR INCH** Relationship between impulses and rotation measure.	1.0000
P.97	**BLADE MOTOR STATUS ON MAN CYCLE END MOTOR ON=1.0** Blade motor on time at end of manual cycle.	1.0000
P.113	**CURRENT THRESHOLD FOR MAX FEED CORRECTION (A)** Motor max. absorption value.	3.0000
P.139	**SPEED ENCODER TYPE (0=LINEAR 1=LOGARITHMIC)** Encoder type.	0.0000
P.140	**SPEED ENCODER LOGARITHMIC X1 THRESHOLD (COUNT):** X1 correction factor for managing the head lowering speed encoder in logarithmic mode.	4.0000
P.141	**SPEED ENCODER LOGARITHMIC X2 THRESHOLD (COUNT):** X2 correction factor for managing the head lowering speed encoder in logarithmic mode.	8.0000
P.142	**SPEED ENCODER LOGARITHMIC X1 MULTIPLIER** X1 correction multiplier for managing the head lowering speed encoder in logarithmic mode.	10.0000
P.143	**SPEED ENCODER LOGARITHMIC X2 MULTIPLIER** X2 correction multiplier for managing the head lowering speed encoder in logarithmic mode.	1000.0000

BLADE DEVIATION		
Quantity	**Parameter / Description**	**Value**
P.9	**BLADE DEVIATION ENABLE (1=ENABLED):** Blade deviation enabling	0.0000

BLADE DEVIATION		
P.10	**BLADE DEVIATION COUNT AT ZERO POSITION (COUNT)** Levels at zero blade deviation	16416.0000
P.11	**BLADE DEVIATION COUNT FOR DIVISION (COUNT)** Levels for dividing the blade deviation bar	1000.0000
P.12	**BLADE DEVIATION SCAN TIME (SEC)** Blade deviation reading time	0.5000
P.166	**DISABLE BLADE DEVIATION POSITION (MM OR INCH)**	0.7870
HEAD ENCODER		
Quantity	**Parameter / Description**	**Value**
P.13	**BLADE POSITION ANALOGUE IN. MAX INTEGER** Maximum counter value.	25673.0000
P.14	**BLADE POSITION ANALOGUE IN. MIN INTEGER** Minimum counter value.	1317.0000
P.15	**BLADE POSITION ANALOGUE IN. PROCESS VALUE MAX MM OR INCH** Max. value in mm or inches of the totally up position of the head.	13.1100
P.16	**BLADE POSITION ANALOGUE IN. PROCESS VALUE MIN MM OR INCH** Min. value in mm or inches of the totally down position of the head.	0.0000
P.17	**BLADE POSITION ANALOGUE IN. MAX VOLTAGE VDC** Voltage value corresponding to the totally up position of the head.	8.7000
P.18	**BLADE POSITION ANALOGUE IN. MIN VOLTAGE VDC** Voltage value corresponding to the totally down position of the head.	0.0000
SHUTTLE AXIS		
Quantity	**Parameter / Description**	**Value**
P.43	**BLADE SPEED MONITORING BEFORE ENABLING ON DELAY SEC** Delay in controlling the min. Speed.	8.0000
P.44	**BLADE SPEED MONITORING WHEEL DIAMETER MM OR INCH** Pulley diameter.	18.9370
P.45	**BLADE SPEED MONITORING NUMBER OF PICK–UP PULSES PERIOD** Number of spokes/pulley.	5.0000
P.46	**BLADE SPEED MONITORING WATCH DOG ON DELAY SEC** Delay in controlling single impulses.	0.5000
P.47	**BLADE SPEED MONITORING MIN SPEED WATCH DOG VALUE M/MIN OR FT/MIN** Min. speed in m/min or ft/min.	39.3700
P.116	**X POSITIVE SOFTWARE LIMIT (MM–INCH)** Feeder max. Stroke.	23.0000
P.117	**X NEGATIVE SOFTWARE LIMIT (MM–INCH)** Feeder min. Stroke.	0.0000

SHUTTLE AXIS		
P.118	**X JOYSTICK FEED SLOW (MM/MIN – INCH/MIN)** Slow feeding.	19.6850
P.119	**X JOYSTICK FEED FAST (MM/MIN – INCH/MIN)** Fast feeding.	59.0551
P.120	**OVER STROKE X MM OR INCH** X axis beyond zero mm or inch.	3.1600
P.121	**MICRO ENGAGEMENT SPEED HOME X MM/INCH OR INCH/MIN** Speed of search for microswitch while the trolley is zeroed.	78.7401
P.122	**MICRO DISENGAGEMENT SPEED HOME X MM/INCH OR INCH/MIN** Speed of release from the search while the trolley is zeroed.	11.8110
P.133	**SPEED X ON CYCLE MM/MIN OR INCH/MIN** Feeder speed in cutting cycle.	150.0000
BLADE TENSION		
Quantity	**Parameter / Description**	**Value**
P.48	**BLADE TENSION CONTROL LARGE PULSE WIDTH SEC.**	20.0000
P.49	**BLADE TENSION CONTROL OFF BETWEEN PULSES AWAITING SEC.**	0.7000
P.50	**BLADE TENSION CONTROL SMALL PULSE WIDTH SEC.**	0.0250
P.51	**BLADE TENSION CONTROL MAX ALARM TENSION KN** Maximum voltage allowed to apply adjustment.	4400.0000
P.52	**BLADE TENSION CONTROL MIN ALARM TENSION KN** Minimum voltage allowed to apply adjustment.	1600.0000
P.53	**BLADE TENSION CONTROL ERROR LARGE TO SMALL PULSE**	240.0000
P.54	**BLADE TENSION CONTROL MAX ERROR TOLERANCE KN**	120.0000
P.55	**BLADE TENSION CONTROL MIN ERROR TOLERANCE KN**	–120.0000
P.56	**BLADE TENSION CONTROL SETPOINT KN**	4620.0000
P.57	**BLADE TENSION CONTROL AN. IN. LOAD CELL MAX INTEGER VALUE** Maximum counter value from load cell analogue input.	4969.0000
P.58	**BLADE TENSION CONTROL AN. IN. LOAD CELL MIN INTEGER VALUE** Minimum counter value from load cell analogue input.	15.0000
P.59	**BLADE TENSION CONTROL AN. IN. LOAD CELL PROCESS VALUE MAX** Load cell analogue input maximum value allowed for acquisition.	2310.0000
P.60	**BLADE TENSION CONTROL AN. IN. LOAD CELL PROCESS VALUE MIN** Load cell analogue input minimum value allowed for acquisition.	0.0000
P.61	**BLADE TENSION CONTROL ENABLING =1.0** Automatic blade tension adjustment enable	1.0000

BLADE TENSION		
P.62	**BLADE TENSION CONTROL AN. IN. LOAD CELL VOLTAGE VALUE MAX** Load cell analogue input voltage maximum value.	10.0000
P.63	**BLADE TENSION CONTROL AN. IN. LOAD CELL VOLTAGE VALUE MIN** Load cell analogue input voltage minimum value.	0.0000
CLAMPS ENCODER:		
Quantity	**Parameter / Description**	**Value**
P.64	**CLAMPS LOCKING STATUS RISES AFTER SPECIFIED SEC FROM COMMAND**	1.5000
P.65	**CLAMPS UNLOCKING STATUS RISES AFTER SPECIFIED SEC FROM COMMAND**	1.0000
P.148	**VICE OPENING TIME WITH MANUAL COMMAND (SEC)**	3.0000
P.162	**TIME SHUTTLE VISE POSITION SETTING (SHORT REMNANT) (SEC)**	9.0000
P.164	**OPENING TIME SHUTTLE VISE FOR SHORT REMNANT (SEC)**	0.5000
P.165	**INTERFERENCE SHUTTLE VISE (MM OR INCH)**	3.5000
CUT HEAD		
Quantity	**Parameter / Description**	**Value**
P.67	**FEED ENCODER COUNTING DIRECTION INVERTING =1.0** Enables the reversal of the reading for the F value scale.	0.0000
P.68	**FEED ENCODER MAX COUNTER VALUE MM/MIN OR INCH/MIN** Max. speed that can be set by encoder F.	20.0000
P.69	**FEED ENCODER MIN COUNTER VALUE MM/MIN OR INCH/MIN** Min. speed that can be set by encoder F.	0.0000
P.70	**FEED ENCODER PULSE SCALING RESOLUTION MM OR INCH/ PULSE** Relationship between impulse and supply measure.	0.1000
P.75	**FEED ENCODER COUNTER RETENTION ENABLING = 1.0**	1.0000
P.82	**U Y FEED AXIS FULL STROKE WIDTH MM OR INCH** U axis maximum stroke (mm or inch).	300.0000
P.86	**Y CUTTING AXIS MAXIMUM POSITION MM OR INCH** Y axis maximum limit switch (mm or inch).	13.0000
P.87	**Y CUTTING AXIS MINIMUM POSITION MM OR INCH** Y axis minimum limit switch (mm or inch).	0.0200
P.89	**Y CUTTING AXIS AUTO CYCLING SLOW DOWN FROM TARGET MM OR INCH** Deceleration space (mm or inch): distance from target position at which slow descent is set.	0.4000
P.90	**Y CUTTING AXIS CUTTING FEED PID CONTROL ERROR MM OR INCH** Check of the head advancing tolerance.	0.1969

CUT HEAD		
P.92	**Y CUTTING AXIS MODE DOWNGOING FEED MM/MIN OR INCH/ MIN** Slow Y position speed (mm/min or inch/min).	78.7401
P.93	**Y CUTTING AXIS AUTO CYCLING SLOW DOWN FEED MM/MIN OR INCH/MIN** Slow Y position speed (mm/min or inch/min).	15.0000
P.94	**Y CUTTING AXIS ALL MODES UPGOING FEED MM/MIN OR INCH MIN** Y upward speed (mm/min or inch/min).	122.0473
P.95	**Y CUTTING AXIS U OPENING @Y FFED CURVE BYPASS = 1.0**	0.0000
P.113	**Y CUTTING AXIS CUTTING FEED PID CONTROL INCREASE CORRECTION (DEGREE)** F correction factor.	1.5000
P.114	**Y CUTTING AXIS CUTTING FEED PID CONTROL TIME (SEC)** Time between one correction and the next.	0.1000
P.123	**H ENCODER MAX COUNTER VALUE (%)** Max. displayed value of H.	100.0000
P.124	**H ENCODER MIN COUNTER VALUE (%)** Min. displayed value of H.	0.0000
P.125	**H POTENTIOMETER ANALOGUE INPUT FS MAX** Max. levels of the H potentiometer.	32765.0000
P.126	**H POTENTIOMETER ANALOGUE INPUT FS MIN** Min. levels of the H potentiometer.	3.0000
P.127	**FEED FORCE CURRENT CONTROL MAX (AMPERE)** Max. set current of blade motor.	12.0000
P.128	**FEED FORCE CURRENT CONTROL MIN(AMPERE)** Max. set current of blade motor.	9.0000
P.130	**Y JOYSTICK FEED SLOW (MM/MIN OR INCH/MIN)** Slow manual head lowering.	33.4646
P.131	**Y JOYSTICK FEED FAST (MM/MIN OR INCH/MIN)** Fast manual head lowering.	80.0000
P.132	**OFFSET FCTI MM OR INCH** Offset for rear head limit switch.	0.0000
P.134	**FEED ENCODER TYPE (0=LINEAR 1=LOGARITHMIC):** Setting the encoder feeding as linear or logarithmic (0 = linear; 1 = logarithmic).	0.0000
P.135	**FEED ENCODER LOGARITHMIC X1 THRESHOLD (COUNT):** X1 correction factor for managing the head lowering speed encoder in logarithmic mode.	4.0000
P.136	**FEED ENCODER LOGARITHMIC X2 THRESHOLD (COUNT)** X2 correction factor for managing the head lowering speed encoder in logarithmic mode.	0.0000
P.137	**FEED ENCODER LOGARITHMIC X1 MULTIPLIER** X1 correction multiplier for managing the head lowering speed encoder in logarithmic mode.	1000.0000

CUT HEAD		
P.138	**FEED ENCODER LOGARITHMIC X2 MULTIPLIER** X2 correction multiplier for managing the head lowering speed encoder in logarithmic mode.	0.0000
P.171	**Y FEED DISPLAYED FILTER (MM OR INCH)**	0.1969
OPTIONAL:		
Quantity	**Parameter / Description**	**Value**
P.78	**MINIMAL LUBRIFICATION ENABLING (1=ENABLING)** Minimum lubrication enable	1.0000
P.103	**Y RISE UP ON MANUAL CYCLE (1=ENABLED)** Y axis upward stroke enabled at end of manual cycle (1=enabled; 0=disabled). Y axis returns to RHLS at the end of the manual cycle	1.0000
P.104	**ENABLE BLADE MINIMUM SPEED CONTROL (1=ENABLED)** Enabling the blade speed control	0.0000
P.105	**CHIP CONVEYOR ENABLING (1=ENABLED)** Chip conveyor enabling	1.0000
P.129	**TYPE OF BLADE TENSIONING (2=ELECTROMECHANIC; 1=HYDRAULIC; 0=MANUAL)** Setting the type blade tensioning	1.0000
P.144	**OPEN FRONT VISE AT MANUAL CYCLE END (1=FCTI; 2=FCTA; 0=NEVER)** Setting the type blade tensioning	1.0000
P.161	**TYPE CHIP CONVEYOR (0=MICRO; 1=PHONIC WHEEL)**	1.0000
P.163	**BLADE CHAMBER CUT OFFSET (MM OR INCH)** feeder movement measurement for the passage of the blade during the rising of the head.	0.0800
P.167	**MANAGE CLOSING VISE IN MANUAL MODE (0=PULSE; 1=LEVEL)**	1.0000
P.168	REMOTE PUSHBUTTON (0=NOT PRESENT; 1=CANOPEN; 2=ETHERNET)	0.0000
P.169	**PUSH BUTTON ENABLE VISES IN MAN. PRESENT (1=YES; 0=NO)**	1.0000
P.170	**TIMEOUT ENABLE VISE BUTTON PRESSED (SEC)**	16.0000
P.END	**ENABLING DEBUG VIEW (1=ENABLED)** debug procedure enablement.	0.0000
VORIOUS		
Quantity	**Parameter / Description**	**Value**
P.80	**MKS IMPERIAL UNIT SYSTEM SWITCHOVER ENABLING: IMPERIAL=1; MKS=0** Imperial = 0.0: sets measuring system MKS (0) or IMPERIAL (1).	0.0000
P.101	**TYPE MACHINE (0=H14–A; 1=H11–A; 2=H230–A):** Defines the machine type (set automatically by loading the machine .cns file).	2.0000
P.146	**TYPE LOGO (0=HYDMECH; 1=ZEPH; 2=S&F)**	0.0000
TIMER		

TIMER		
Quantity	**Parameter / Description**	**Value**
P.96	**HYDRAULIC PUMP OFF DELAY AWAITED BEFORE STOPPING SEC** Hydraulic pump off delay before stopping (seconds).	50.0000
P.107	**CHIP CONVEYOR TIME ON IN AUTO (MIN)**	1.0000
P.108	**CHIP CONVEYOR TIME OFF IN AUTO (MIN)**	0.5000
P.151	**PERIOD MICRO CHIP CONVEYOR (SEC) (PHONIC WHEEL)** Time for chip ejector jammed alarm.	15.0000
PASSWORD		
Quantity	**Parameter / Description**	**Value**
P.99	**USER PASSWORD VALUE:** Password value setting.	7210721.0000

Analog Settings

On page 2 of the Setup section, you can calibrate the cutting head devices: Y shaft potentiometer, blade load cell and blade motor absorption.

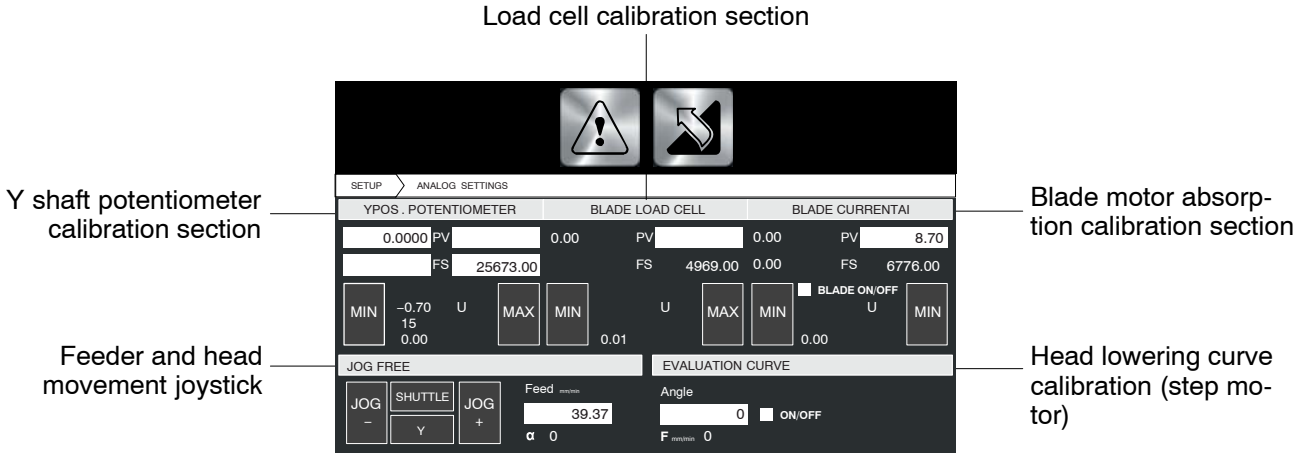

Potentiometer settings

On page 3 of the Setup section, you can calibrate the blade H absorption potentiometer, calibrate the encoders: F (Feed) for head lowering adjustment

and S (Speed) for blade rotation speed adjustment and the blade deviation device.

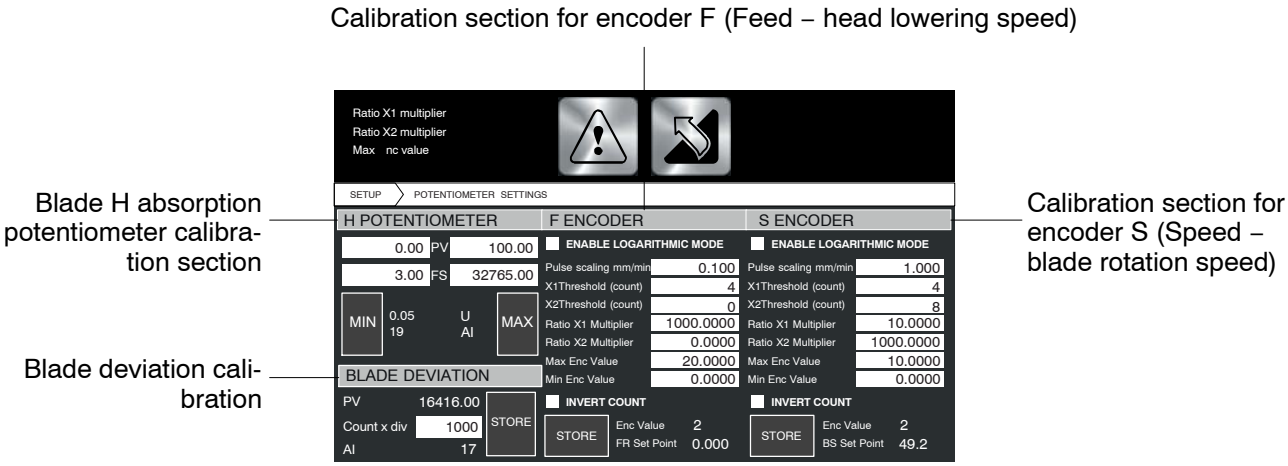

Backup manager

On page 4 of the Setup section, you can manage the control memory data by saving it (backup) or resetting it (restore) on a USB storage device.

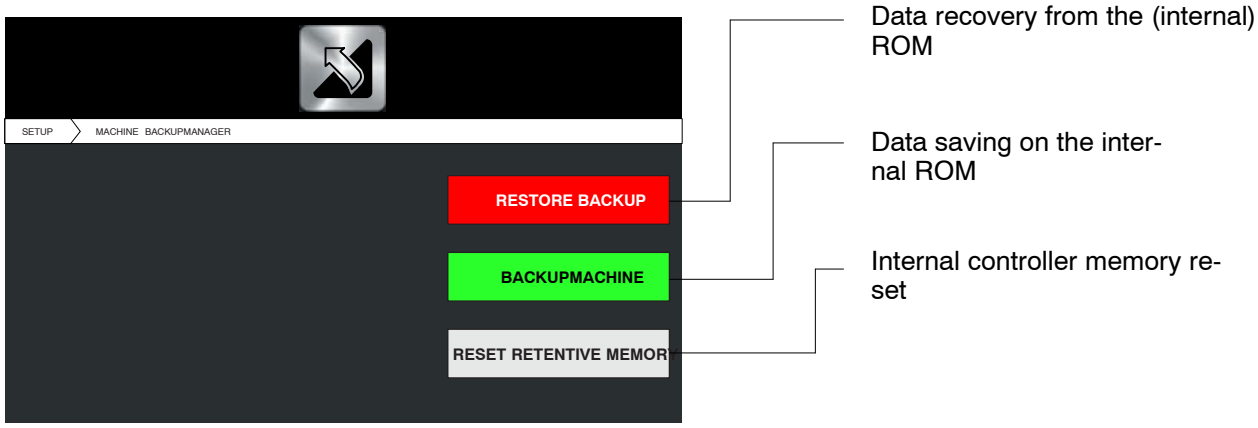

Machine type selection

On page 5 of the Setup section, you can choose the model of the sawing machine, each one customised with its own parameters.

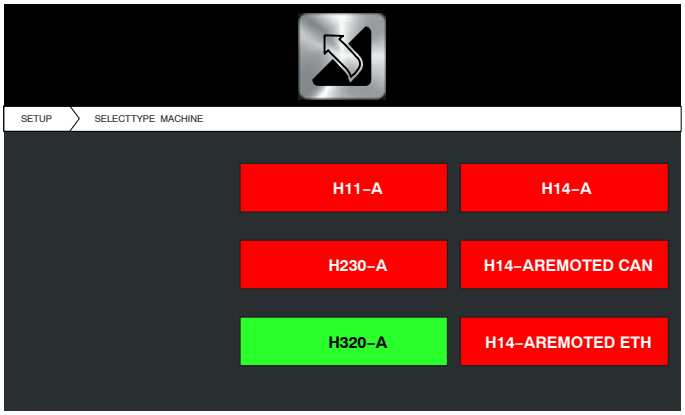

Machine working pressures

This section describes the procedures to change the vice and head operating pressures. Both adjustments strongly depend on the material type being processed.
The vice locking pressure can be set if the material could be strained or could be quite unstable while cutting.
The head lowering speed can be set by a flow adjuster on the control console.

Machine working pressures

This section describes the procedures for vice tightening pressures by operating on the hydraulic power pack.

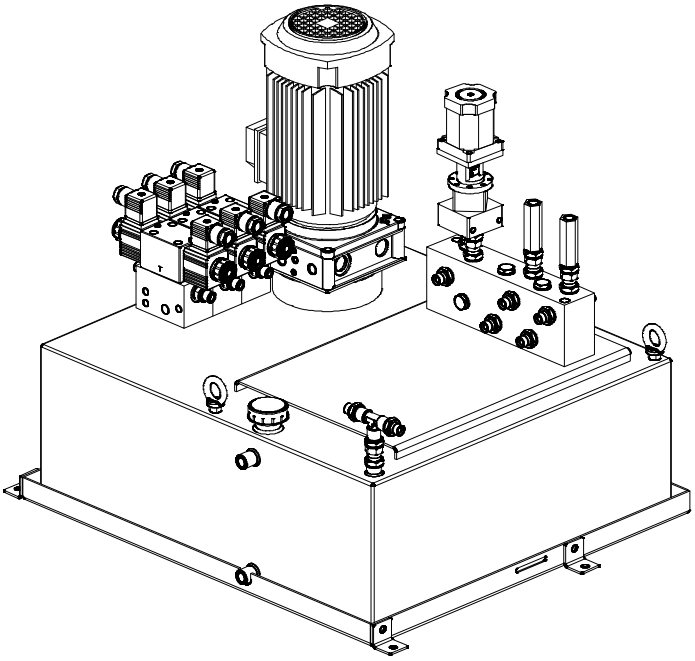

N.B. The vice working pressure is tightly bound to the type of material being worked and can be set if the material could be deformed or results unstable during cutting.
Both pressures can be adjusted by intervening on the relief valves of the power pack as indicated in the procedure described here below.

▶ Loosen the hex locknut on the maximum pressure regulator valve and using a socket wrench increase (clockwise or decrease (anti–clockwise) thepressure displayed on the pressure gauge.

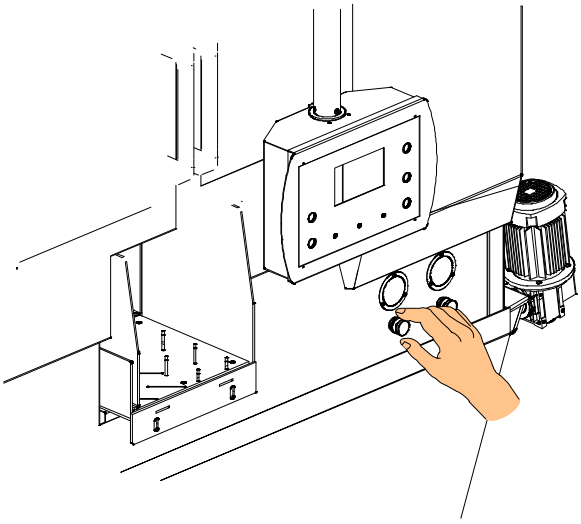

▶ This done, tighten the lock nut and return the hydraulic power pack back inside the base.

Warning The power pack pressure gauges are installed on the delivery only; thus, to display the pressure on the return an additional pressure gauge must be connected in the monitoring fitting.

Cutting head

Blade tensioner slide play adjustment

To reduce the play which may develop over time between the blade tensioner slide and slide gibs, adjust the grub screws between the gibs and slide as follows:

▶ Take the head completely up to the mechanical stop.

▶ Press the key indicated in figure F5 (its box lights up), to activate the Blade Change Mode. The keys for tensioning and detensioning the band F6–F7 are thus activated.

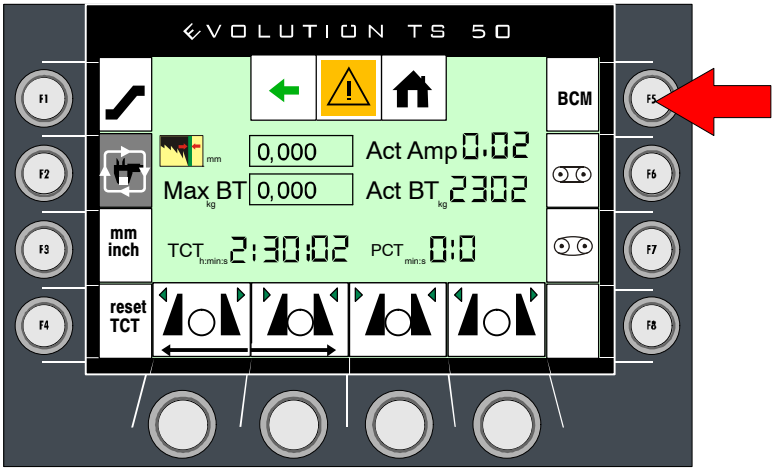

▶ Then press the band detensioning key (F7).

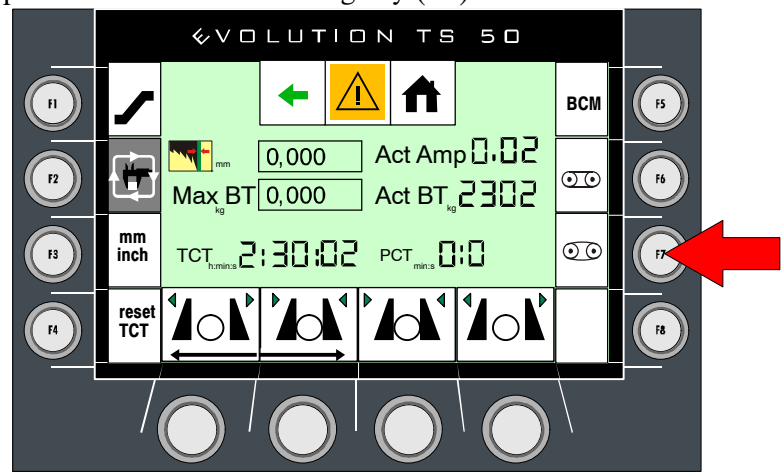

▶ Cut the machine off.

▶ Open the front protection cover.

▶ Remove the blade from the flywheels;

▶ Remove the left side protection by removing the screws shown in the figure to access the blade–tensioning slide on the back of the cutting bow.

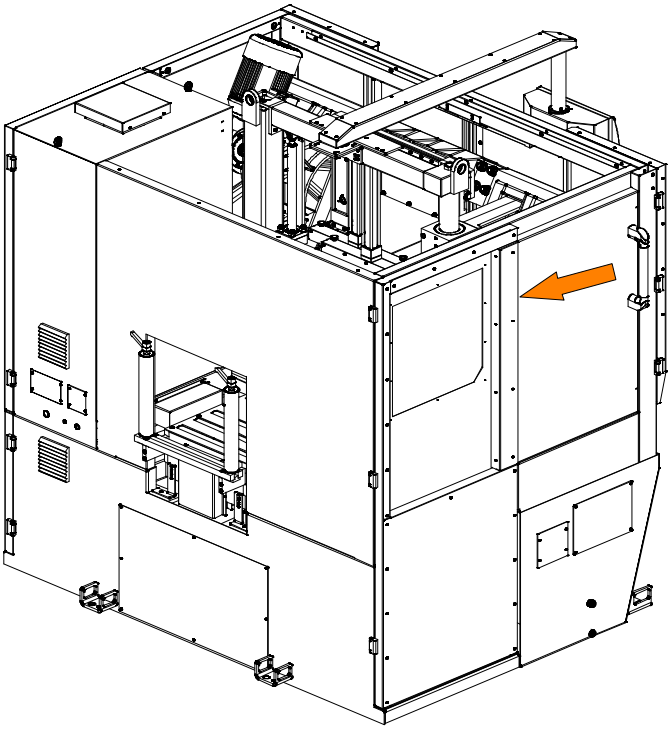

▶ remove the plug connecting the slideway to the cylinder rod;

▶ Move the slide back and forwards to locate any friction or excessive play;

▶ Slacken the nuts, using a tubular nut driver to hold the grub screws firm;

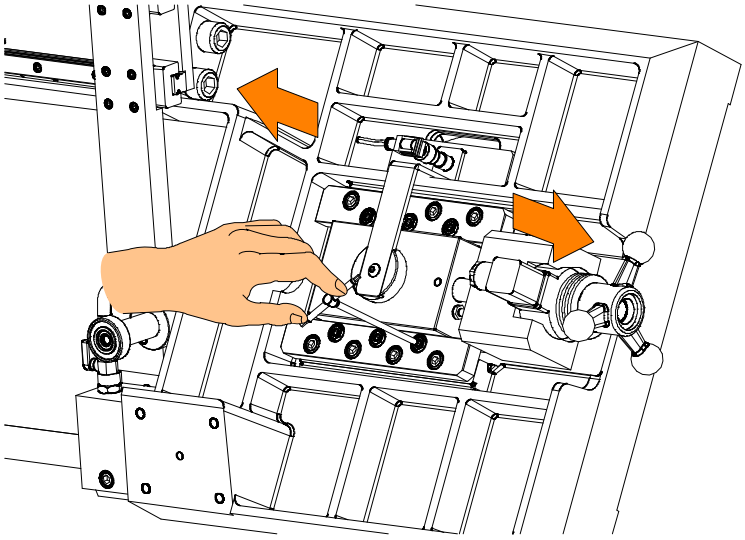

▶ Finally, tighten the grub screws to take up any play or otherwise, slacken them to reduce any friction.

Cutting head stroke

The stroke of the operating head during the cutting cycle depends on the RHLS (rear head limit switch) and FHLS (forward head limit switch) points set electronically from the control console. The operating head is anyway equipped with a mechanical limit switch determining the stroke lower limit:

▶ To adjust this stop, use two hex wrenches, one to lock the nut and the other to tighten or slacken the stop screw.

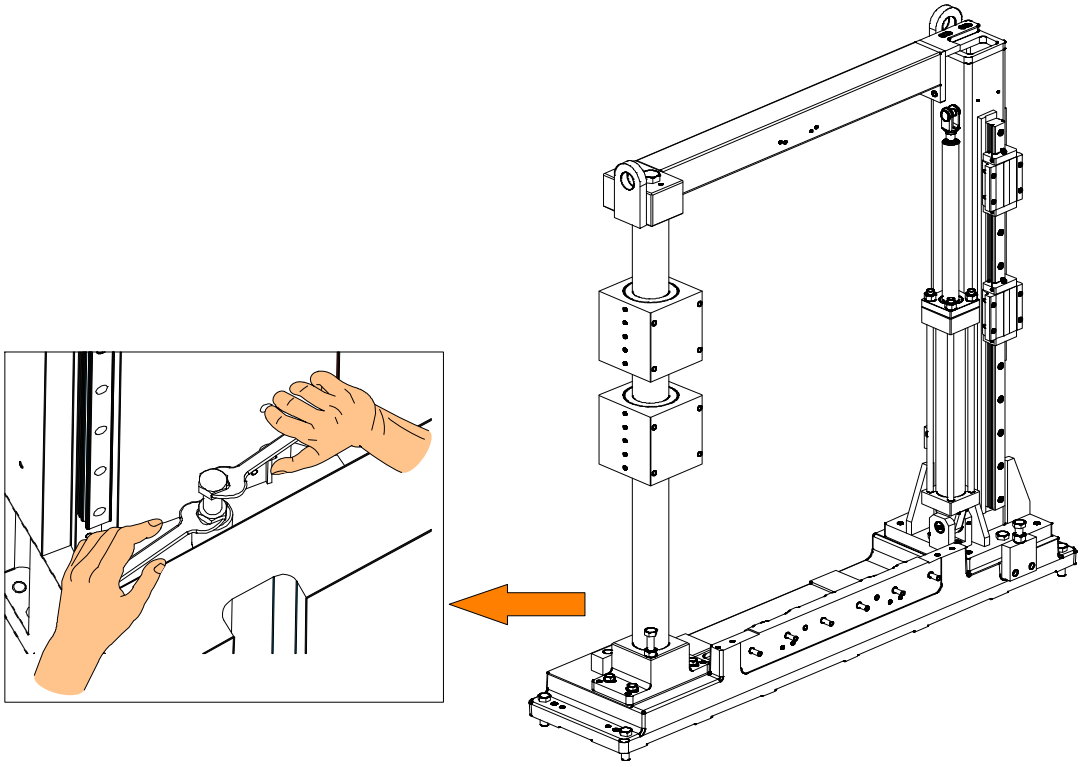

Blade guide components

Band saw blades offer enormous advantages to cutting applications, without requiring any special skills by the operator. A description follows of the blade guide adjustments required to ensure correct operation of the saw.

Blade guide heads

The first blade adjustment involves adjustment of the heads. The blade guide heads comprise the blade guide plates which ensure correct longitudinal alignment, the blade steady buttons which control vertical blade flexure and the coolant delivery cocks.

Blade–pressing tang

The blade–pressing tang prevents the blade from bending upwards due to the vertical component of the cutting force. This device is a component of the front and rear heads and needs no adjustment.

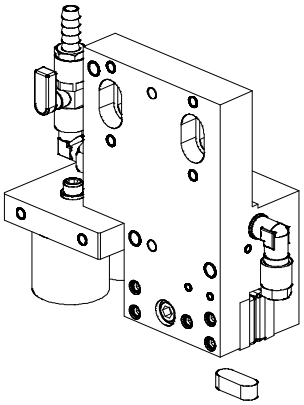

Blade guide plates

The plate contact points feature widia inserts which guide the blade longitudinally. A small amount of play must exist between the plates and blade to ensure that the blade runs smoothly and perpendicular to the work table.

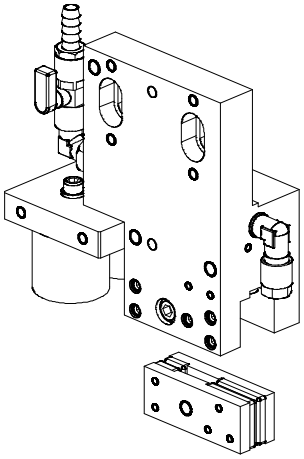

Thanks to the widia inserts, the working life of the guide plates is practically the same as that of the machine itself. However, if due to wear or the assembly of a new blade with a different thickness, the following adjustments must be made:

- ▶ Take the head completely up to the mechanical stop.
- ▶ Detensionare the tape as explained in the previous section.
- ▶ Open the front protection cover.
- ▶ Cut the machine off.
- ▶ Wear protective gloves when changing the blade;
- ▶ Make sure there is a small amount of play between the blade and guide plate inserts.

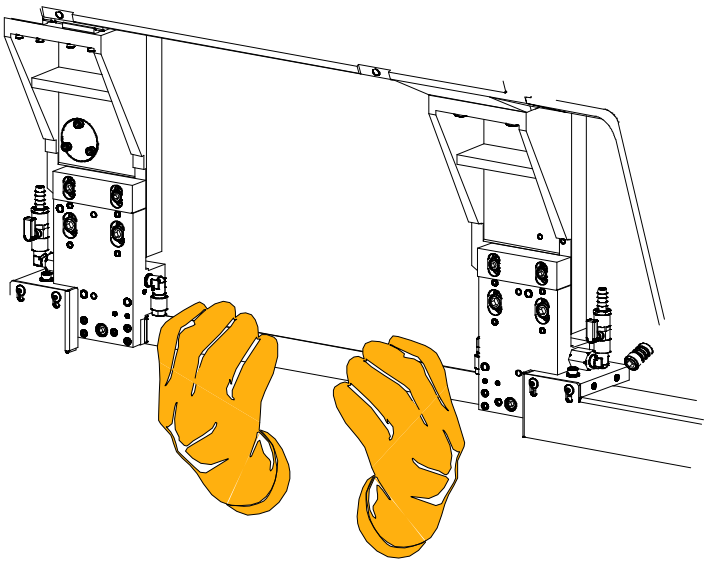

▶ Remove the blade protections from the heads by loosening the fastening screws.

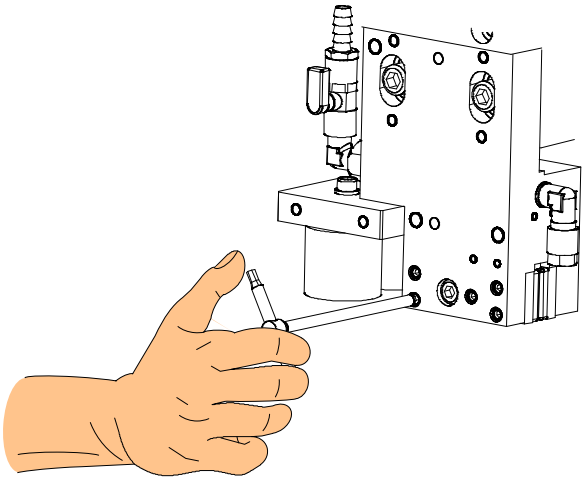

▶ If the amount of play is not sufficient for the blade to run smoothly, adjust the locking torque of the two grub screws with a hex wrench.

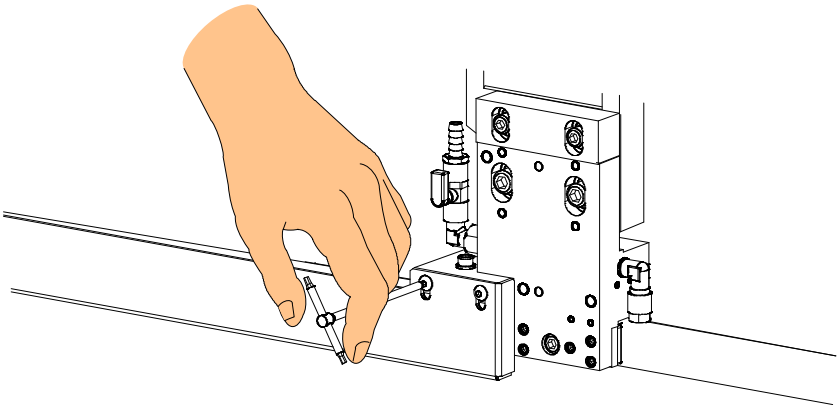

▶ Replace any worn plates by replacing the plate fixing screw.

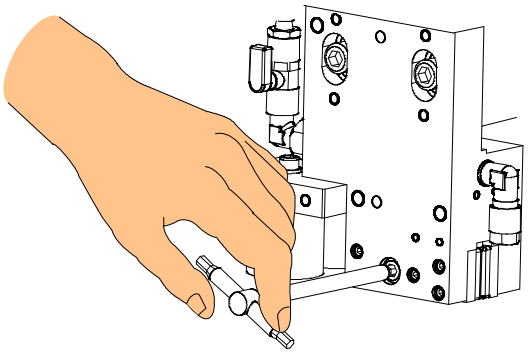

▶ Repeat the above sequence on the front blade guide head;

▶ Restore the blade protections of the front and rear heads.

▶ Close the blade cover and power the machine again.

Blade

The adjustments required to ensure correct operation of the blade are described below. For further information regarding band saw blades, refer to Chapter 9 which provides a more detailed description of the different types of blade.

Tool changeover

Optimum working conditions both enhance operator safety and extend the tool service life. The cutting tool should in any case be replaced when poor cutting

performance starts to affect productivity. The tool changeover procedure is described as follows:

- ▶ Take the head completely up to the mechanical stop.
- ▶ De–tension the band as explained in the previous section.
- ▶ open the front protection cover.
- ▶ Cut the machine off.
- ▶ Wear protective gloves when changing the blade;
- ▶ move the blade cleaning brush away by loosening the screws and pulling it outwards;

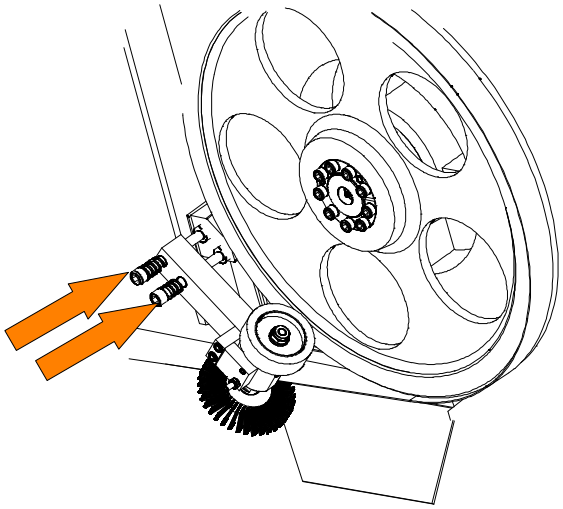

- ▶ remove the blade protections from the heads by loosening the fastening screws.

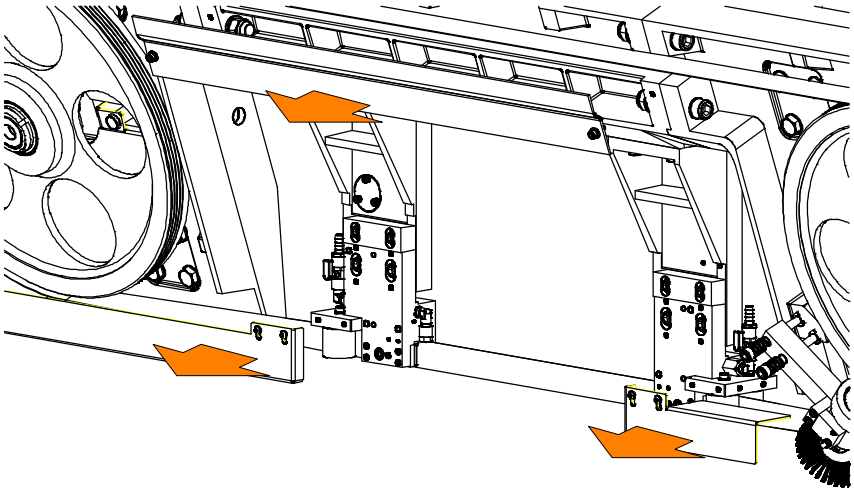

▶ Remove the worn blade by sliding it off the flywheels and front and rear heads;

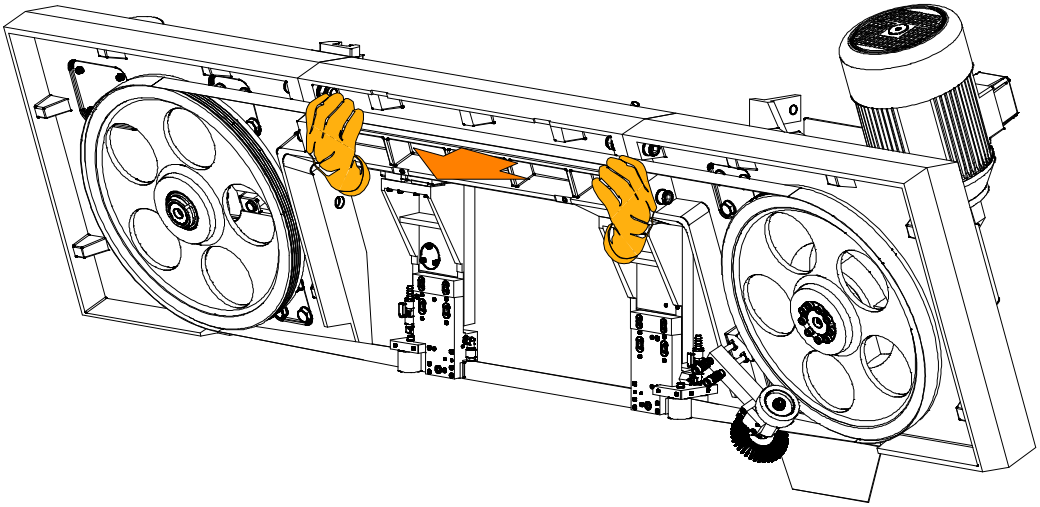

▶ fit the new blade into the blade guide heads and make sure there is a minimum amount of play between the blade and the plates;

▶ restore the blade protections of the front and rear heads and position again the blade–cleaning brush correctly.

▶ Close the blade cover and power the machine again.

Blade perpendicularity

The perpendicularity of the blade to the work surface plus the blade tension are vital for achieving straight cuts. This adjustment is carried out with the help of a goniometer and a workshop square which should be placed adjacent to the blade resting on the work surface.

▶ Open the cutting vice;

▶ position the head so that the band is above the vice jaws;

▶ position the square on the well cleaned reference plane and rest it on the blade, close to the movable vice square and head, in a position where teeth do not hinder the contact.

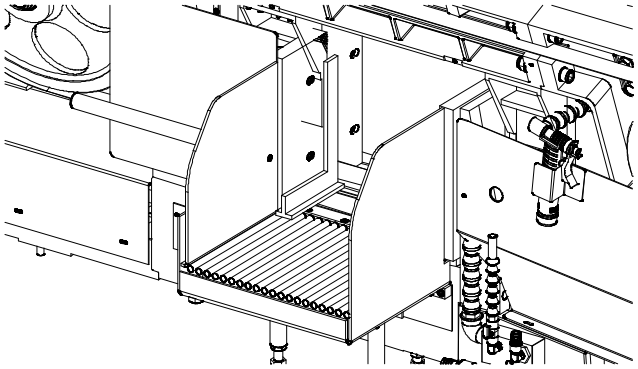

▶ If the band has the contact point in the upper part of the square: loosen the socket head screws (A and A') fastening the head, loosen the two dowels (B' and B') and tighten the two dowels (B and B). If instead the contact point is in the lower part,

loosen the socket head screws (A and A’), loosen the two dowels (B and B) and tighten the dowels (B’ and B’) until the band is perpendicular to the square.

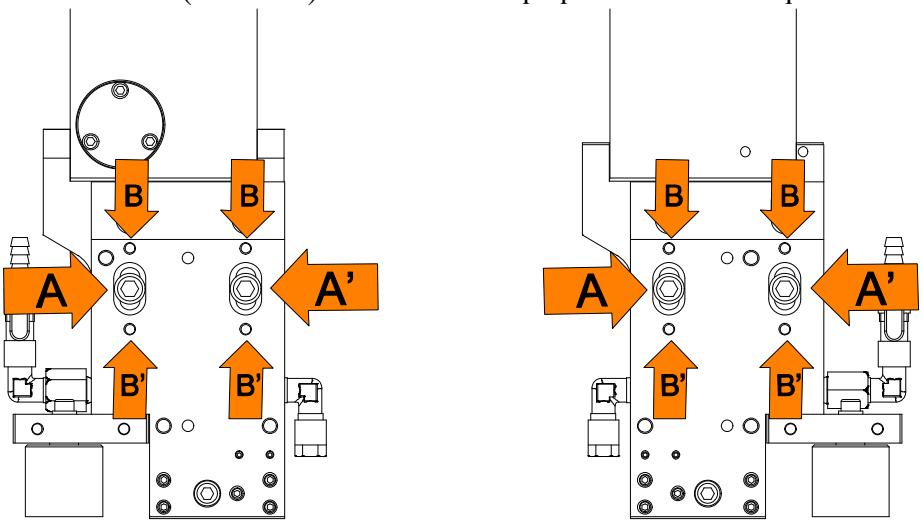

▶ Position the square on the working table close to the fixed vice square and head.

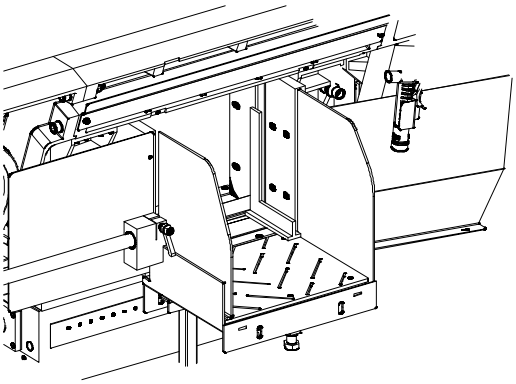

▶ Repeat the squaring operations as for the rear head.

Rotation axis control

Pulleys must be adjusted in their coplanarity. The adjustment is aimed at ensuring the belt rotation, keeping approx. 6 mm of distance from the point of the belt teeth to the pulley machined surface. This prevents an early wear of the belt.

▶ De–tension the band and remove the blade protection;
▶ slacken the grub screw and, using a mallet, tap the shaft in or out;
▶ Position again the blade protection and make the blade turn;
▶ check the distance, as shown in the picture;

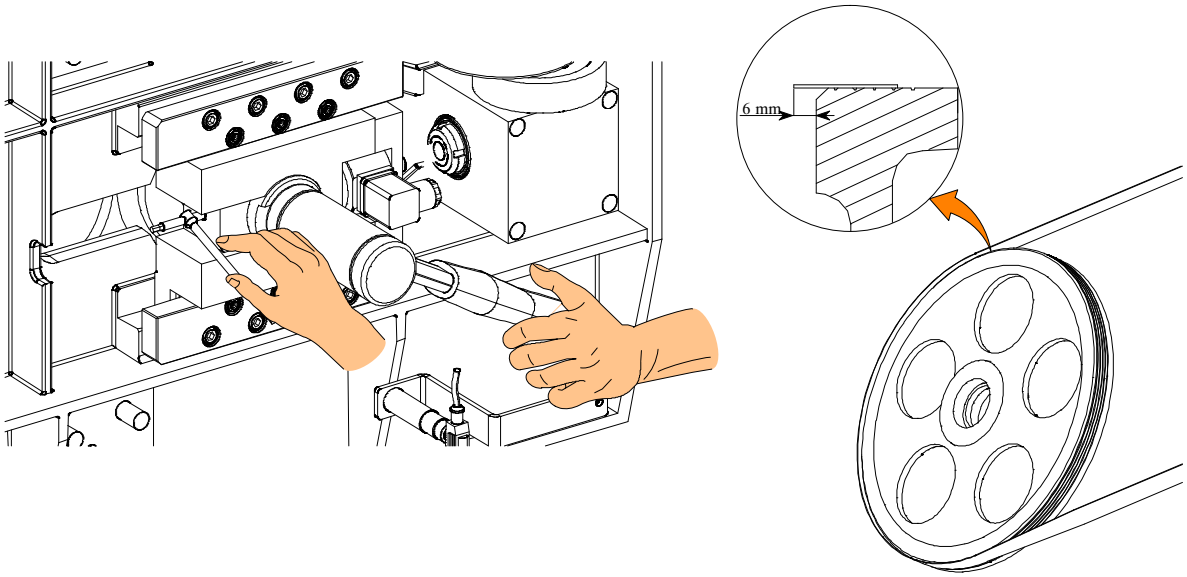

▶ if necessary, repeat the operation till getting the correct position.

Rear flywheel alignment is closely linked to adjustment of the front flywheel.

▶ Adjust by loosening all pulley locking screws and moving the pulley manually inwards or outwards according to the distance of the blade from the pulley machined surface. Tighten the screws again and check the coplanarity making the belt turn a few times.

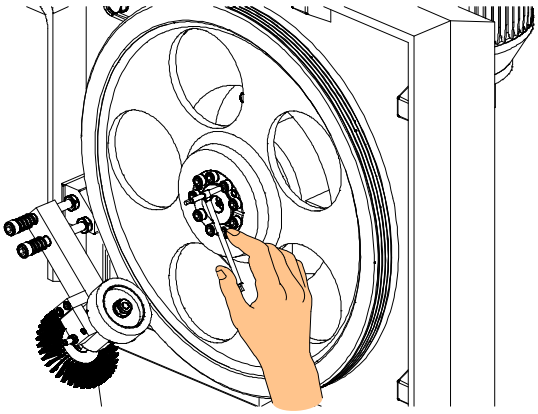

Feeder

Should the feeder at a later stage in time become misaligned with the cutting table, then use the levelling devices located on the side of the machine and the loading table to restore. Misalignment can be measured using a workshop standard ruler or a straight bar section.

▶ Open the blade cover.

▶ Place the ruler on top of the feeder to check that the feeder is parallel to the cutting table.

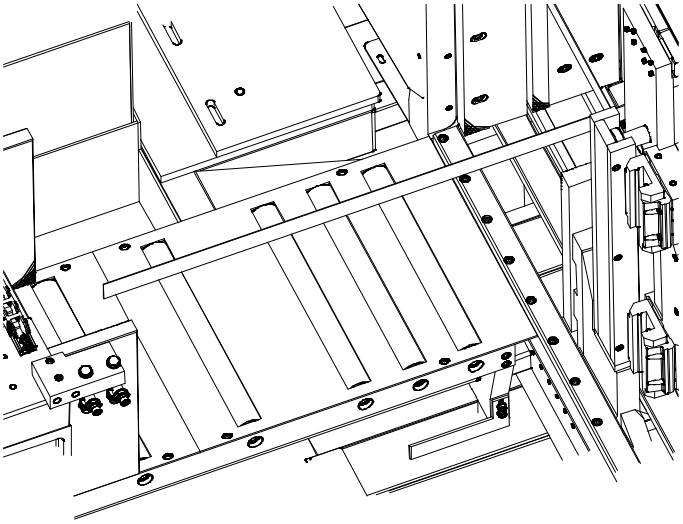

▶ The material to be cut should touch and not rub along the machine work table, make sure that the height of the feeder is at least 0,1–0,05 mm above the cutting table.

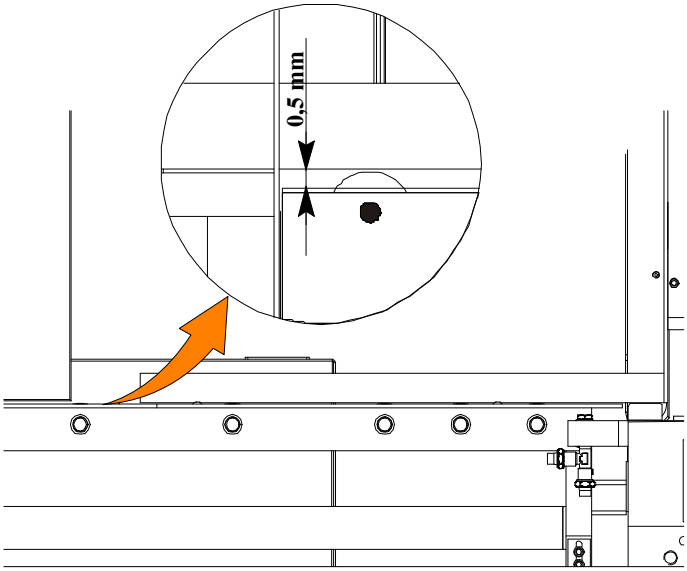

▶ If the feed table is not parallel to the cutting table, move the feed carriage away from the platform, then loosen the fixing TCEI screws on the feeder (A–B) and gain access by removing the cover indicated by the arrow C.

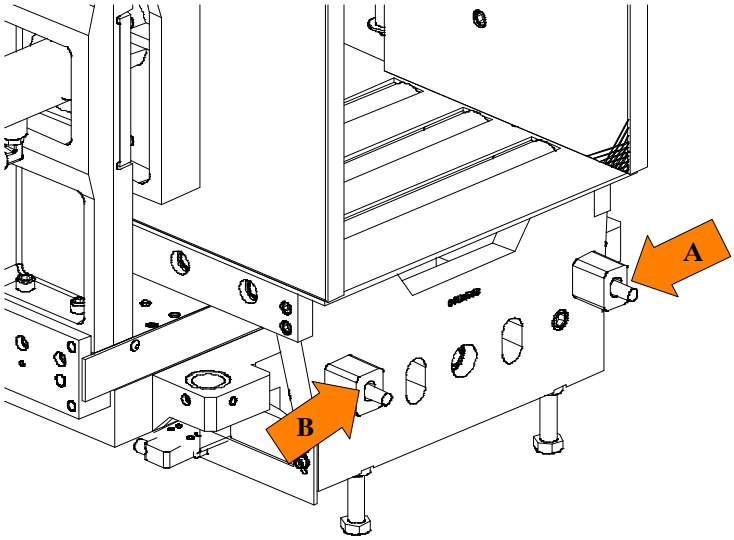

▶ Adjust the foot height (D–E), according to the measurement read on the ruler on the cutting table so as to obtain a difference in level of 0.5 mm between the two tables.

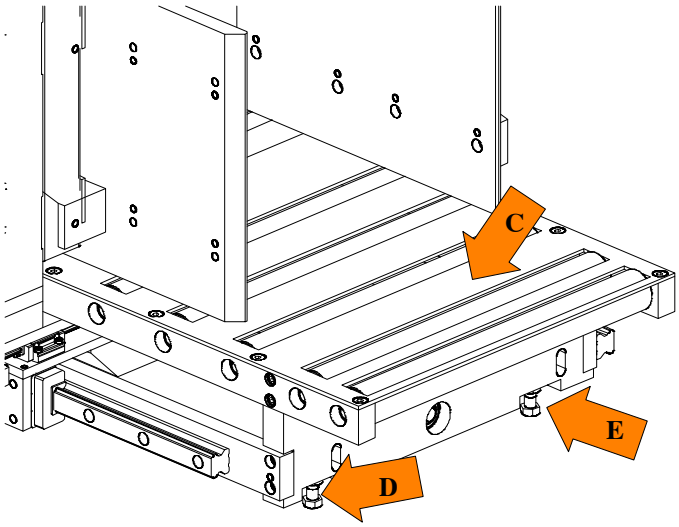

▶ After having set the height next to the fixed platform, always with the ground ruler, adapt the rest of the feeder adjusting the height of the supporting brackets by the suitable slots.

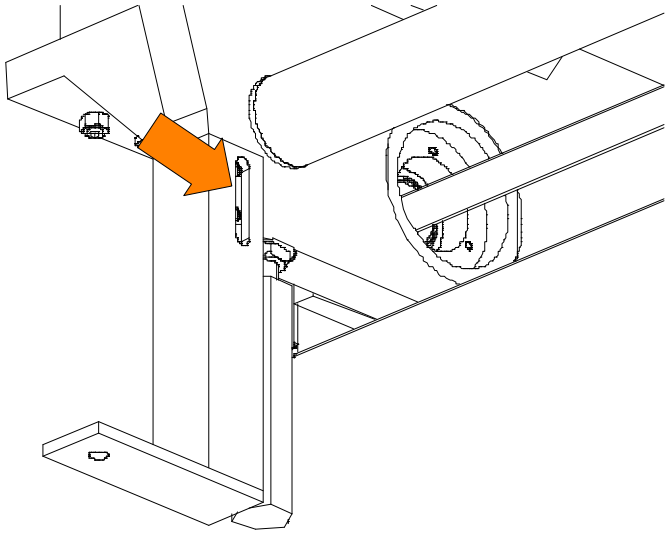

Maintenance and choice of consumables

8

H−320A is built to be sturdy and long−lasting It has no need of any special maintenance, though, like all other tools, it needs adjusting from time to time, especially if not regularly looked over or used without due care.

This chapter, therefore, is intended as a guide for those who want to look after the machine and get the most out of it for as long as possible.

The role of the operator

The person operating and maintaining the machine must follow these instructions for his own safety, as well as for the safety of other personnel, and in the interests of machine productivity:

- check that his own work and that of the other operators of the machine always complies with the relevant safety standards. Therefore, check that the safety devices are in position and work perfectly and that personal safety requirements are complied with.
- Ensure that the working cycle is efficient and guarantees maximum productivity, checking:
  - the functions of the main components of the machine;
  - the sharpness of the blade and coolant flow;
  - the optimum working parameters for the type of material.
- Check that the quality of the cut is that required and that the final product does not have any machining defects.

Maintenance requirements

- All ordinary and extraordinary maintenance must be carried out with the power switched off and the machine in emergency condition.
- To guarantee perfect operation, all spare parts must be MEP S.p.A originals.
- On completion of maintenance works, ensure that the replaced parts or any tools used have been removed from the machine before starting it up.
- Any behaviour not in accordance with the instructions for using the machine may create risks for the operator.
- Therefore, read and follow all the instructions for use and maintenance of the machine and those on the product itself.

General maintenance

Daily

The daily maintenance operations to carry out on the machine are as follows:

▶ remove all swarf from the machine (preferably with a non−fibrous cloth);

▶ empty the swarf drawer (this is located on the right side of the base);

▶ top up the lubricant/coolant level;

▶ check state of blade wear and replace if necessary;

▶ check the blade cleaning brush, clean and relocate; if worn, replace;

▶ at the end of the working day, slacken the blade to 5 Bar (70 Kg) tension to prevent unnecessary and damaging stress on the machine.

Weekly

The weekly maintenance operations are as follows:

▶ remove all swarf;

▶ clean the vice and lubricate all joints and sliding surfaces with a good quality oil;

▶ Control the blade tension that should be 900 Kg (70 Bar) for the machine to work efficiently.

▶ clean the air intake vents of the electrical panel: remove the fan and clean the air filter by blasting with compressed air.

▶ Control the oil level of the hydraulic unit and top up whenever necessary. Check for oil leaks in the hydraulic couplings and that no pipes have been badly bent by accident.

Monthly

This section lists the operations to be carried out for the monthly maintenance of the machine:

- check the perpendicularity of the blade to the work surface; if it is necessary to adjust the blade setting, follow the instructions set out in Chapter 7;
- check the state of the widia inserts and the blade steady button; replace if worn or chipped; check their positions and adjust if necessary (see Chapter 7);
- thoroughly clean the bottom of the water tank and the electropump filter.

Maintenance of working parts

During maintenance work on the **H–320A**, special attention should be paid to the operating parts described in Chapter 7. The worm reduction gear filted on the machine requires no maintenance.

Hydraulic powerpack

Maintenance of the hydraulic powerpacks.
After every 1000 working hours:

- check the oil level visually, topping up with compatible oil if necessary,
- check that the pipe couplings are tightened;
- check for any leak.

After every 2000 working hours:

- carry out the same operations scheduled after 1000 working hours;
- check that the filters are clean.

After every 3000 working hours:

- carry out the same operations scheduled after 1000 and 2000 working hours;
- check the life declared in the oil specifications;
- drain the circuit and the tank of the power pack, filter the initial oil charge, if the oil life is still valid;
- drain the circuit and the tank of the power pack, replace the initial oil charge, if the oil life is not valid any more;
- never use cotton or frayed rags to clean the tank;
- clean or replace the filters;
- operate the machine idle for 30 minutes to drain the circuit automatically; at the end, check the oil level e possibly top up.

Consumable materials

It is essential to use specific oils for the pneumatic and lubricant/coolant circuits. The oils suitable for each of these circuits are listed below.

Oil for transmission box

The machine can be equipped with a worm gear which is permanently lubricated and therefore maintenance–free.

Otherwise, the machine can be equipped with a worm gear having filler cap, level checker and drain to top the oil up if necessary. Below, there is a short list of synthetic oils for permanent lubrication:

BP Energol SG XP220 – KLUBER Syntheso D220EP – ESSO Glycolube Range 220 – IP CT614 – FINA Girans.

– transmission box capacity Lt. 0.320

Oils for hydraulic circuit

The hydraulic system of the machine works with FOX YE 32 oil. This oil is used by the head cylinder, vice cylinders, blade tensioning cylinder, and the hydraulic power packs. The following oils may also be regarded as compatible or having equivalent specifications:

API Cis 32 – ARAL Vitam GF 32 – CASTROL Hyspin AWS 32
ESSO Nuto H 32 / HP 32 – IP Hydrus oil 32 – TOTAL Azolla ZS 32
VALVOLINE Hydraulic HLP 32 – MOBIL DTE 24 / 25 / 26
MOBIL Vacuoline Oil 1405 – FIAT HTF 32 – Q8 Haydn 32
SHELL Tellus oil 32 – BP Energol HLP 32

Hydraulic power pack:
– reservoir capacity litres 70

Oil for lubricant/coolant fluid

The oil used for the machine lubricant/coolant fluid is CASTROL Syntolin TFX. Though there are no specific standards for these types of oils, MEP considers that the above product has the best price/quality rapport. The following oils can also be said to have similar characteristics and are therefore compatible:

AGIP NB 200 – SHELL Lutem TT – IP Utens Fluid–F

Finally, a lubricant/coolant guaranteed and distributed by a band saw manufacturer (LENOX) is BAND–ADE SAWING FLUID LENOX.

– tank capacity Lt. 200
– oil concentration 5–6 %

Oils for spray mist system (optional)

The oil type used for the machine spray mist system is the cutting oil: Blaser Vascomill F 22.
Though there are no specific standards for these types of oils, MEP considers that the above product has the best price/quality rapport. The following oils can also be said to have similar characteristics and are therefore compatible:

SHELL MACROM 401 F22 – AGIP ESTRAMET F20

Cutting speed and choice of tools

9

The cutting speed is determined by the blade speed and the head feed speed. While the head speed is provided by the downstroke movement of the head, the blade rotation speed can either be fixed or variable. This chapter describes the cutting speeds the machine can operate at in the standard version, as well as the speeds for which the optional electronic speed controller (inverter) is necessary. When using the **H–320A**, it is important to select the correct type of blade for the material to be cut. This chapter explains the limitations and specific applications of the different types of blades.

Cutting speed

Standard machine

The standard version with 4–pole motor, has a speed range from 15 to 100 m/min. The inverter is an electronic instrument installed on the **H–320A**, to control the rpm of the spindle motor. This instrument simplifies special cutting jobs by adjusting the blade rotation speed to suit the kind of material being cut. It thus optimises blade usage, since you can adapt a blade not designed for a specific type of material and avoid premature blade wear.
The inverter's specifications are set out below as listed earlier in the *"Machine specifications"* table in Chapter 1.

Inverter technical specifications	
Protection rating	IP 31
Vibration and shock resistance (EN50178)	0.6 gn from 10 to 50 Hz 2 gn from 50 to 150 Hz
Max. relative humidity	93% without condensation or drop–forming
Acceptable Temperature Range (EN 50178)	For warehouse storing: from –25° C to +65° C For operating purposes: from –10° C to +40° C
Max. altitude	1000mt. with no derating
Supply	– single phase: 200V – 15% to 240V + 10%
	– three phase: 200V – 15% to 230V + 10% 380V – 15% to 460V + 10%
Frequency	50/60 Hz ± 5%
Output voltage	Maximum voltage equal to the supply voltage
Output frequency range	0,5 a 320 Hz
Max. transients	150% of electronic speed control rated current for 60 secs.
Frequency resolution	– Display: 0.1 Hz – Analog inputs: 0.1 Hz per 100 Hz max.

Inverter technical specifications	
Switching frequency	Adjustable from 2.2 to 12 Hz max.
Electronic speed control protection and safety devices	Galvanic insulation between power and control panel
	Short circuit protection: – of available internal supplies; –between U–V–W output phases between phase and earth for calibres from 5.5 to 15Kw
Motor protections	Thermal protection against overheating and overcurrents
Motor protections	Protection integrated in the electronic speed control with 1^2t calculation
	Protection integrated in the electronic speed control with 1^2t calculation
Motor protections	Protection integrated in the electronic speed control with 1^2t calculation

Choice of blade

When using band saws to cut metals, an important factor is the choice of pitch, i.e. the number of teeth per inch (25.4 mm.), which must be suitable for the workpiece material. The following recommendations may be taken as general guidelines:

- thin–walled materials, such as sheet steel, tubes and profiles require a fine pitch frequency. 3 to 6 teeth should be engaged in the breadth of the material at any one time;
- large section cutting requires a coarse pitch to cope with the higher volume of swarf and optimal tooth penetration;
- soft materials (aluminium alloys, soft bronze etc.) also require a coarse tooth pitch.

Saw tooth pitch

The choice of teeth per inch, therefore, depends on various factors:

- the size of the section;
- the hardness of the material;
- workpiece wall breadth.

Very large dimensions require coarse teeth, while small dimensions require finer teeth. Whatever the case, ensure that there are always at least six teeth engaged in the cut, with reference to the thinnest vertical walls positioned transversally to the blade.
Concerning the type of Shark machine, a first broad distinction can be made according to the hardness of materials:

	Mild steels < 61 HRB < 55 kg/mm^2	Hard steels > 65 HRB > 65 kg/mm^2
	NR. TEETH/INCH	**NR. TEETH/INCH**
MINIMUM	3 / 4	5 / 8
OPTIMUM	4 / 6	6 / 10
MAXIMUM	8 / 12	10 / 14

Cutting speed and downstroke speed

The cutting speed (m/min) and the downstroke speed (cm^2/min) are limited by the heat generated around the points of the teeth. If the downstroke speed is too high, the cut will not be straight, either vertically or horizontally.

The cutting speed depends, as indicated above, on the tensile strength of the material (kg/mm^2), its hardness (HRB) and the thickness of largest sections. The downstroke speed depends on the material thickness. Therefore, large−section, solid or thick−walled materials (s > 5 mm), can be cut at high speeds, providing there is sufficient swarf removal from the blade; thin−walled materials, such as slim piping or profiles, must be cut using low and especially constant downstroke speeds.

A new blade must be worn in, which in effect means lowering the downstroke speed to about half that of normal (from 60 to 70 cm^2/min on normal steels), equal to a removed surface area of about 300 − 600 cm^2.

Types of swarf:

- Very fine or fragmented swarf indicates that the downstroke speed and/or cutting pressure is too low.

- Thick and/or blue swarf indicates that the blade is overloaded.

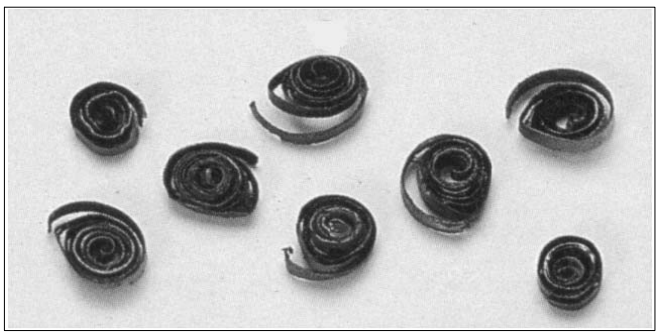

- Long coils of swarf indicate ideal cutting conditions.

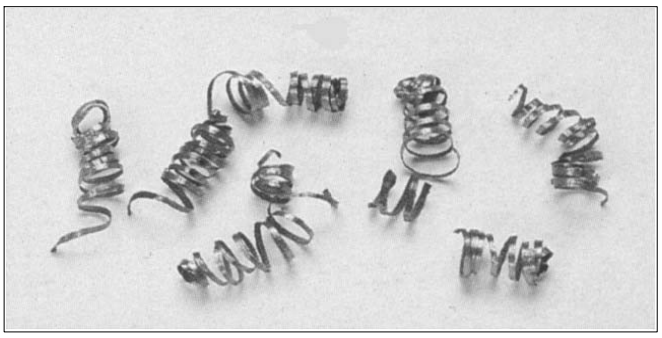

Lubricant/coolant fluid

The lubricant/coolant fluid must ensure so that neither the saw teeth nor the work piece material in the cutting zone overheat. Furthermore, there must be a sufficient quantity and pressure of lubricant/coolant to remove swarf from the cutting zone. The lubricant/coolant fluid must be of the highest quality in order to prevent tooth abrasion and welding of swarf to the teeth themselves (seizing).

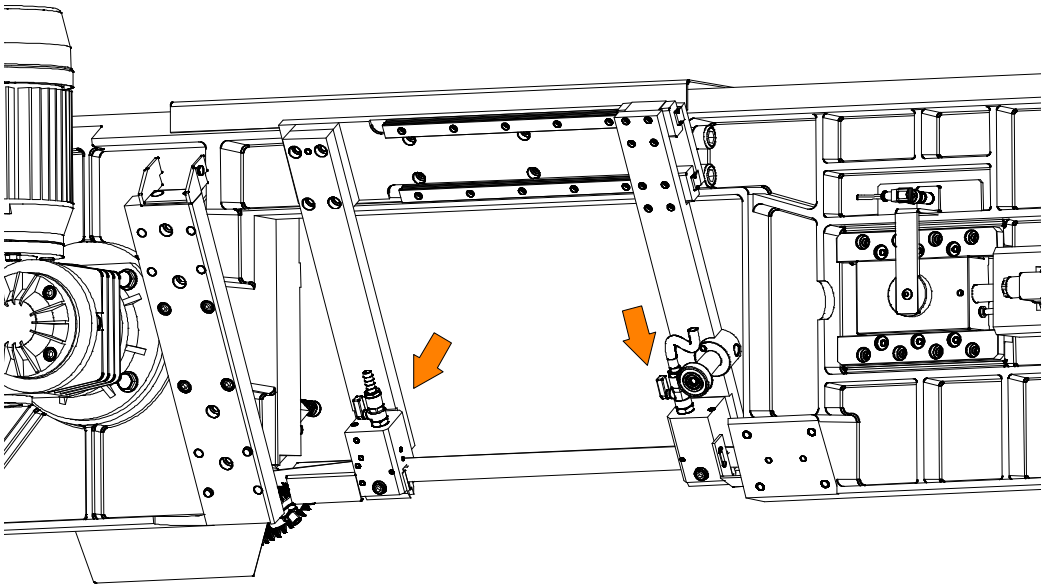

Blade structure

The most commonly used blades are the bimetal types, i.e. manufactured with a silicon steel body and having a high fatigue strength, and super high–speed steel teeth; the two parts are welded by electronic or laser–welding.
Standardised teeth types are termed M2 and M42; the difference being that M42 teeth are harder due to the addition of cobalt to the steel used to make the teeth.

Key									
Mo	Molybdenum	Ni	Nickel	Si	Silicon	V	Vanadium	W	Tungsten
Al	Aluminium	C	Carbon	Co	Cobalt	Cr	Chromium	Mn	Manganese

TYPE OF BLADE	C	Mn	Si	Cr	W	Mo	V	Ni	Co	Al	HRC
	0,47	0,75	0,22	1,00		1,00	0,12	0,52		0,08	45–50
HSS M2 HRC 65–66 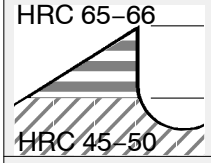 HRC 45–50	0,85	0,25	0,30	4,15	6,37	5,00	1,92				64–66
HSS M42 HRC 67–68 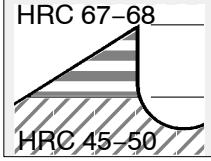 HRC 45–50	1,07	0,25	0,20	3,75	1,50	9,50	1,15		8,00		67–69

N.B. The numbers in the columns indicate the % content of the element in the steel.

Blade types

The blades mounted on the **H–320A** are 4640x34x1,1 mm.; the length can vary between 4665 mm. and 4615 mm., thanks to the blade tensioner device. The blades, however, apart from size and tooth pitch, are differentiated by other geometrical characteristics which determine their specialised uses:

- tooth cutting angle (rake), can be 0¿ or positive;
- the tooth pitch can be constant or variable;
- the set, i.e. the various teeth alignments, have many possible configurations.

Conventional rake

Cutting angle 0°, constant pitch.

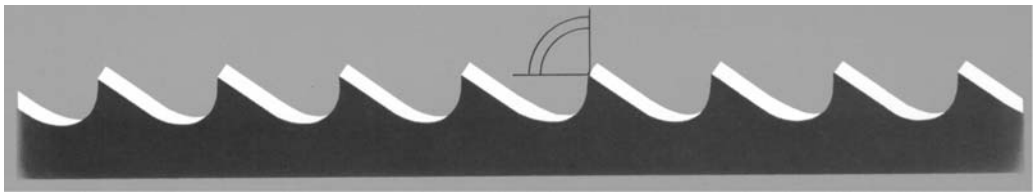

In general use, for small or medium section cast iron or steels and rolled materials, for straight or angled cuts.

Positive rake

Positive cutting angle 9–10°, constant pitch.

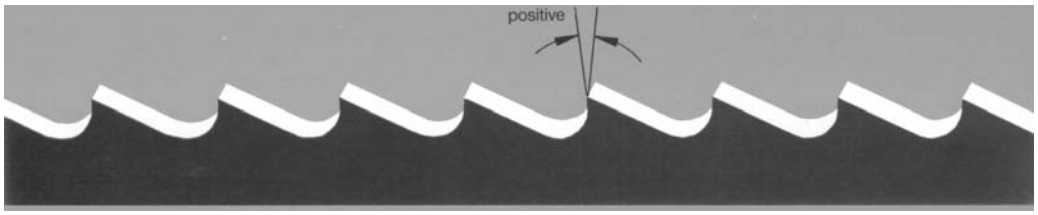

Can be used for cutting all types of materials, and is particularly suited to low–carbon and non–ferrous steels. Used for cutting very large sections and diameters.

Variable pitch

These blades have groups of teeth having different pitches and, as a consequence, have various tooth dimensions and differing relief angles. These are also available in M2 and M42 types with zero and positive rakes. The alternation of the different types of teeth helps to prevent vibration and noise. Elimination of vibration increases the useful life of the tool and improves the cut surface finish.

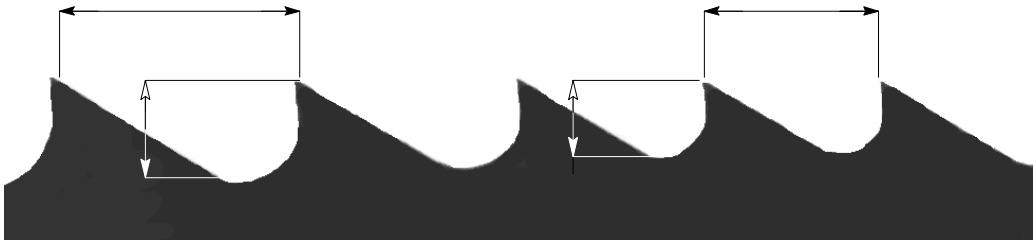

A further advantage in using these types of blades lies in the fact that a wide range of different material types and dimensions can be cut with the same blade.

Variable pitch blades with 0° cutting angle

This type of tooth formation is ideal for cutting single pipes or medium size bundles, in accordance with the capacity of the machine.

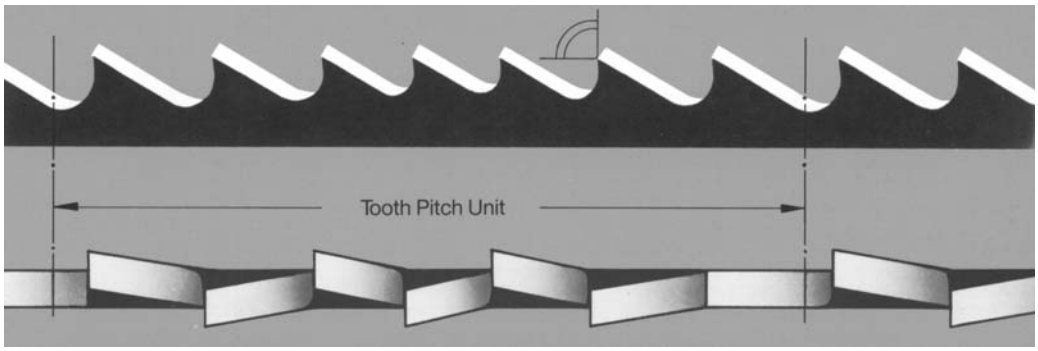

Pitches available: 3–4 / 4–6 / 5–7 / 5–8 / 6–10 / 8–12 / 10–14.

Variable pitch with positive rake (from 9 to 10 degrees)

This toothing type is the most suitable for cutting large dimension pipes and profiles, including large sections, as well as for cutting solid sections up to the machine capacity limit.

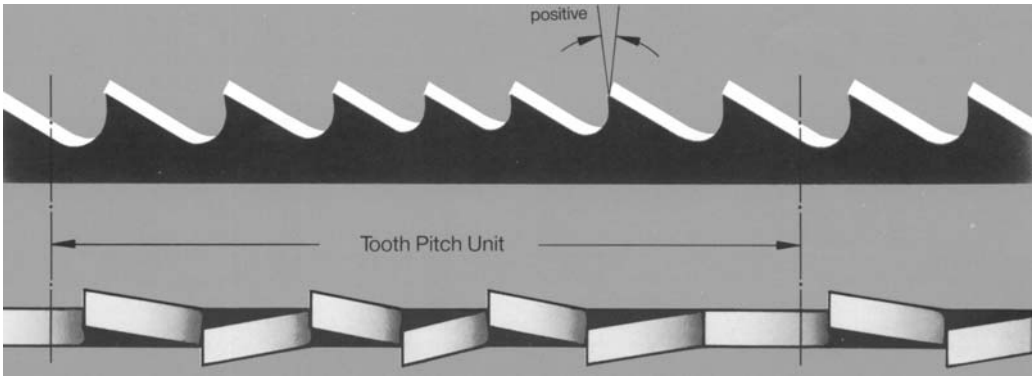

Pitches available: 3–4 / 4–6.

Set:

The term set refers to the section of material removed by the blade during the cutting operation, i.e. relating to width of cut and the offset position of the teeth with respect to the blade back.

Standard or splayed set

This term is used to describe an alternated angling of the teeth: one to the right, one to the left and one straight.

For general use on materials over 5 mm. thick. Suitable for cutting steels, castings and non–ferrous hard materials.

Undulated set

Used to describe groups of teeth undulating alternatively to the right and left.

This type of set is used with very fine teeth for cutting thin pipe walls and small−section profiles (from 1 to 3 mm).

Alternating grouped sets

These are groups of teeth angled to the right, one straight tooth, then a further group angled to the left.

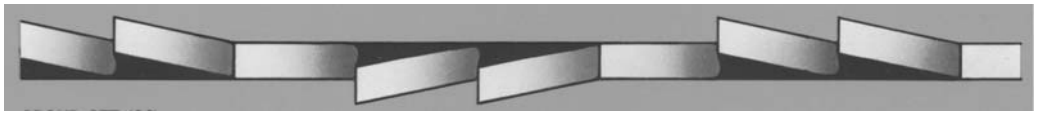

This set is used for very fine teeth for cutting very thin sections (less than 1 mm).

Alternating set

This set is one tooth to the right followed by one to the left.

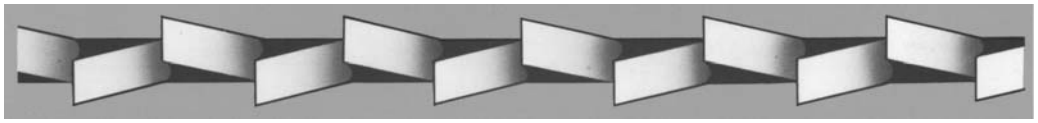

This set is used for soft non−ferrous materials, plastics and wood.

Blade selection table relating to cutting speed and downstroke speed

Cutting material	Cutting speed mt./min	Dimensions of the cutting section S (mm)												Lubrication	sq. mt./min. cut
		S10		10S30		30S50		50S80		80S120		120S230			
Structural steel Casehardened steel Steel for turning Mild steel	50 / 70	14	10 / 14	10	10 / 14	8	6 / 10	6	5 / 8	4	4 / 6	3	3 / 4	Emulsible oil Cutting fluid	60 – 70
High–duty cast iron Rolled steel Spring steel	40 / 50	14	10 / 14	10	10 / 14	8	6 / 10	6	5 / 8	4	4 / 6	3	3 / 4	Emulsible oil	50 – 60
Alloy steel Tool steel Valve steel	30 / 40	14	10 / 14	10	10 / 14	8	6 / 10	6	5 / 8	4	4 / 6	3	3 / 4	Emulsible oil Cutting fluid	15 – 20
Stainless steel Nodular cast iron	30 / 40	14	10 / 14	10	10 / 14	8	6 / 10	6	5 / 8	4	4 / 6	3	3 / 4	Emulsible oil	15 – 20
Copper Soft bronze	90 / 150	14	10 / 14	10	10 / 14	6	5 / 8	4	4 / 6	3	3 / 4	3	3 / 4	Emulsible oil	75 – 90
Brass	90 / 300	14	10 / 14	10	10 / 14	6	5 / 8	4	4 / 6	3	3 / 4	3	3 / 4	Emulsible oil	80 – 90
Hard bronze	20 / 40	14	10 / 14	10	10 / 14	6	5 / 8	4	4 / 6	3	3 / 4	3	3 / 4	Emulsible oil	25 – 40
Aluminium	80 / 800	14	10 / 14	6	10 / 14	4	4 / 6	3	3 / 4	3	3 / 4	3	3 / 4	Emulsible oil	70 – 80
Plastics	90 / 400	14	10 / 14	6	10 / 14	4	4 / 6	4	4 / 6	3	3 / 4	3	3 / 4	Emulsible oil	80 – 90

Blade pitch **Number of teeth per inch**

Classification of steels

This page provides a table giving the user specific information on the cutting materials, in order that they can be classified on the basis of their hardness, and thus the correct tool can be selected for the task in hand.

Types of steel				Hardness		
UNI	DIN	BS	AISI	Brinell HB	HRB	Kg/mmq
C 22 – C 35	CK 22 – CK 3	En 2 C – En 6	1022 – 1035	160 – 170	34 – 87	55 – 59
C 45	CK 45	En 8	1040	160 – 180	84 – 89	55 – 61
C 10 – C 15	CK 10 – CK 15	En 32 C – En 328	1010 – 1015	150 – 175	81 – 87	51 – 59
C 60	CK 60	En 9	1060	160 – 180	84 – 89	55 – 61
		4360 – 50 A		160 – 180	84 – 89	55 – 61
	17100	3706 – 1.2.3.	ASTMA – 36/68	160 – 180	84 – 89	55 – 61
45 Cr Si 9	17115	4360		160 – 180	84 – 89	55 – 61
		En 20 A		190 – 215	91 – 97	64 – 73
34 Cr Mo 5	17221	970 – 1955	1065	180 – 205	89 – 94	61 – 69
		En 18 B	5135 – 5145	180 – 200	89 – 93	61 – 67
35 Cr Mo 4	34 Cr Mo	En 19 B	4135	200 – 230	93 – 99	67 – 77
	36 Ni Cr 6	En 111	3135	190 – 230	91 – 99	64 – 77
		En 36	3310 – 3315	200 – 230	93 – 99	67 – 77
20 Nc Cr Mo 2		En 362	4315	200 – 225	93 – 98	67 – 75
		En 100 D	8645	190 – 220	91 – 97	64 – 74
	1880 X C 95	DX	W 1	150 – 190	80 – 91	51 – 64
100 Cr 6	100 Cr 6	En 31	52100	210 – 230	96 – 99	71 – 77
		B 2	L 6	190 – 230	91 – 99	64 – 77
52 Nc Cr Mo KU	56 Ni Cr Mo V 7			217 – 248	97 – 102	73 – 83
	2750 (280W18)	18 % W	T 1	217 – 248	97 – 102	73 – 83
		1507 – 825	1310	160 – 220	84 – 91	55 – 64
		A 2	M 13	200 – 230	93 – 99	67 – 77
	210 Cr 46	A 1	D 3	215 – 240	97 – 101	73 – 81
	4845	En 58 G	309 S	150 – 200	80 – 93	51 – 67
X 12 Cr 13	4001	En 56 A	410	150 – 200	80 – 93	51 – 67
X 6 Cr Ni 1810	4301	En 58 E	304	130 – 170	74 – 86	45 – 58
X Cr Ni 1910						
X 8 Cr Ni Mo 1713	4401	1501 – 845	316	160 – 200	84 – 93	55 – 67
Phosphor bronze				60 – 100	56,5	36
Aluminium bronze				70 – 90	49	32
Manganese bronze				95 – 120	51 – 69	34 – 42
Silicon bronze				70 – 100	56,5	36

Classification of steels

Material	SS Svezia	AISI U.S.A.	DIN Germania	BS Inghilterra	UNI Italia	AFNOR Francia
Carbon steels	1311 1572	1015 – 1035	C 22 – C 35 20 Mn 5 – 28 Mn 6 CK 22 – CK 50	050 A 20 080 M 46 – 50 120 M 19 150 M 28	C 15 – C 35 C 22 Mn C 28 Mn	XC 18 XC 38 H 1 20 M 5
Carbon steels	1650 1880	1040 – 1064 1770 – 1880	CK 60 – CK 101 36 Mn 5 Cm 45 – Cm 55	060 A 40 – 060 A 96 070 M 55 080 A 40 – 080 A 62	C 45 – C 60	XC 60 – XC 75 40 M 5 XC 42 H 1 XC 55 H 1
Alloy steel	2120 2255	1335 – 1345 4130 – 4140	25 Cr Mo 4 – 42 Cr Mo 4	1717 CDS 110 708 A 37 708 M 40	25 Cr Mo 4 – 42 Cr Mo 4	25 CD 4 42 CD 4
Alloy steels	2541 2230 2258	4337 – 4340 50100 – 52100 6145 – 6152 8630 – 8645	40 Ni Cr Mo 6 40 Ni Cr Mo 73 34 Cr Ni Mo 6, 100 Cr 6	735 A 50, 534 A 99 817 M 40 311 rodzaj 6, 7	40 Ni Cr Mo 2 – 40 Ni Cr Mo 7 30 Ni Cr Mo 8 – 35 Ni Cr Mo 6 KB 50 Cr V 4, 100 Cr 6	35 NCD 6 50 CV 4 100 C 6
Tool steels	2310 – 12 2754 – 55	D – 2, D – 3	X 210 Cr 12 X 155 Cr V Mo 121	BD 2, BD 3	X 205 Cr 12 KU X 155 Cr V Mo 121 KU	Z 160 CVD 12 Z 200 C 12
Tool steel	2550 2710	S – 1	60 W Cr V 7 55 Ni Cr Mo V 6	BS 1	55 W Cr V 8 Ku 55 Ni Cr Mo V 6	55 NCVD 7
Stainless steels	2324 2333	201, 202 302, 304	X 2 Cr Ni 189 X 5 Cr Ni 189 G – X 2 Cr Ni 189	304 S 15 304 C 12 304 S 12	X 2 Cr Ni 18.11 X 5 Cr Ni 18.10 G – X 2 Cr Ni 19.10	Z 2 CN 18.10 Z 6 CN 18.09 Z 3 CN 19.10
Stainless steel	2343 2353	314, 316 317	X 15 Cr Ni Si 2520 X 5 Cr Ni Mo 1812 X 5 Cr Ni Mo 1713	316 S 16 317 S 16	X 16 Cr Ni Si 2520 X 5 Cr Ni Mo 1713 X 5 Cr Ni Mo 1815	Z 12 CNS 25.20 Z 6 CND 17.12

Troubleshooting

10

This chapter describes the inspection and troubleshooting procedures for the **H–320A**. Regular inspections and efficient maintenance are essential to ensure your machine gives you a long, trouble–free service life. The chapter is divided into two sections: the first being dedicated specifically to TROUBLESHOOTING BLADE AND CUTTING PROBLEMS, while the second TROUBLESHOOTING section concerns troubleshooting general machine operating faults. Taken together they form a comprehensive troubleshooting guide which will enable you to follow a methodical procedure for solving any problem.

Troubleshooting blade and cutting problems

PROBLEM	PROBABLE CAUSE	SOLUTION
Blade scored or scratched 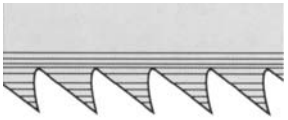	➧ Widia inserts chipped or worn	☞Replace
	➧ Widia inserts loose or tight	☞Adjust
	➧ Widia inserts dirty	☞Clean and re–adjust correctly
Cutting surfaces scored 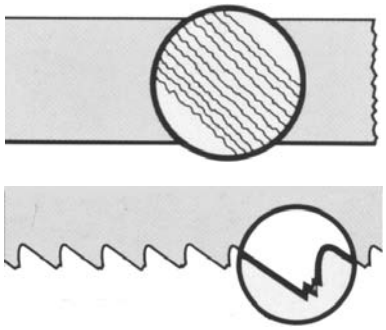	➧ Blade teeth worn	☞Replace blade
	➧ Head downstroke speed too fast	☞Reduce downstroke speed
	➧ Cutting speed too slow	☞Increase cutting speed
	➧ Blade teeth too wide	☞Change for wider teeth
	➧ Free blade guide head too far away	☞Move blade guide head closer so as to leave only that part of the blade free which is needed to effect the cut
	➧ Blade tension low	☞Reset tension to rated tension
	➧ Broken teeth on blade	☞Check and replace blade

PROBLEM	PROBABLE CAUSE	SOLUTION
Rapid tooth wear 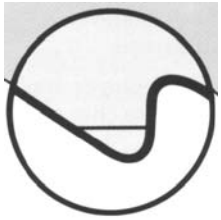	➧ Teeth pointing in the wrong direction	☞Set teeth in correct direction
	➧ Blade worn in wrongly	☞With a new blade cutting should be done at half–speed and with downstroke speed also at half normal speed. After the blade has been worn in (about 300 cm^2 of work for hard cutting materials and about 1000 cm^2 for soft cutting materials) the cutting and downstroke speeds can be brought up to rated levels
	➧ Material too hard	☞Check cutting speed, downstroke speed and blade pressure, as well as type of band saw being used
	➧ Material defective	☞Surface defects: oxides, sand, surface hardening. Hardened inclusions in section. Reduce cutting and downstroke speeds or clean surface.
	➧ Cutting speed too high	☞The teeth slide on the material without cutting: reduce cutting speed
	➧ Head downstroke speed too slow	☞The band saw runs over the material without removing it: increase downstroke speed
	➧ Insufficient coolant	☞Check coolant level and clean pipes and jets
	➧ Incorrect fluid concentration	☞Check and use the correct concentration
	➧ New blade inserted into a partially–made cut	☞The cutting surface might have been subject to a localised heat–induced alteration, making it harder: recommence cut using a slower cutting and downstroke speed. There may be a broken tooth from the old blade lodged in the cut: check and remove before recommencing work
	➧ Flutter	☞Blade tension too low: tighten. Tooth shape or pitch unacceptable: change type of blade used. Widia blade steady buttons too far from the blade back: adjust guide heads, rotating them slightly to bring them closer to the blade back.

PROBLEM	PROBABLE CAUSE	SOLUTION
Cuts not orthogonal or inclined 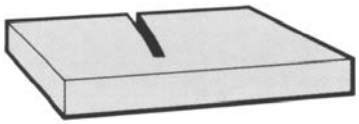	➧ Head downstroke speed too fast	☞Reduce head downstroke speed
	➧ Widia inserts worn	☞Replace
	➧ Inserts loose	☞Adjust width
	➧ Blade guide head positioned wrongly	☞Move mobile head up to the workpiece using the guide plate to leave free only that part of the blade actually needed to make the cut
	➧ Orthogonality of blade to workpiece rest shoulder	☞Check and realign the blade guide heads, then reset the blade orthogonality with the shoulder using the adjustment pin at 0°; then set the stops at 45° right and left by means of the appropriate screws
	➧ Perpendicularity of the blade to the work surface	☞Check and realign the blade guide heads then adjust the blade using the appropriate screws so that it is perpendicular to the work surface
	➧ Blade tension incorrect	☞Bring pressure up to 60 Bar
	➧ Blade worn	☞Replace blade
	➧ Tooth pitch unsuitable	☞Probably a blade with too many teeth per inch is being used; change for a coarser blade
	➧ Cutting speed too slow	☞Increase the cutting speed
	➧ Wrong coolant	☞Check the water and oil emulsion; check that none of the holes or hoses are blocked; direct the jets correctly
	➧ Broken teeth	☞Check the hardness of the material being cut

Broken teeth 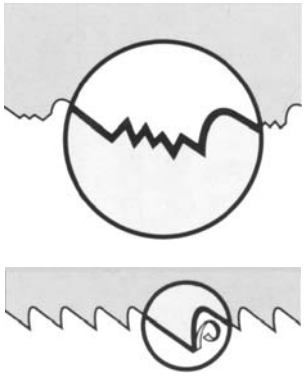	➧ Cutting speed too high	☞Reduce cutting speed
	➧ Downstroke speed too high	☞Reduce downstroke speed

PROBLEM	PROBABLE CAUSE	SOLUTION
Broken teeth 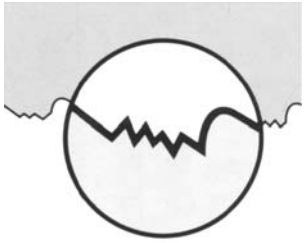 	➧ Cutting pressure too high	☞Check and set to correct pressure
	➧ Tooth pitch unsuitable	☞Teeth too close together: change blade for one with a coarser tooth pitch
	➧ Swarf welded to teeth and gullets	☞Check blade–cleaning coolant jets. Check the blade–cleaning brush. If the swarf is not removed from the blade it will be drawn back into the cut and weld to the teeth, causing tooth breakage
	➧ Swarf welded to teeth and gullets	☞Check blade–cleaning fluid jets. Check blade–cleaning brush. If the swarf is not removed from the blade it will be drawn back into the cut and weld to the teeth, causing the teeth to break.
	➧ Material defects	☞The material may have altered surface areas, such as oxides or sand, or subcooled inclusions in the section. These areas are much harder than the blade and will cause the teeth to break: scrap or clean these materials.
	➧ Workpiece not clamped	☞The blade may break if the workpiece moves during cutting: check the vice, jaws and clamping pressure
	➧ The blade stops in the cut	☞Cutting pressure too high: check and restore to rated pressure. Downstroke speed too fast: reduce speed. Cutting speed too slow: increase. The blade slips on the flywheels: either the wheels are worn and need to be replaced or the blade tension is incorrect (too low) and must be re–adjusted.
	➧ New blade inserted in a partially made cut	☞The cutting surface may have been subjected to a localised heat–induced alteration, making it harder: recommence cut using a slower cutting and downstroke speed. A tooth from the old blade may be left in the cut: check and remove before restarting work.

PROBLEM	PROBABLE CAUSE	SOLUTION
Broken teeth 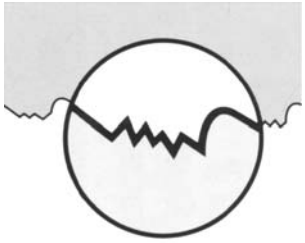 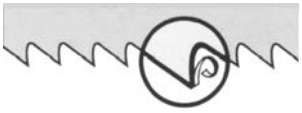	➧ Widia inserts positioned incorrectly	☞Adjust the position of the inserts, especially the width, since blade thicknesses can exceed the manufacturer's declared tolerance ratings
	➧ Widia blade steady buttons	☞Two widia blade steady buttons are located in the top of the blade guide heads which press on the back of the blade to transmit cutting pressure. If these buttons are too far from the blade, the blade may be prone to an up and down undulating action or abnormal vibrations, liable to cause the teeth to break: adjust the position of the heads by rotating them downwards so as to bring the blade steady buttons up against the back of the blade
	➧ Sections with large thickness variations	☞The cutting speed and downstroke speed must be chosen to suit the most critical part of the cut
	➧ Teeth angled in the wrong direction	☞Fit blade so that teeth point in the right direction
	➧ Blade run in wrongly	☞When using a new blade, the cutting and downstroke speeds must be reduced to half the normal operating speed. After the blade has been worn in (about 300 cm2 for hard materials and about 1000 cm2 for soft materials) the cutting and downstroke speeds may be returned to their rated levels
	➧ Insufficient coolant	☞Check coolant level and clean fluid lines and jets
	➧ Incorrect fluid concentration	☞Check and use the correct concentration
	➧ Blade tension too high or too low	☞Check and reset to rated tension

PROBLEM	PROBABLE CAUSE	SOLUTION
Blade path fault 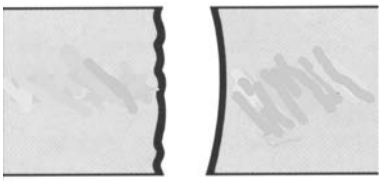	➧ Front flywheel position incorrect	☞Check that the band saw is correctly positioned on the flywheel. Adjust the position of the flywheel under the blade, moving the shaft of the flywheel
	➧ Flywheels worn	☞Replace
	➧ Gaps full of swarf	☞Clean inside machine using blown air.
	➧ Blade guide head alignment	☞Check and adjust
Blade broken 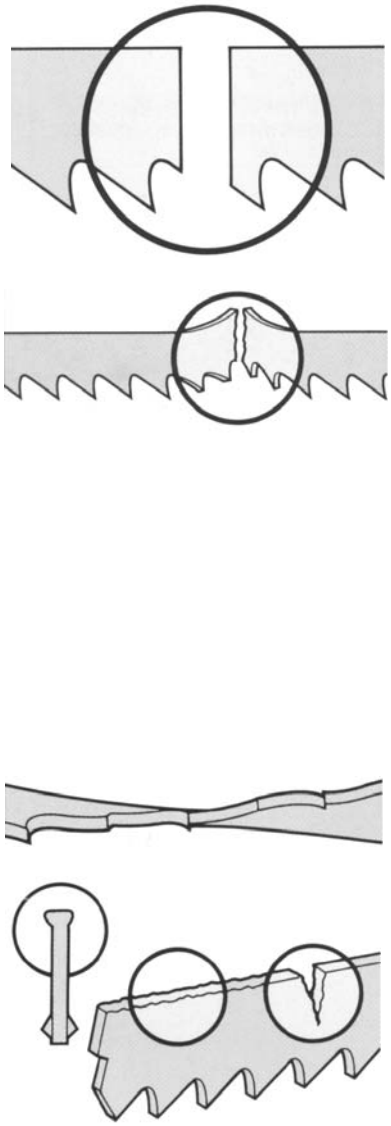	➧ Cutting speed too high	☞Reduce cutting speed
	➧ Head downstroke too fast	☞Reduce head downstroke speed
	➧ Cutting pressure too high	☞Check and set to correct pressure
	➧ Tooth pitch unsuitable	☞Teeth too close together: change the blade for one with coarser tooth spacings
	➧ Workpiece not clamped properly	☞The blade may break if the workpiece moves during cutting: check the vice, jaws and clamping pressure.
	➧ Widia inserts positioned incorrectly	☞Adjust inserts position, especially the width, since blade thickness can exceed the manufacturer's declared tolerance ratings
	➧ Widia blade steady buttons	☞Can have a milling action on the back of the blade if worn or chipped, causing cracks from the back towards the teeth.
	➧ Position of blade on flywheels incorrect	☞The blade may be scraping on the edges of the flywheels: this problem is generally caused by blades which are deformed or wrongly welded (conical) Adjust the position of the front flywheel by moving the pin, or change the blade
	➧ Blade tension incorrect	☞If the blade tension is too high or too low, the blade will be subjected to abnormal stress: set the tension back to the rated value.

PROBLEM	PROBABLE CAUSE	SOLUTION
	➧ Blade weld fault	☞The point at which a blade is welded is its most critical point; problems could be caused by welds which are not aligned perfectly or have inclusions or blowholes
	➧ Free blade guide head	☞The head is too far away from the workpiece: move the head closer, leaving free only that part of the blade actually needed to make the cut
	➧ Teeth in contact with the material before starting the cut	☞Always check the position of the blade before starting a new job, especially for the semi–automatic cycle
	➧ Widia inserts	☞If worn, the inserts can score the blade, weakening it even to breaking point. If the inserts are too far apart, the blade will whip, striking both the inserts and the material. Replace or adjust
	➧ Insufficient coolant	☞Check coolant fluid level; clean pipes and jets
	➧ Incorrect fluid concentration	☞Check and use the correct concentration
	➧ The blade stops in the cut	☞Cutting pressure too high: check pressure and reset to rated pressure. Head downstroke speed too fast: reduce. Head downstroke speed too slow: increase. The blade slips on the flywheels: incorrect or low blade tension; readjust or increase.

Troubleshooting

This section deals with the problems which may occur during machine operation. The MEP 50 controller allows you to test all the machine's electric and electronic devices by checking the status of the input and output signals on the IUD/IUV card (see Chapter 5).

The board IUD/IUV is inside the electric board.

Displaying the diagnostics menu

▶ Power the machine by turning the main switch on the left of the control board.

▶ Tap on the box on the touchscreen shown in the figure.

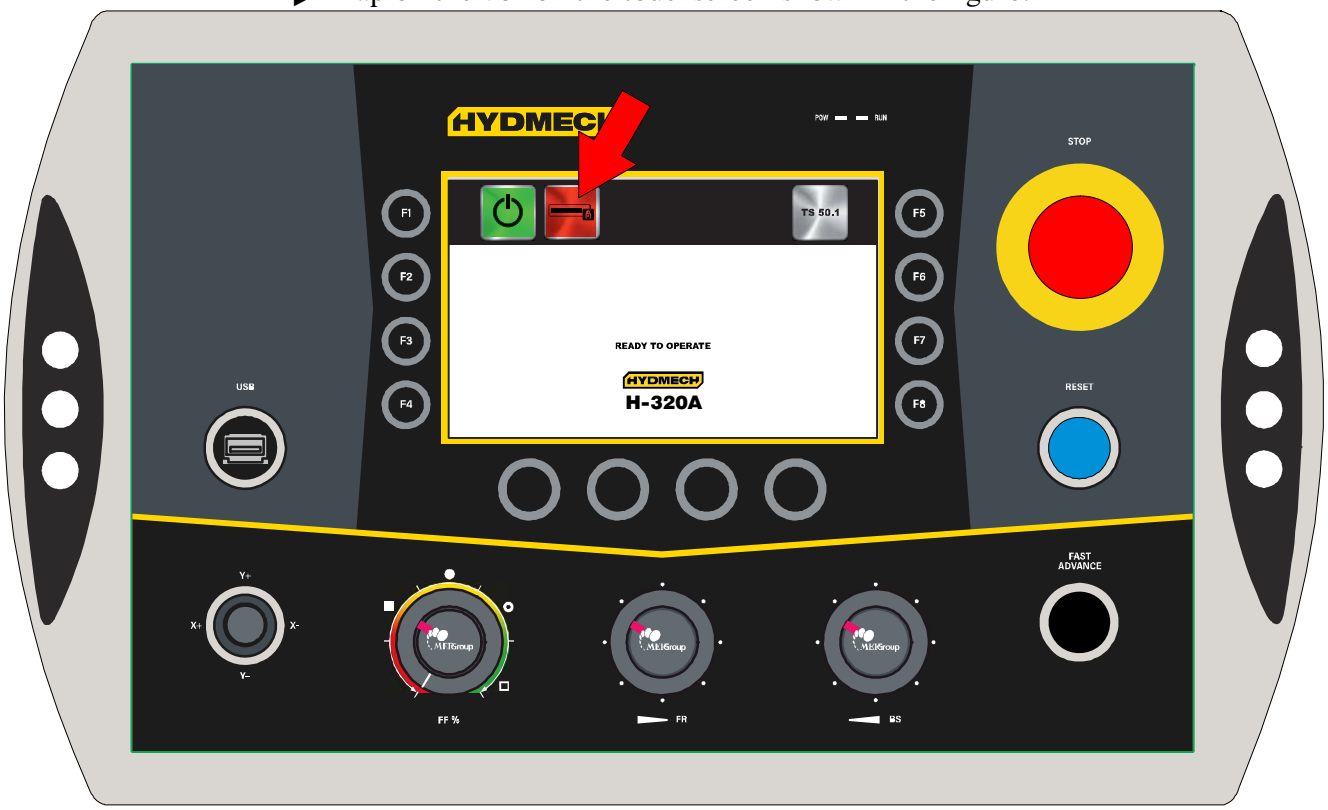

▶ The password entry box will open. Tap the box to open the keypad. Enter 734533.

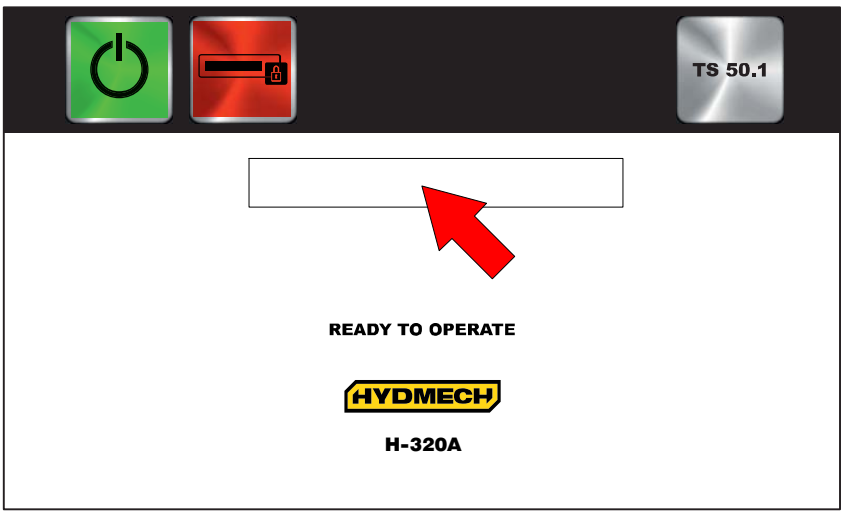

▶ Tap on the box shown in the figure.

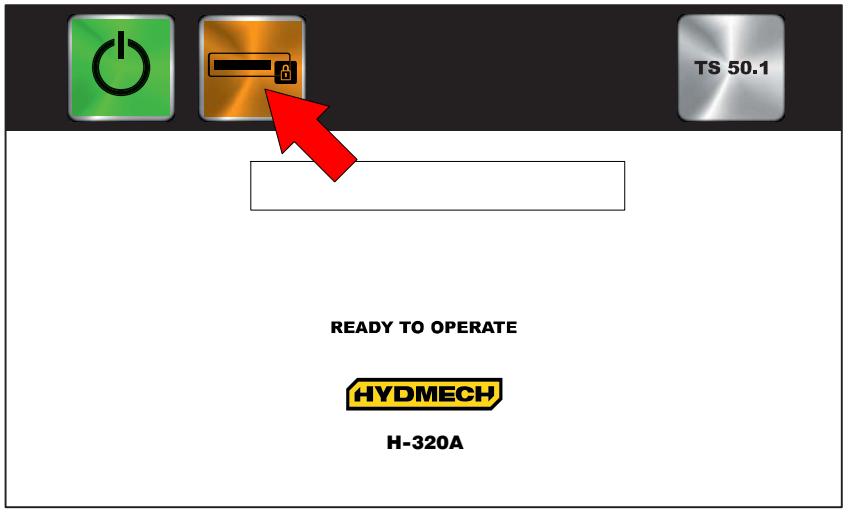

▶ Tap on the box shown in the figure.

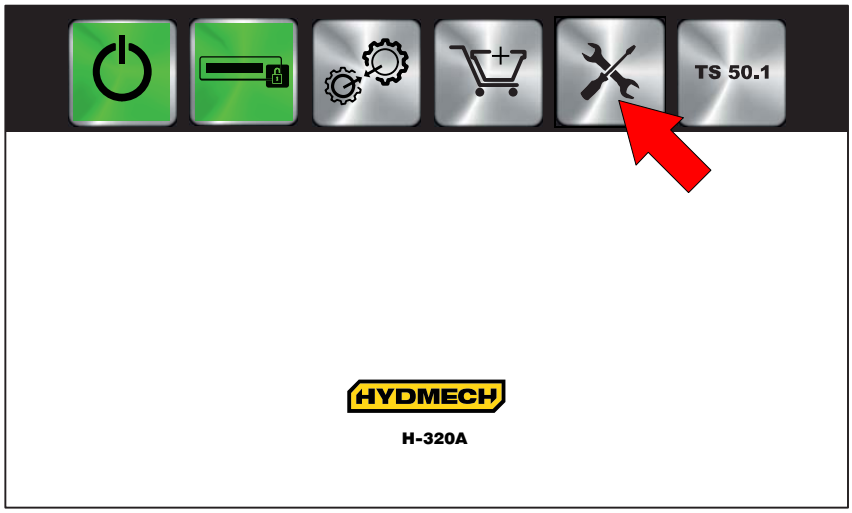

▶ In the Troubleshooting menu, select the type of input/output to be checked by tapping on the corresponding box:

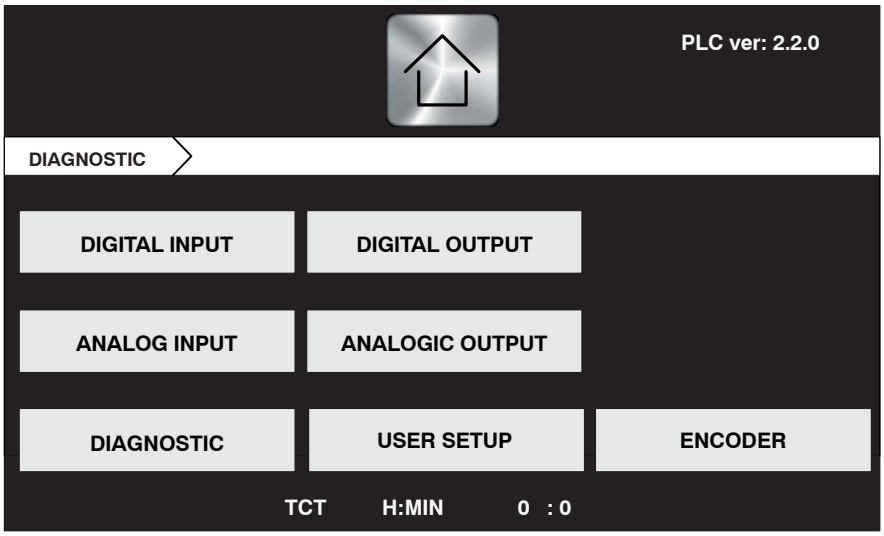

Digital Input

This page can be used to check the state of digital inputs. Information is organised in a table:

Box to go back to the initial list of all inputs and outputs

The icon indicates whether the respective output is on (green) or off (red)

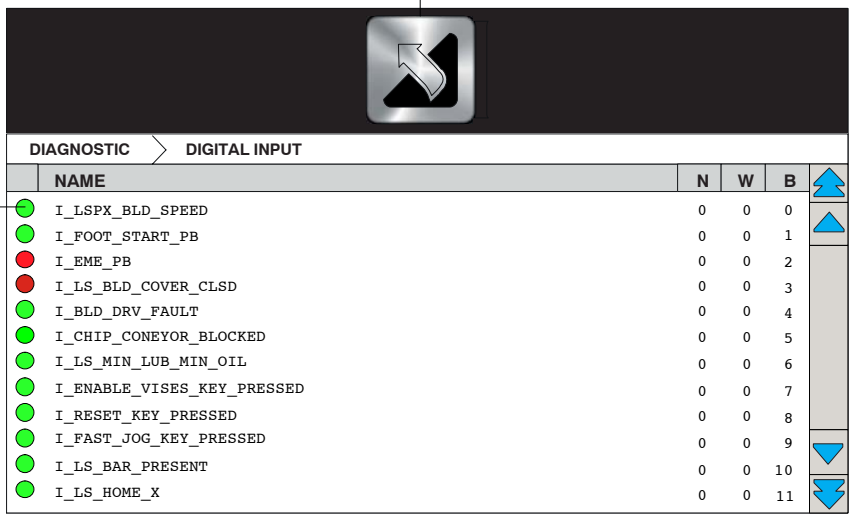

Digital INPUT list

M15–1	**INP 0**	I_LSPX_BLD_SPEED	**BLADE SPEED PROXI**
M15–2	**INP 1**	I_FOOT_START_PB	**START FROM PEDAL BOARD**
M15–3	**INP 2**	I_EME_PB	**EMERGENCY STOP BUTTON OK**
M15–4	**INP 3**	I_LS_BLD_COVER_CLSD	**BLADE GUARD CLOSED LIMIT SWITCH**
M15–5	**INP 4**	I_BLD_DRV_FAULT	**ALARM INVERTER**
M15–6	**INP 5**	I_CHIP_CONVEYOR_BLOCKED	**CHIP CONVEYOR BLOCKED**
M15–7	**INP 6**	I_LS_MIN_LUB_MIN_OIL	**LOW OIL LEVEL**
M15–8	**INP 7**	I_ENABLE_VISES_KEY_PRESSED	**OPEN/CLOSE VISES ENABLE BUTTON**
M18–1	**INP 8**	I_RESET_KEY_PRESSED	**RESET BUTTON**
M18–2	**INP 9**	I_FAST_JOG_KEY_PRESSED	**JOG FAST MOVEMENT**
M18–3	**INP 10**	I_LS_BAR_PRESENT	**BAR PRESENCE LIMIT SWITCH**
M18–4	**INP 11**	I_LS_HOME_X	**ZERO–SETTING LIMIT SWITCH**
M18–5	**INP 12**	I_XB_JStckMinus	**JOYSTICK X–**
M18–6	**INP 13**	I_Y_JStckMinus	**JOYSTICK Y–**
M18–7	**INP 14**	I_Y_JStckPlus	**JOYSTICK Y+**
M18–8	**INP 15**	I_XB_JStckPlus	**JOYSTICK X+**
		I_A_KEY_PRESSED	**KEY CHECK A**
		I_B_KEY_PRESSED	**KEY CHECK B**
		I_C_KEY_PRESSED	**KEY CHECK C**
		I_D_KEY_PRESSED	**KEY CHECK D**
		I_F1_KEY_PRESSED	**KEY CHECK F1**
		I_F2_KEY_PRESSED	**KEY CHECK F2**
		I_F3_KEY_PRESSED	**KEY CHECK F3**
		I_F4_KEY_PRESSED	**KEY CHECK F4**
		I_F5_KEY_PRESSED	**KEY CHECK F5**
		I_F6_KEY_PRESSED	**KEY CHECK F6**
		I_F7_KEY_PRESSED	**KEY CHECK F7**
		I_F8_KEY_PRESSED	**KEY CHECK F8**

Digital Output

This page can be used to check the state of digital outputs. Information is organised in a table:

Box to go back to the initial list of all inputs and outputs

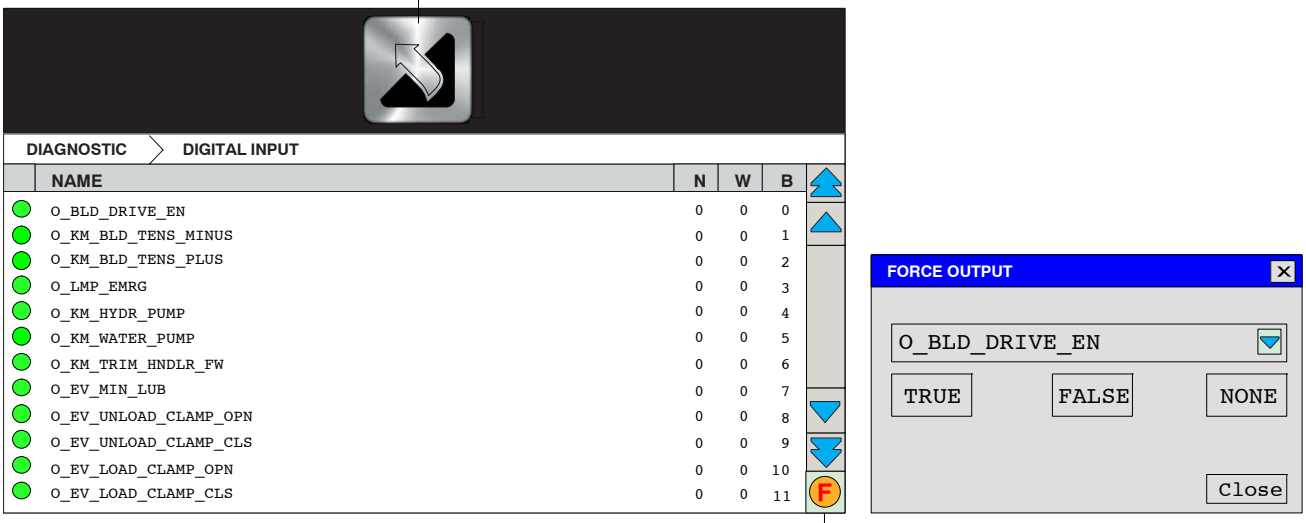

Box for checking the operation of the connected device

Digital OUTPUT list

M2–8	**OUT 0**	O_BLD_DRIVE_EN	**START INVERTER**
M2–6	**OUT 1**	O_KM_BLD_TENS_PLUS	**TENSIONING + KM**
M2–4	**OUT 2**	O_KM_BLD_TENS_MINUS	**TENSIONING – KM**
M2–2	**OUT 3**	O_LMP_EMRG	**FLASHING**
M3–5	**OUT 4**	O_KM_HYDR_PUMP	**UNIT START KM**
M3–4	**OUT 5**	O_KM_WATER_PUMP	**WATER PUMP START KM**
M3–3	**OUT 6**	O_KM_TRIM_HNDLR_FW	**CHIP CONVEYOR FORWARD**
M3–2	**OUT 7**	O_EV_MIN_LUB	**LOW LUBRICATION SOLENOID VALVE**
M4–5	**OUT 8**	O_UNLOAD_CLAMP_OPN	**CUTTING VICE OPENING**
M4–4	**OUT 9**	O_UNLOAD_CLAMP_CLS	**CUTTING VICE CLOSING**
M4–3	**OUT 10**	O_LOAD_CLAMP_OPN	**FEEDER VICE OPENING**
M4–2	**OUT 11**	O_LOAD_CLAMP_CLS	**FEEDER VICE CLOSING**
M5–5	**OUT 12**	O_EV_BLD_UP	**HEAD LIFTING**
M5–4	**OUT 13**	O_EV_BLD_DW	**HEAD LOWERING**
M5–3	**OUT 14**	O_HL_LASER_TRIM	**LASER PROJECTOR**
M5–2	**OUT 15**	O_HL_CUTTING_AREA	**CUTTING ZONE LIGHT**
	OUT 16	O_BUZZER_ON	**CUTTING ZONE LIGHT**
	OUT 17	O_LIKA_ENABLED	**CUTTING ZONE LIGHT**
	OUT 18	O_Y_ENABLE	**CUTTING ZONE LIGHT**

Analog Input

This page can be used to check the state of analogue inputs. Information is organised in a table:

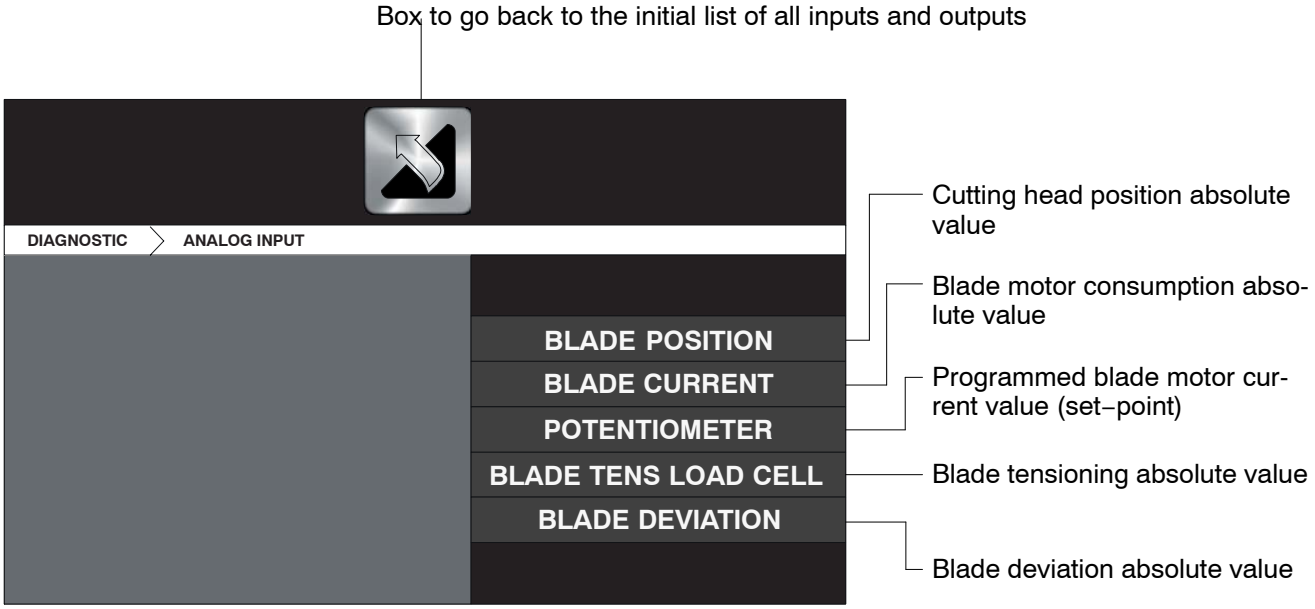

Analog INPUT list

M11 INP 0	HEAD POSITIONING POTENTIOMETER
M24 INP 2	BLADE MOTOR CONSUMPTION
M25 INP 2	FEED FORCE ADJUSTMENT
M27 INP 4	STRAING GAUGE BLADE TENSION
M26 INP 3	BLADE DEVIATION

Analog Output

This page can be used to check the state of analogue outputs. Information is organised in a table:

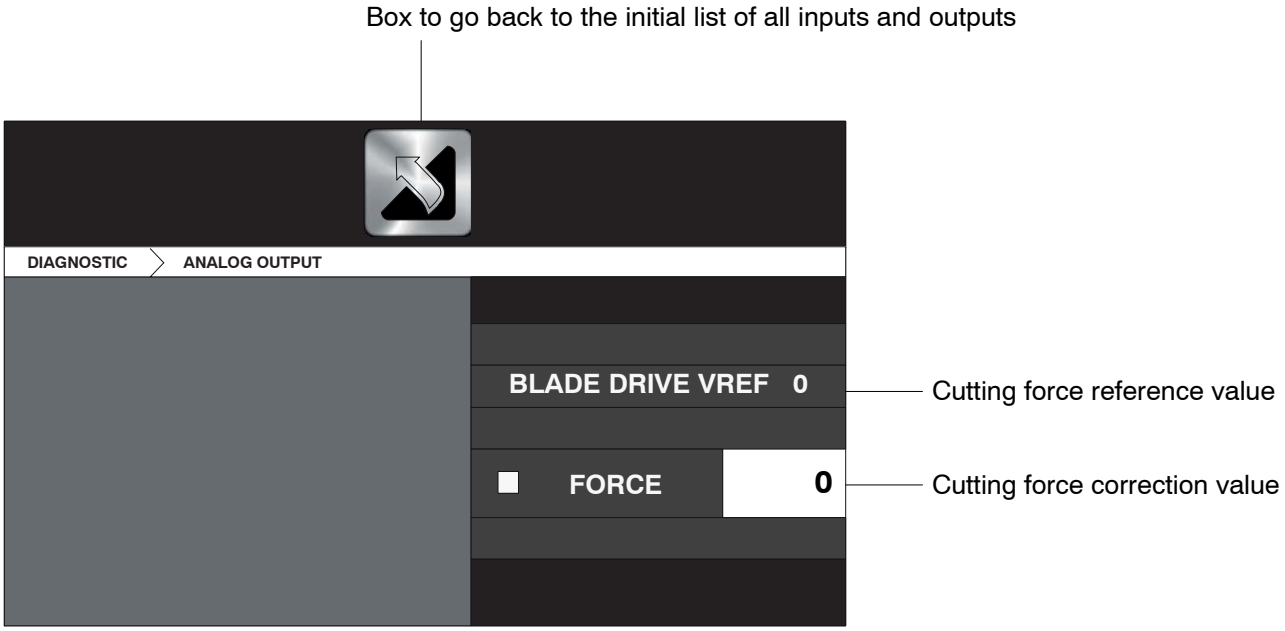

Analogue output list

M10 OUT 1	BLADE SPEED REFERENCE
M12 OUT 2	SPARE

Troubleshooting

In this video page you can check the operation of the X and Y axes and of the belt rotation:

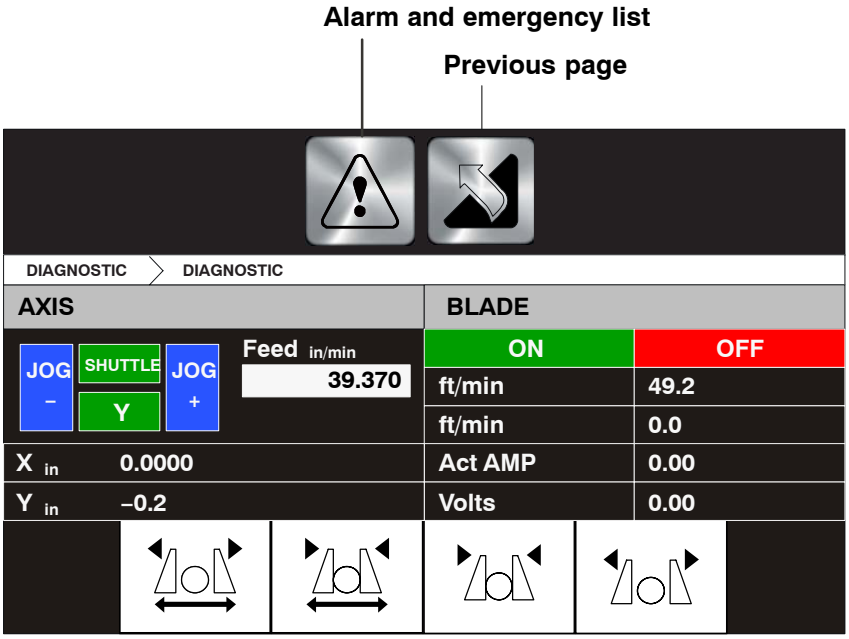

User setup

In this video page you can access the machine data importing or exporting utility, the feeder stroke node correction scheme and the selection of the control interface language.

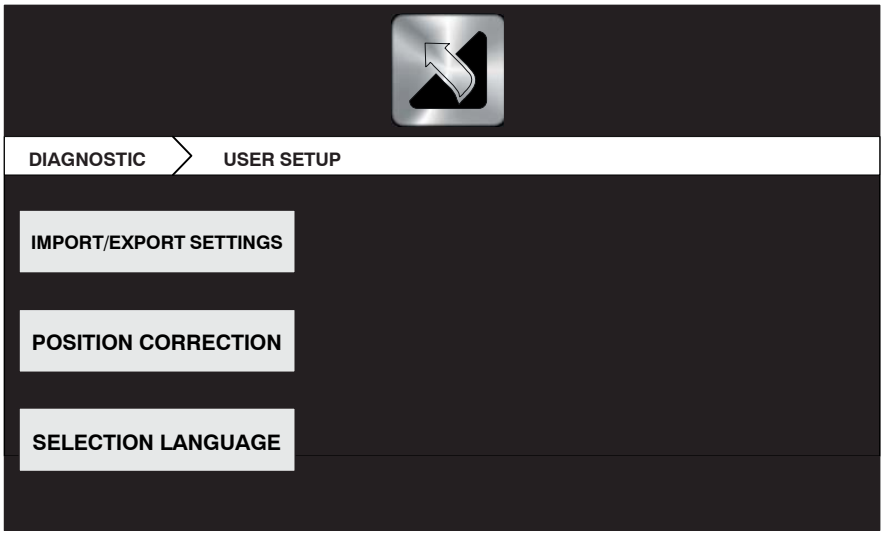

Import / Export settings

You can manage the customised parameters of the machine using an USB key memory. ¿Importing" means transferring the contents of the USB key to the

controller's memory; ¿Exporting" means transferring the controller's memory to the USB memory.

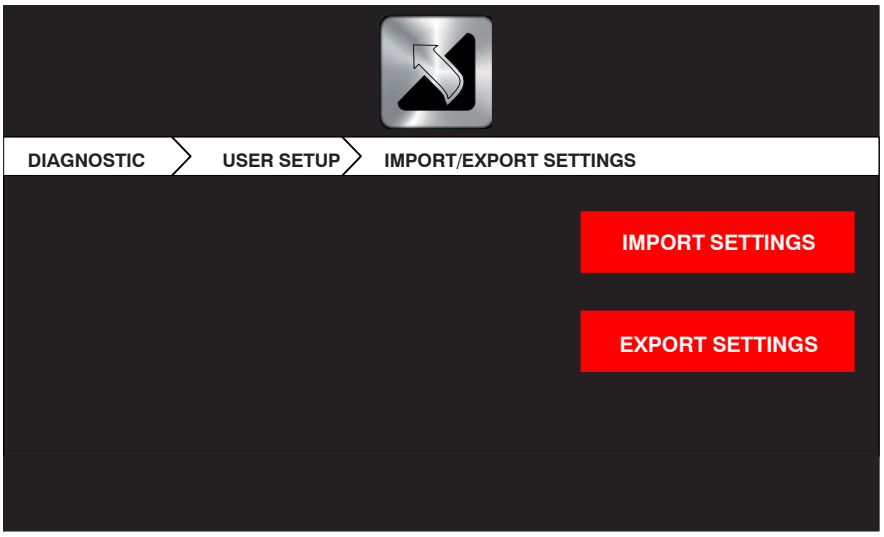

Position correction

In this video page you can correct the complete stroke of the feeder shuttle entering the correction factors at preset values.

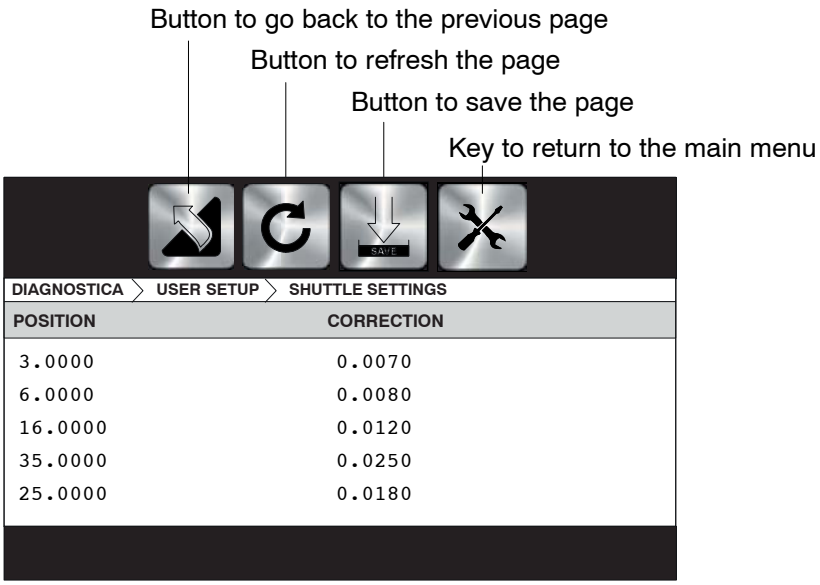

Language selection

In this video page, and in the following ones that can be viewed by pressing the box with the arrow in the right bottom, you can choose the controller interface

language by pressing the corresponding flag. Immediately after selecting the language, the control proceeds autonomously to the reboot of the system.

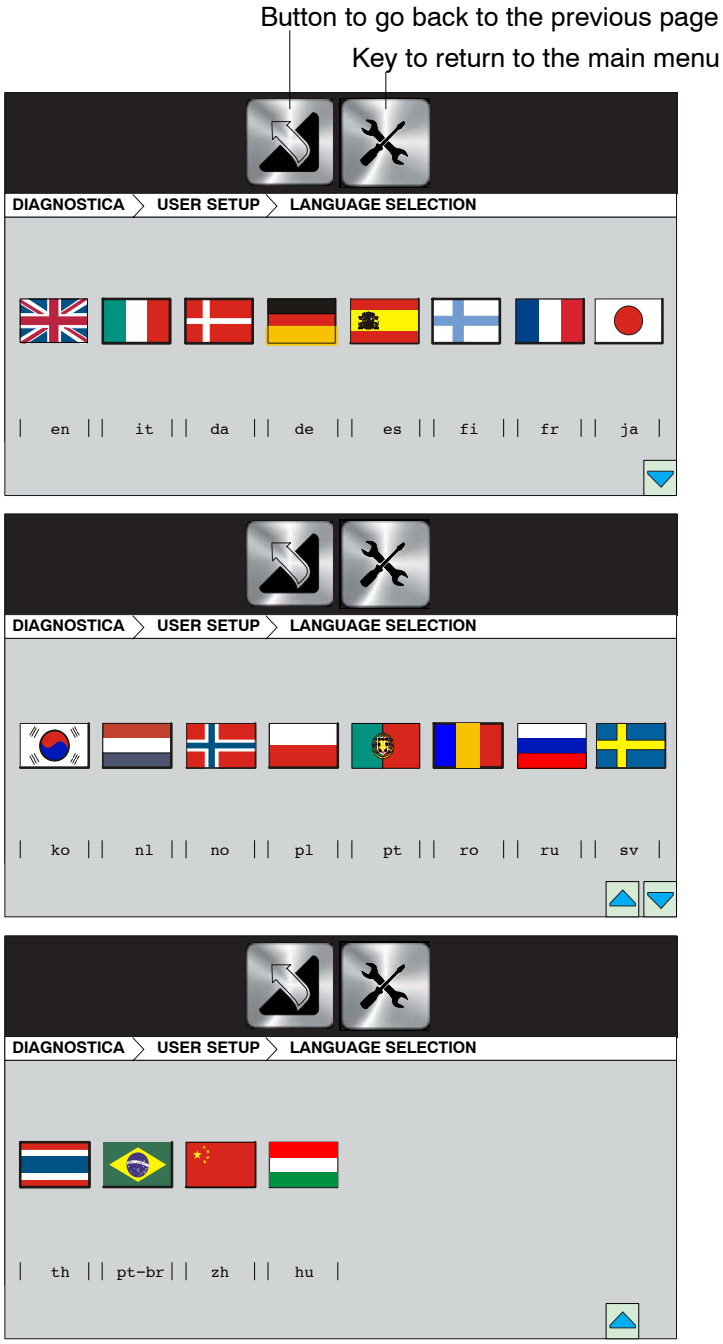

Encoder

In this video page the current values of the potentiometers F (feed) for the cutting head feeding and S (speed) for the belt rotation speed are displayed.

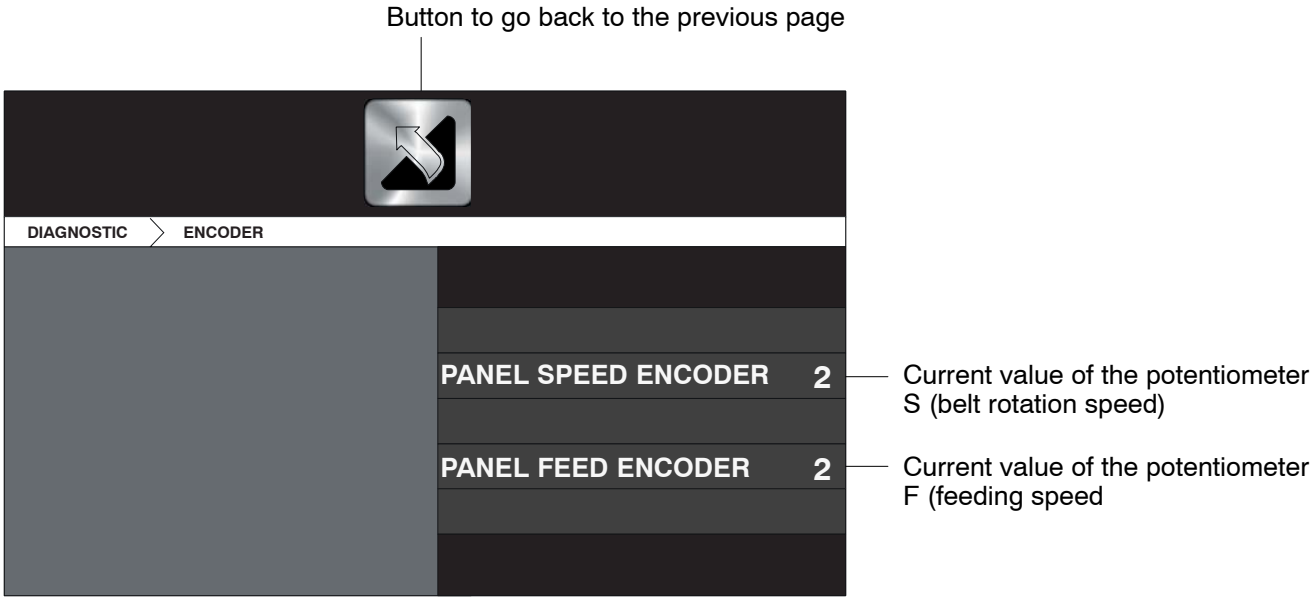

Machine alarms and warning messages

Alarms

The machine's controller notifies the operator of any alarm or emergency condition which may occur during production by way of acoustic and visual signals. This section lists the messages shown on the display.

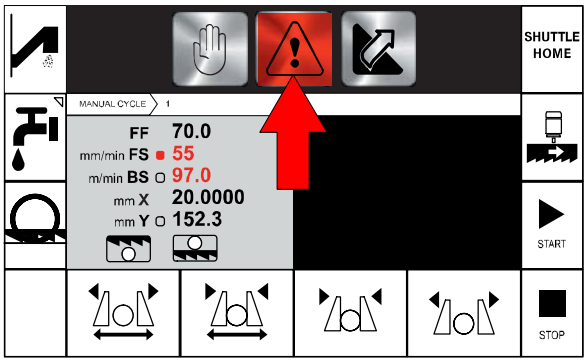

AL1	EMERGENCY: ONE OR MORE ALARMS HAVE TRIPPED - PRESS THE RESET BUTTON	This appears in case of a generic emergency. A specific message follows
AL2	BLADE TENSION MIN-MAX LIMITS MISSING	It is displayed when a mechanical problem occurs in the blade tensioning
AL3	BLADE CUTTING MOTOR OVERCURRENT	It is displayed during the cutting when the value of the motor absorption is too high
AL4	BLADE SPEED BELOW THE MINIMUM	This appears when the blade jams in the cut or breaks ▶ Check blade integrity ▶ Check cutting parameters

AL5	HMI EMERGENCY ⍰ LOGO OR RESERVED PAGE	This appears in case of controller malfunction
AL6	EMERGENCY PUSHBUTTON OR EMERGENCY UNIT ENGAGED	It is displayed when the emergency mushroom button is pressed
AL7	U AXIS NOT AVAILABLE OR NOT OPERATIVE: ENTER THE LOGO PAGE THEN GO BACK TO OPERATIVE PAGES	This appears when the head descent speed adjustment valve is not reset
AL8	XB AXIS NOT AVAILABLE OR NOT OPERATIVE	It is displayed when a feeder shuttle position error occurs
AL9	U AXIS DRIVE FAULT	This appears in case of head descent adjustment valve malfunction
AL10	XB AXIS DRIVE FAULT	This appears when there is a head revolution drive malfunction
AL11	ACTIONNEMENT DE L'AXE XB EN AVARIE	It is displayed when the oil level in the min. lubrication system lowers. ▶ Top the oil up in the tray till restoring the level.
AL12	SAFETY BLADE COVER OPEN @ BLADE CHANGE MODE DISABLED	This message is displayed if the blade guard is opened, for example, to change the blade. ▶ Make sure the blade guard is closed. ▶ Check the safety limit switch. ▶ Check the connections.
AL13	XB AXIS ROTATION ENCODER LOCKED	This appears in case of head revolution problem
AL14	BLADE MOTOR OR DRIVE FAULT	This is shown when the blade motor inverter does not work correctly
AL15	BLADE AND VERTICAL-CLAMP INTERFERENCE SWITCH ENGAGED	It is displayed when the position of the vertical vice is not compatible with the vertical lowering of the bow
AL16	FORWARD SOFTWARE LIMIT SWITCH ABOVE START POSITION (FHLS < YPOS)	This message is displayed when the cutting start position is lower than the previous position saved for the cutting end position. ▶ Save both the RHLS and FHLS positions again.
AL17	LOAD PARAMETER FAILED: RESTART MACHINE	This appears when the parameter reading procedure is not successful
AL18	BLADE POSITION ERROR: CHECK ANALOG INPUT	This appears when the potentiometer is broken or sends a message which is not compatible with the machine

AL19	LASER ENGAGED AT START CYCLE	Not operating on this machine model
AL20	JOG X NOT POSSIBLE WITH BOTH CLAMPS CLO-SED	It is displayed when attempting to move the materi-al through the feeder shuttle with both vices closed.
AL21	OUT OF STOCK	It is displayed when the cutting material being fed runs out
AL22	CALCULATING LENGTH ERROR	It is displayed when a calculation error of the length to be fed occurs
AL23	X AXIS HOMING NOT COMPLETED PERFORM THE HOME AXIS MANUALY	It is displayed when a feeder shuttle position error occurs
AL24	BLADE BROKEN	It is displayed when the blade breaks
AL25	CYCLE STARTING WITH BLADE NOT A FCTI	It is displayed when a cutting cycle is started with head not at RHLS (rear head limit switch)
AL26	BLADE DEVIATION MAX	It is displayed when an excessive blade deviation occurs while machining
AL27	BLADE DEVIATION MIN	It is displayed when a limited blade deviation occurs while machining
AL28	STOCK ALARM	Available
AL29	STOCK ALARM	Available
AL30	STOCK ALARM	Available
AL31	STOCK ALARM	Available

Warning messages

Tap on the box shown on the figure to see warning messages:

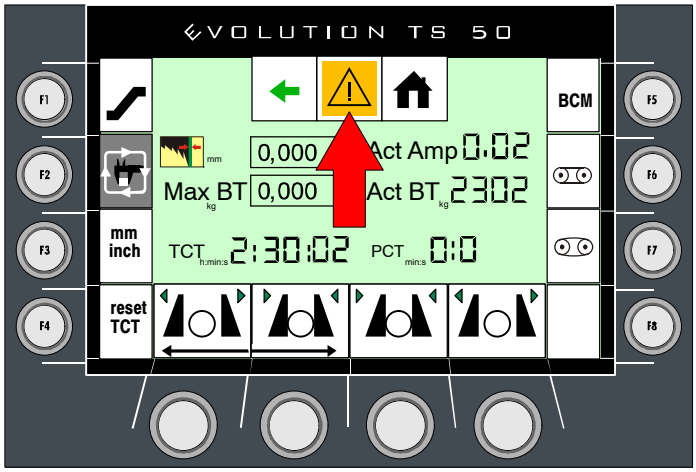

WR1	CHECK MANUAL CUT START CONDITIONS: NO ALARMS, BLADE ENABLED, BLADE ON FCTI, FRONT VISE CLOSED	It is displayed when trying to start the cycle without having enabled the blade motor before
WR2	SEMIAUTO CUT SEQUENCE IN PROGRESS	It is displayed when the cutting cycle is started with the grip during a semi–automatic cycle.
WR3	POSITIONING SEQUENCE IN PROGRESS	It is displayed when the feeder shuttle is moving
WR4	MINIMUM LUBRIFICATION: OIL REACHED THE MINIMUN LEVEL	This appears when there is no oil for minimum lubrication
WR5	FORWARD SOFTWARE LIMIT SWITCH ABOVE BACKWARD ONE (FCTA > FCTI)	This appears when the RHLS and RHLS are not coherent
WR6	HYDRAULIC OIL PUMP SELF TURNING OFF TRIGGER	It is displayed when the hydraulic pump shutdown timer is activated due to machine inactivity
WR7	INHIBITED COMMAND	This appears when an incorrect operation is attempted
WR8	CHECK CUT START CONDITIONS: NO ALARMS, BLADE ENABLED, BLADE ON FCTI, NUMBER PIECES PROGRAMMED TERMINATED (RESET COUNTER)	It is displayed when: the number of cut pieces must be zeroed; or the blade motor must be enabled; or it is necessary to set the cutting length (cutting length > 0).
WR9	AUTO FEED REDUCING CORRECTION TRIGGERED BY AN OVERCURRENT	This appears when the blade motor current exceeds the setting and correction is applied
WR10	REGULACIÓN VELOCIDAD DE BAJADA CABEZAL ACTIVA	It is displayed when the set blade lowering value is too low

WR11	THERMAL KO	This appears when a thermal switch trips in the control panel
WR12	CHIP CONVEYOR BLOCKED	This appears when the chip ejector is blocked
WR13	JOG WITHOUT HOMING	It is displayed when the x axis must be zeroed.
WR14	WAIT BLADE SPEED REACHED	This appears when the blade setting is too low
WR15	END OF CUTS	It is displayed at the end of the programmed cuts
WR16	END OF QUEUE	It is displayed at the end of the performed program queue.
WR17	BLADE DEVIATION WARNING LEVEL	It is displayed when the blade deviation value has reached the caution level
WR18	WARNING STOCK	Available
WR19	WARNING STOCK	Available
WR20	WARNING STOCK	Available
WR21	WARNING STOCK	Available
WR22	WARNING STOCK	Available
WR23	WARNING STOCK	Available
WR24	WARNING STOCK	Available

WR25	WARNING STOCK	Available
WR26	WARNING STOCK	Available
WR27	WARNING STOCK	Available
WR28	WARNING STOCK	Available
WR29	WARNING STOCK	Available
WR30	WARNING STOCK	Available
WR31	WARNING STOCK	Available

Optional

11

This chapter provides a list of the available accessories that can be fitted to this machine, along with assembly instructions.

Optional

Blade

The blades that can be used on this machine include:

- 4640x34x1,1 bimetal blade for solid and section materials;

Roller table

- K500 roller table module for feed side, 1500 mm;

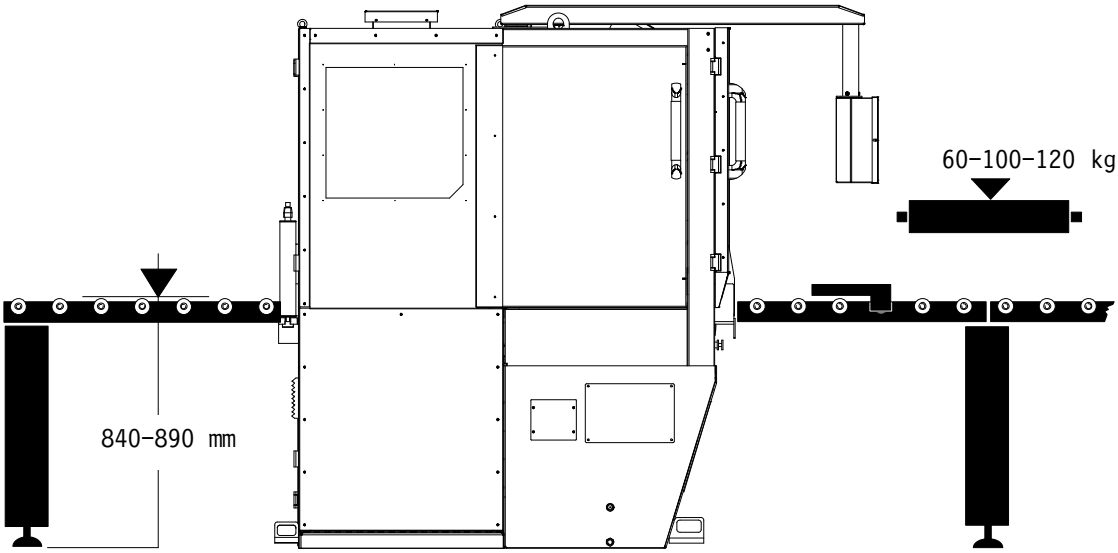

- K500 roller table for discharge side, 1500÷6000 mm;

Can of emulsible oil

5 l can of emulsible oil.

Minimal lubrication system

This device was designed to improve lubrication of the tool during cutting.

▶ An instruction book is supplied with the kit to explain how to install this optional unit.

Accessories available on request

These optional extras must be fitted in the manufacturer's factory, inasmuch as they could be difficult for the user to mount by himself. A list of these parts is provided below:

- laser beam pointer and working lamp;
- vertical hydraulic vices for cutting bundles (320x320 mm);
- system for the automatic backing of the feeder vice rear jaws.

Software setting for the options

To access the options page of the software program, press the box shown in the figure:

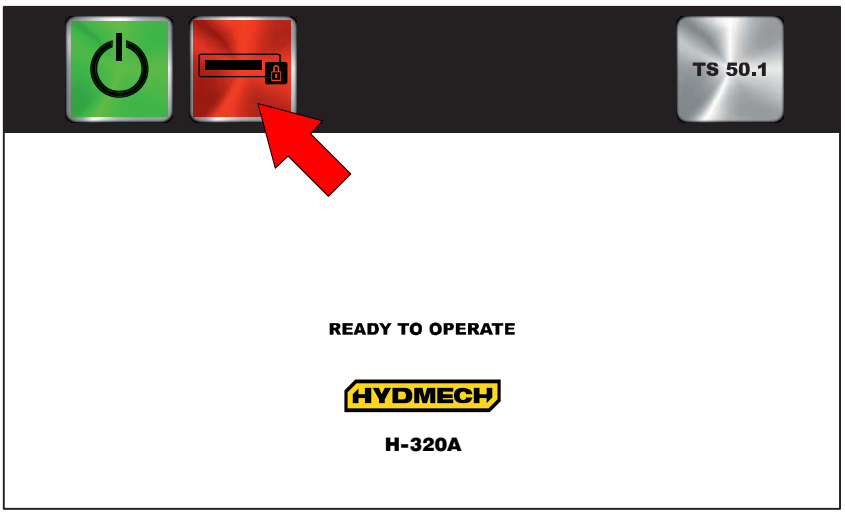

▶ The password entry box will open. Tap the box to open the keypad. Enter 734533.

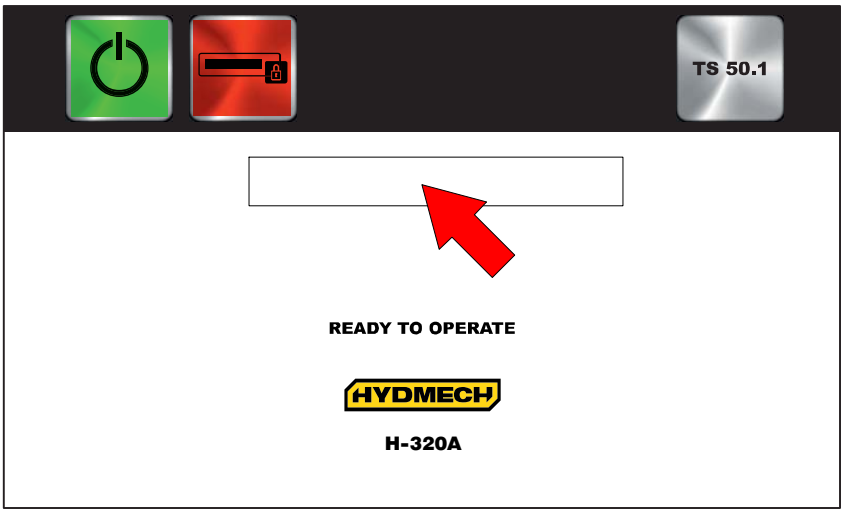

▶ Tap on the box shown in the figure.

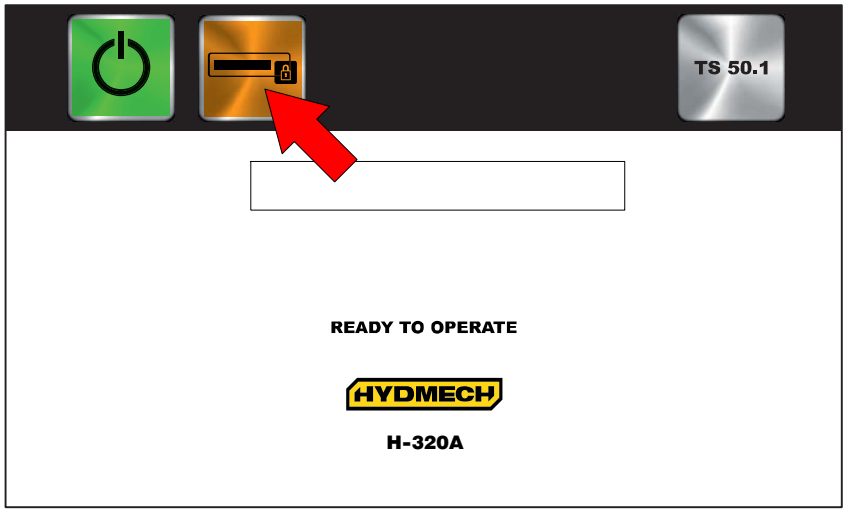

▶ Tap on the box shown in the figure.

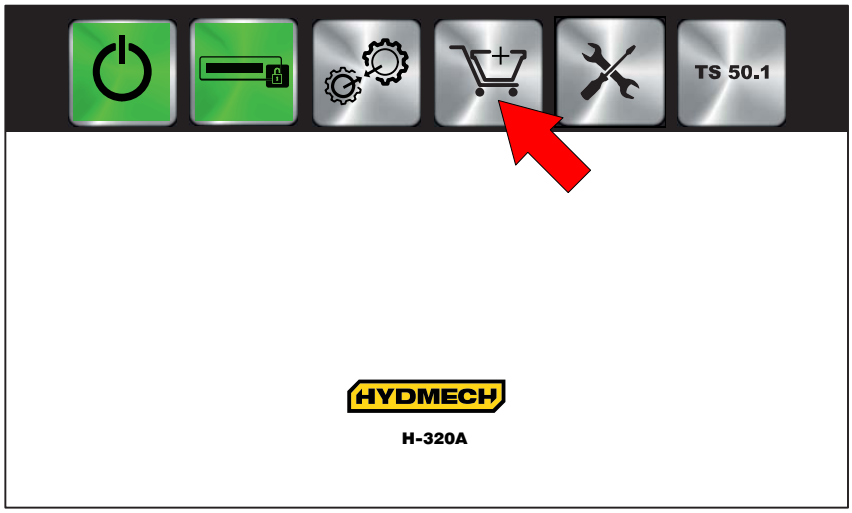

The machine displays the list of options that can be installed and the parameters to be set:

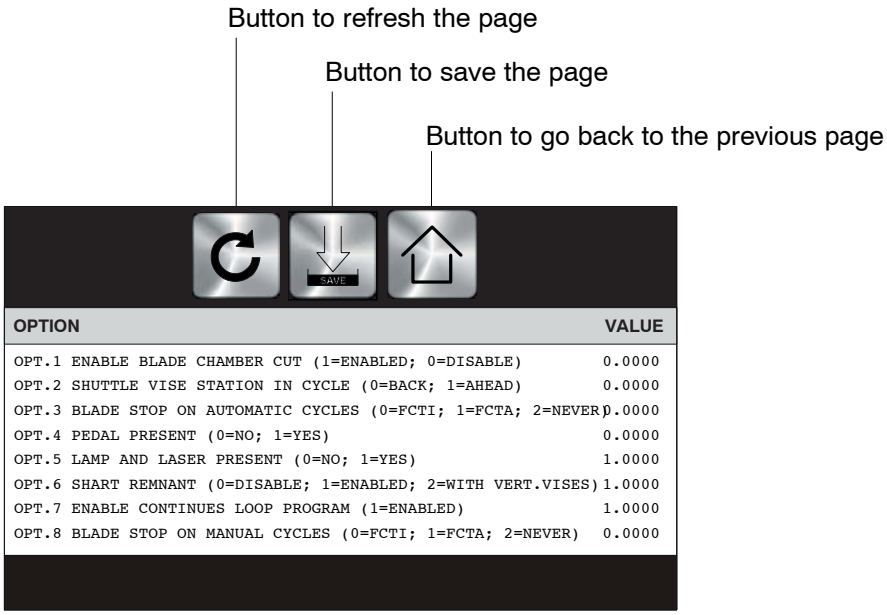

OPTIONAL:		
Quantity	**Parameter / Description**	**Value**
OPT.1	**CLEAN CUT ENABLEMENT(1=YES \; 0=NO)** Enables or disables the clean cut function.	0.0000
OPT.2	**VICE STOPPING IN CYCLE (1=FWD.\; 0=BCKW.)** Sets the vice stopping during the cycle in forward or rear position.	0.0000
OPT.3	**BLADE STOP IN AUTOMATIC CYCLE (0=ON RHLS\; 1=ON FHLS\; 2=NEVER)** Enables the blade stop when the head is in RHLS, FHLS or NEVER.	1.0000
OPT.4	**PEDAL PRESENT (0=No\; 1=Yes)** Sets the presence of the pedal board.	0.0000
OPT.5	**LAMP AND LASER PRESENT (0=No\; 1=Yes)** Sets the presence of the lamp and of the cutting laser.	0.0000
OPT.6	**ZERO SCRAP CYCLE (0=No\; 1=Yes)** It allows to activate or deactivate the zero scrap cycle.	1.0000
OPT.7	**CONTINUOS CYCLE QUEUE ENABLEMENT (1=ENABLED)** Enables or disables continuos cutting queue cutting cycle	1.0000
OPT.8	**BLADE STOP IN MANUAL CYCLE (0=ON RHLS\; 1=ON FHLS\; 2=NEVER)** Enables the blade stop when the head is in RHLS, FHLS or NEVER.	1.0000

Mep spa guarantees that the sold product is free from defects making it unsuitable for its intended use or significantly decreasing its value.
The guarantee shall not apply if the buyer was aware of defects in the product when buying it or if defects were clearly recognizable.
Regulations by the Italian law shall apply to this article.

MEP