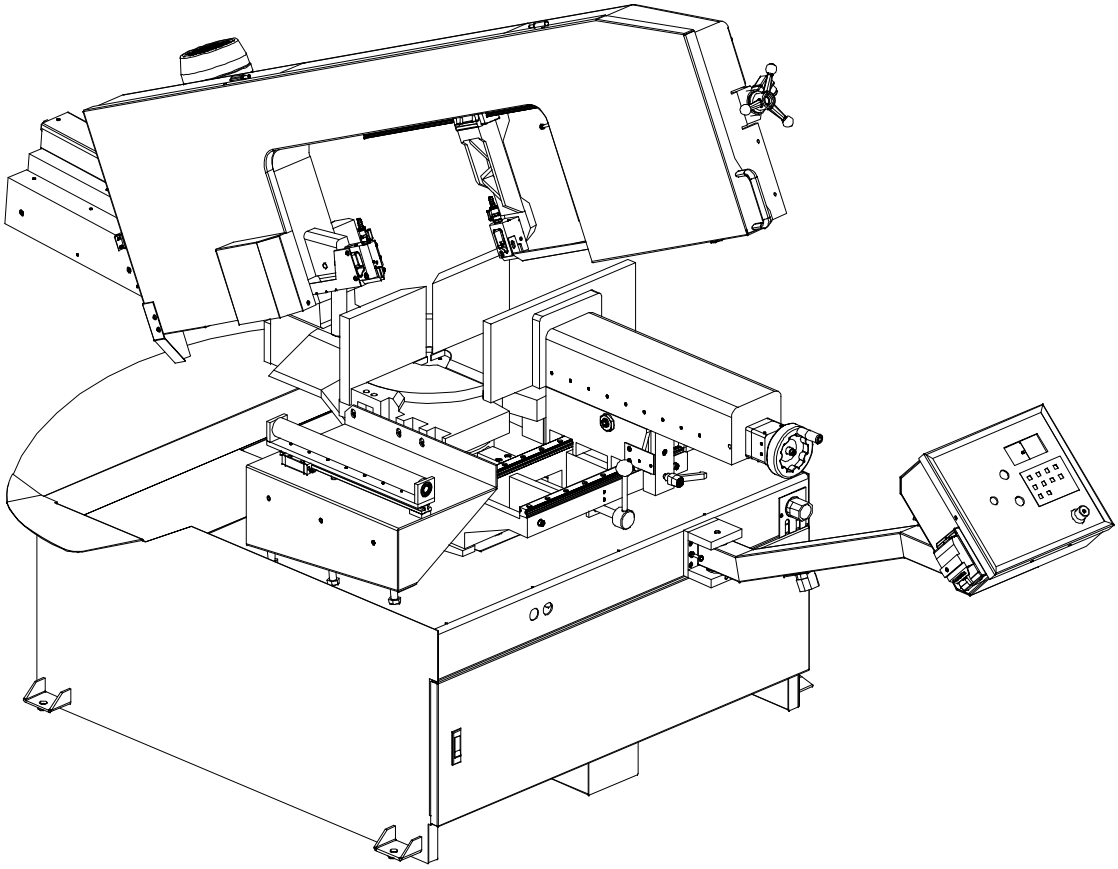

USE AND MAINTENANCE MANUAL

EN **DM-1318P**

YEAR OF MANUFACTURE: _____

EN

”CE” CONFORMITY DECLARATION
(according to EEC MACHINES DIRECTIVE 2006/42/CE annex II A)

The manufacturer:

MEP S.p.A.
Via Enzo Magnani, 1
61045 Pergola (PU) ITALIA
Tel. 072173721 - Fax 0721734533

Hereby declares that the bandsawing machine:

Machine Type:	**SAWING MACH**
Machine model:	**DM-1 3P**
Serial number:	
Year of manufacture:	

is in specification wi e followin irec

- **DIRECT E EEC M HIN S E ECTIVE 006/42/CE**
- **DIRE VE 20 5/C ”LV ”**
- **DI CTIVE 2 4/1 /CE EMC”**
- **Lgs. 17/2010**

Respon e of a T nical File
alter Di G anni

c/o MEP SPA
Via Enzo Magnani, 1
61045 - Pergola - PU - ITALY

Ma ging Di tor
(Wil Giaco tti)

FAC SIMILE

Introduction and technical specifications 1- 1
Foreword 1- 1
Machine presentation 1- 1
Machine specification 1- 2
Dimensions 1- 4
Functional parts 2- 1
DM- 1318P model 2- 1
Cutting head 2- 2
Vice 2- 3
Control Panel 2- 3
Turntable 2- 4
Fixed platform 2- 4
Motion- variator- reducer unit 2- 5
Base 2- 6
Safety and accident prevention 3- 1
Use of the machine 3- 1
General recommendations 3- 2
Recommendations to the operator 3- 3
Machine safety devices 3- 5
Reference standards 3- 5
Protection against accidental contact with the blade .. 3- 6
Electrical equipment 3- 7
Emergency devices 3- 7
Noise level of the machine 3- 9
Noise level measurement 3- 9
Noise level values 3- 9
Vibration emission 3- 10
Electromagnetic compatibility 3- 10
Machine installation 4- 1
Packaging and storage 4- 1
Anchoring the machine 4- 4
Minimum requirements 4- 4
Check list 4- 5
Connection to the power supply 4- 5
Earth grounding procedure 4- 7
Description of machine operation 5- 1
Control panel description 5- 1

Basic instructions for carrying out a cutting operation cycle 5- 3
Manoeuvring the cutting head 5- 3
Clamping the work piece in the vice 5- 4
Rapid vice positioning 5- 5
Rapid vice translation 5- 6
Width of cut 5- 7
Preliminary check list for cutting operation 5- 8
Semi- automatic operating cycle 5- 8
Execution of inclined cuts 5- 11
Loading side rollerway position 5- 11
Angled cuts 45° to the left 5- 12
Angled cuts 60° to the left 5- 13
Angled cuts 45° to the right 5- 15
Angled cuts 60° to the right 5- 16
Diagrams, exploded views and replacement parts 6- 1
Hydraulic diagram 6- 2
Standardised Wiring Diagrams - 240 V (CENELEC Standard) 6- 6
Standardised Wiring Diagrams - 480 V (CENELEC Standard) 6- 38
IUD/IUV card 6- 70
Exploded views 6- 72
Motor unit 6- 72
Driving pulley unit 6- 74
Front flywheel assembly 6- 77
Fixed worktable 6- 79
Cutting head cover 6- 81
Hydraulic control unit 6- 84
Cylinders 6- 86
Base assembly 6- 88
Control panel 6- 90
Optional Discharge side adaptor 6- 92
Vice assembly 6- 94
Optional Discharge side adaptor 6- 96
Optional: Cut angle viewer 6- 98
Adjustments 7- 1
Displaying and editing the set- up parameters 7- 1
Set language parameter 7- 2
Set parameter for machine type 7- 2

Semiautomatic- Dynamic and Manual operation setting (optional) 7- 2
Pedal control setting (optional) 7- 2
Optional inverter presence settings 7- 3
Blade speed proximity settings 7- 3
Minimal lubrication system settings 7- 3
FCTI / FCTA digital output enabling setting 7- 3
Blade stop setting 7- 3
Cutting vice opening setting 7- 4
Cutting vice opening/closing time setting 7- 4
Machine maximum power input setting 7- 4
Measurement unit setting 7- 4
Setting minimum blade tensioning 7- 4
Display backlighting time setting 7- 5
Cutting head stroke 7- 5
Software version and total use time of the machine . . . 7- 8
Adjusting the display brightness 7- 8
Machine working pressures 7- 9
Hydraulic pressure 7- 9
Cutting head 7- 10
Blade tensioner slide play adjustment 7- 10
Blade guide components 7- 11
Blade guide heads 7- 11
Blade steady buttons 7- 11
Blade guide plates 7- 11
Blade 7- 14
Tool changeover 7- 14
Blade perpendicularity 7- 16
Blade orthogonality 7- 17
Rotation axis control 7- 18
Maintenance and choice of consumables 8- 1
The role of the operator 8- 1
Maintenance requirements 8- 2
General maintenance 8- 2
Daily 8- 2
Weekly 8- 2
Monthly 8- 3
Maintenance of working parts 8- 3

Lubrication 8- 3
Consumable materials 8- 4
Oils for oleopneumatic circuit 8- 4
Oils for hydraulic circuit 8- 4
Oil for lubricant/coolant fluid 8- 5
Oils for spray mist system (optional) 8- 5
Cutting speed and choice of tools 9- 1
Cutting speed 9- 1
Standard machine 9- 1
Choice of blade 9- 2
Saw tooth pitch 9- 2
Cutting speed and downstroke speed 9- 2
Types of swarf: 9- 3
Lubricant/coolant fluid 9- 4
Blade structure 9- 4
Blade types 9- 5
Conventional rake 9- 5
Positive rake 9- 5
Variable pitch 9- 5
Variable pitch blades with 0° cutting angle 9- 6
Variable pitch with positive rake (from 9 to 10 degrees) 9- 6
Set: 9- 6
Standard or splayed set 9- 6
Undulated set 9- 7
Alternating grouped sets 9- 7
Alternating set 9- 7
Blade selection table relating to cutting speed and downstroke speed 9- 8
Classification of steels 9- 9
Classification of steels 9- 10
Troubleshooting 10- 1
Troubleshooting blade and cutting problems 10- 1
Troubleshooting 10- 7
Diagnostics system 10- 8
Machine alarms and emergencies 10- 10
Accessory Installation 11- 1
Accessories that can be fitted by the user 11- 1
Blade 11- 1

Can of emulsible oil 11- 1
Bar support 11- 1
Roller table 11- 2
Can of emulsible oil 11- 2
Roller plane adapter, loading side 11- 2
Roller plane adapter, unloading side 11- 3
Minimal lubrication system 11- 3
Additional pedal control with emergency device 11- 4
Warranty 11- 7

Introduction and technical specifications

1

Foreword

MEP S.p.A.,in response to modern production techniques, has developed the new **DM-1318P**.
This work tool has been designed to satisfy the wide range of cutting needs of a modern workshop with simplicity and reliability, while at the same time complying with all EEC safety standards.
The **DM-1318P** is structurally rigid, silent and safe: it produces a minimum of waste while its great versatility makes it suitable for cutting various materials such as stainless steel light alloys, aluminium, copper and bronze at high speed and with high precision.
Its high cutting capacity, combined with the possibility of making inclined cuts from 60° left to 60° right, make this model the ideal solution for satisfying the wide strange of cutting needs of machine shops, turneries, structural steel shops and engineering workshops.
We congratulate our clients on having chosen this product, which will give effective and faithful service for many years, especially if the instructions contained in this use and maintenance manual are carefully followed.

Warning This band saw has been exclusively designed to cut metals.

Machine presentation

Functioning is SEMI-AUTOMATIC.
In **Semi-automatic** mode, after setting the head cutting stroke on the control panel and the head downstroke speed, the operator positions the vice 2÷3 mm from the workpiece and presses the start button (or optional foot pedal if fitted) on the control panel to start up the band saw. The vice then clamps the material, the head lowers, cuts the piece and returns to its start position and the vice opens again.

1. The cutter vice closes	2. The head lowers until the cut is made (FCTA)	3. The head returns to start position (FCTI)	4. The cutter vice opens
	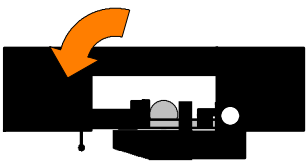	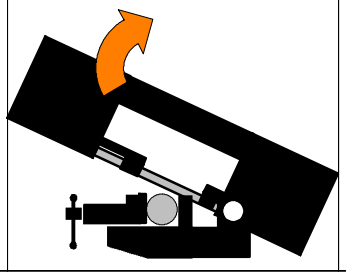	

Machine specification

The anodised aluminium name plate is riveted on the side of the machine; the same data are reproduced on the declaration of conformity included with this use and maintenance manual.

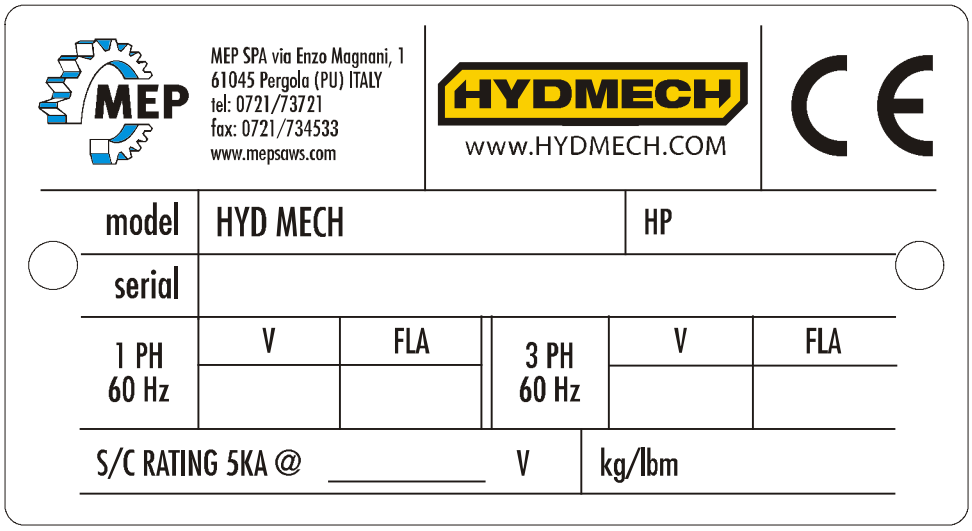

N.B. When communicating with the Technical Service department, the model, serial number and year of manufacture of the machine must be quoted.

CUTTING SPEEDS		
Blade rotation speed	mt/min	15 ÷ 100

BAND SAW		
Rated size	mm	4500 x 27 x 0,9
Max/min blade length	mm	4500 ± 20
Blade height	mm	27
Blade width	mm	0,9
Band saw tension	kg	1250

Attention When choosing the cutting tool, if its dimensions do not correspond to those included in the ”Rated size” section, check that the dimensions at least fall within the admissible max/min specifications.

RATED ELECTRICAL POWER		
Head spindle motor	kW	1,5
Electric coolant pump motor	kW	0,1
M1 power pack motor	kW	0,37
Max installed power	kW	1,97

WORKING PRESSURE		
Working pressure	Bar	26/30
Working pressure of vice with optional adjuster	Bar	16/25

LUBRICANT/COOLANT FLUID AND OIL		
Oil for blade tensioner unit (optional)	capacità Lt	2,5
Lubricant/coolant fluid (oil concentration 5-6%)	capacità Lt	82

VICE		
Vice max. opening	mm	455

SPINDLE MOTOR				
No.of poles	**Current (Volts)**	**Absorption (Amps)**	**Power (Kw)**	**rpm**
4	400	4	1,5	1410
Stator wound with enamelled copper wire, class H 200° C.				
Class F insulation (limit temperature TL 155° C).				
IP 55 protection rating (total against contact with live parts, water sprayed from all directions, with shaft oil seal).				
Conforming to CEI norms, publication: IEC 34 of 01/07/1985.				

N.B. Example of class F insulation: in air-cooled machines at an ambient temperature of 40 C (according to CEI 2-3 and IEC 85), the allowable overtemperature is 100 C (where 100 C represents the allowable DT).

ELECTROPUMP MOTOR Single phase; Frequency 50 Hz.					
Voltage (Volts)	**Absorption (Amps)**	**Power (Kw)**	**rpm**	**Delivery rate lt/min**	**Head (mt.)**
230	0,30	0,09	2800	24	1,5
400	0,18	0,09	2800	24	1,5
Protection rating IP 55.					
Conforming to CEI norms, publication: IEC 34 of 01/07/1985.					

CUTTING CAPACITY			
Section	○	H	⊔
0°	330	320	450x320
45° ◖	320	300	300x300
60° ◖	210	200	200x200
45° ◗	320	300	300x300
60° ◗	210	200	200x200

Dimensions

MACHINE INSTALLED		
Work table height	mm	880
Weight	kg	1110

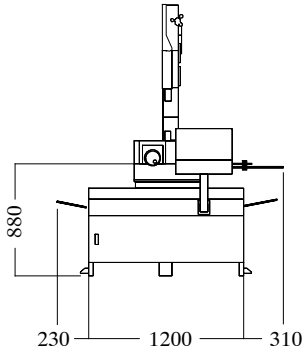

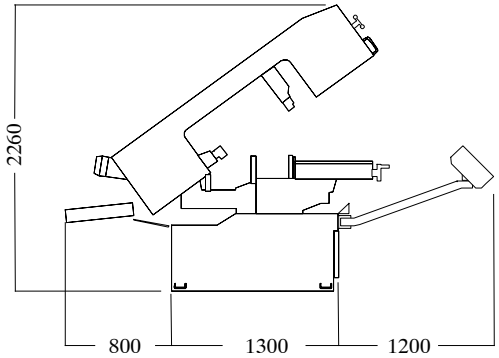

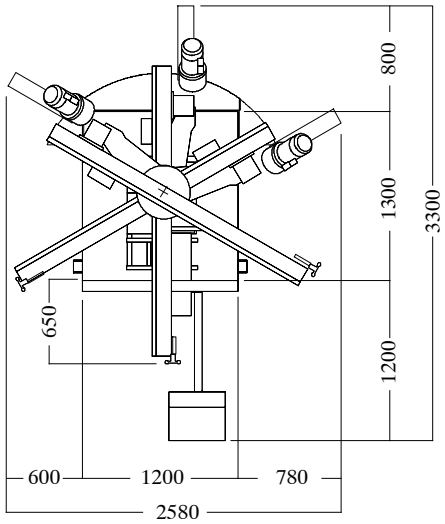

PACKED WEIGHT		
Wooden cage and pallet	kg	130
Wooden pallet	kg	70

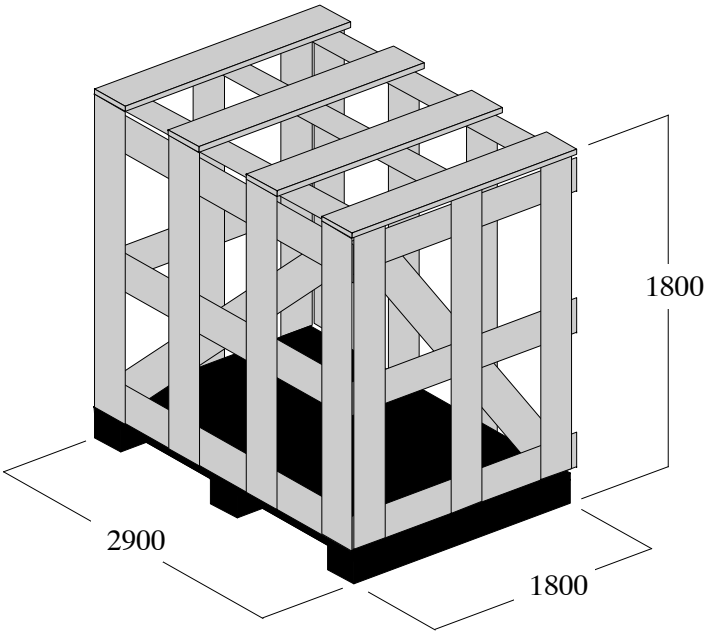

Functional parts

2

DM-1318P model

In order for the user to move towards a full understanding of how the machine works, which is described in detail in the chapter 5, this chapter deals with the main units and their locations.

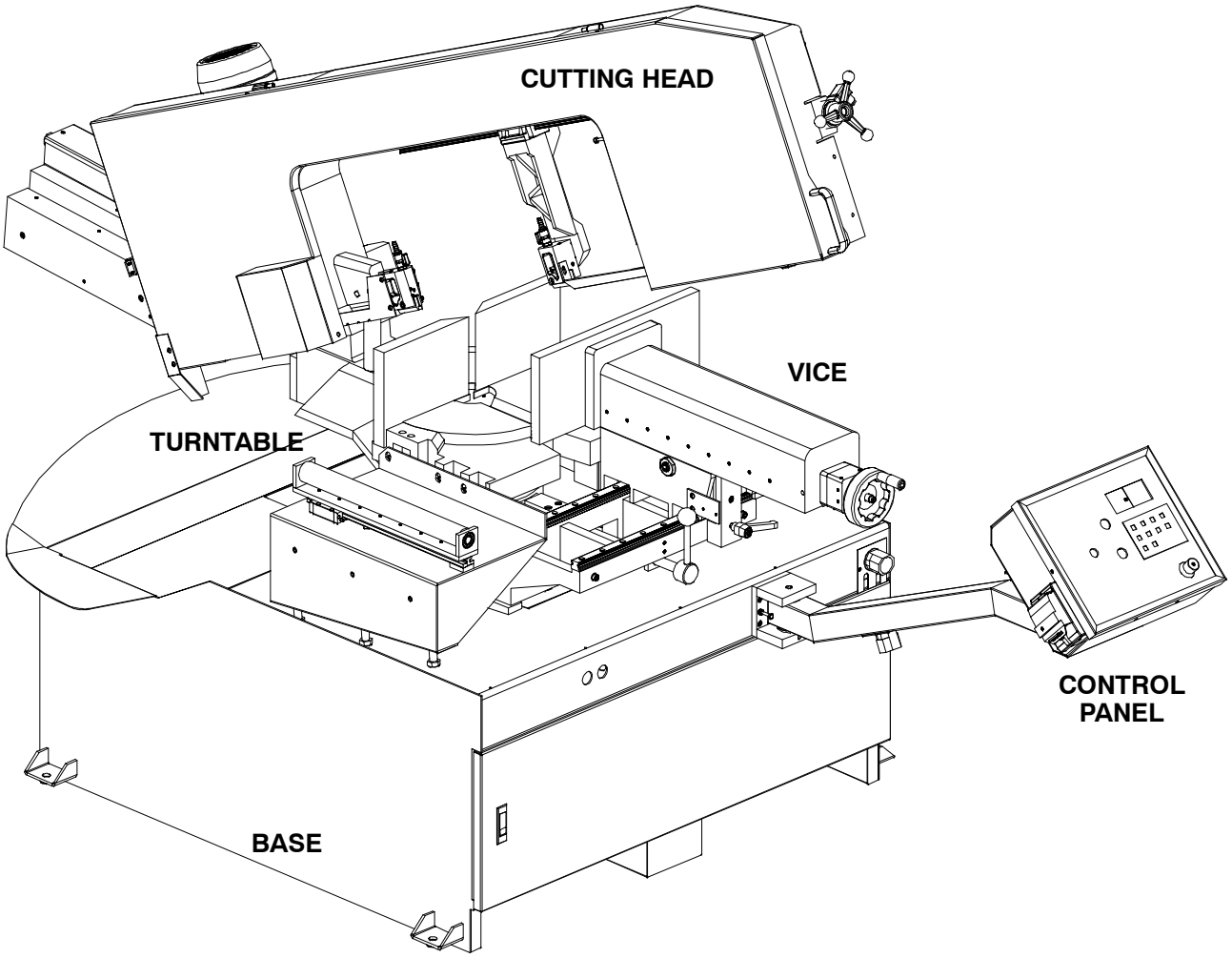

Cutting head

The oerating head is the element that performs the cut and is made up of a bow made from a fusion of cast iron onto which the band, the band guide elements, the band tensioning unit and the mechanical speed variator are mounted. The operating head is restricted in its movements by the articulated joint on the rotatng platform.

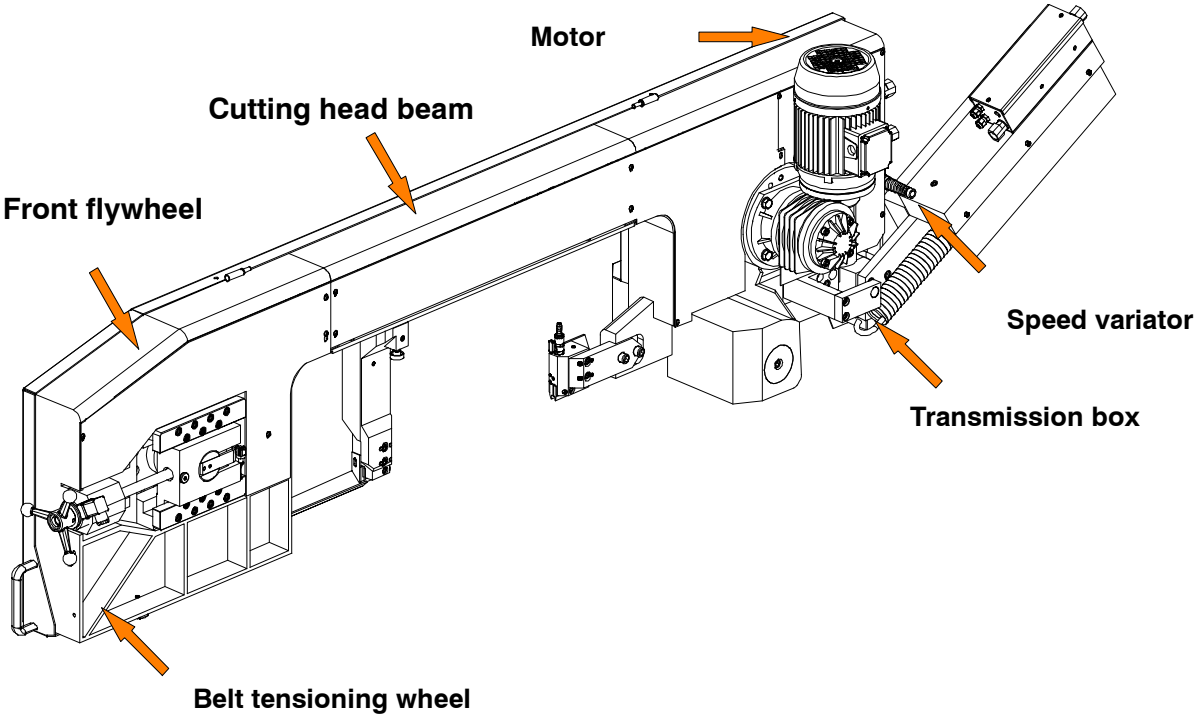

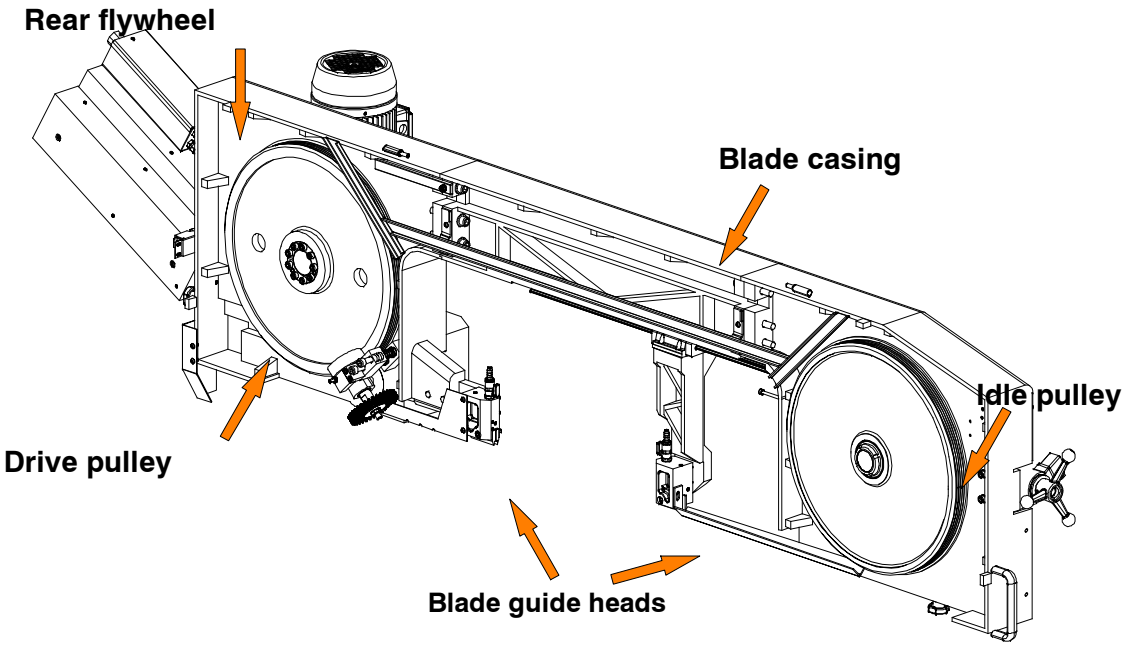

Vice

The vice is the unit that clamps the workpiece during cutting. It consists of a vice support, commonly known as a “lead nut”, fixed to the work table, and a lead screw with a sliding support on which the mobile jaw is mounted. It can run transversely with respect to the cutting surface, or lengthways, for opening and closing, on the linear guides and slides with recirculation of pre- loaded spheres. The vice is manually neared to the material to be cut using a hand- wheel and blocking is performed using a hydraulic cylinder (in the AV version).

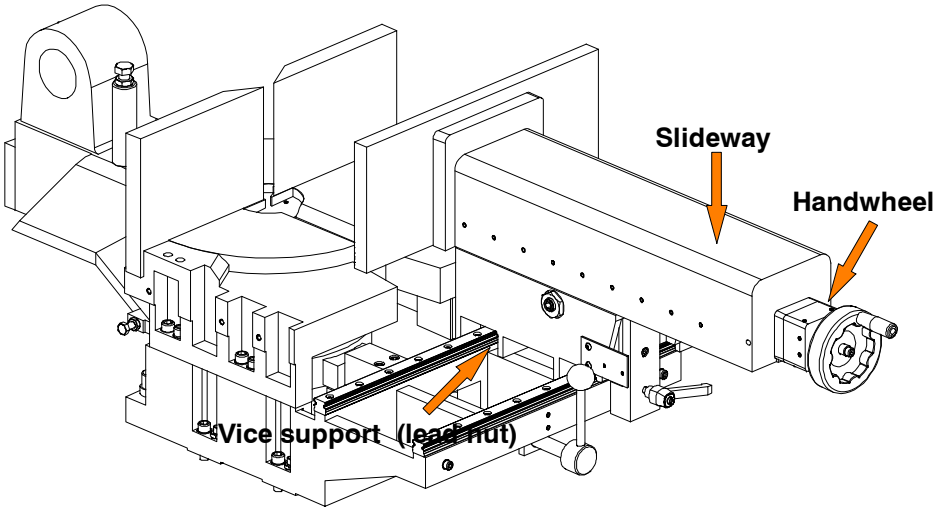

Control Panel

The control panel has a protection rating of IP 54 and contains the electronic equipment. Access to the control panel is protected by a safety panel mounted on hinges and fastened with screws, specially designed to prevent tampering. The control panel swivels on two articulated joints so that it can be positioned by the operator for greater ease- of- use and safety.

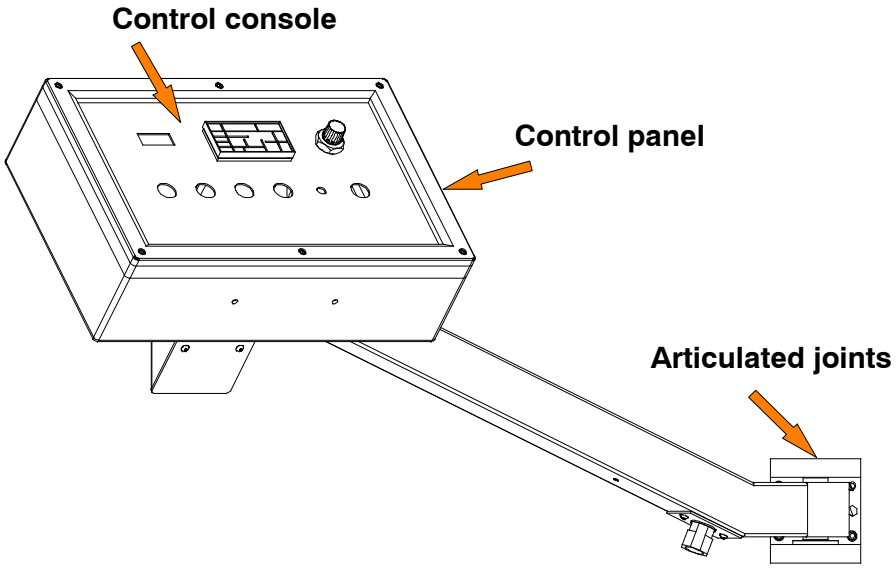

Turntable

Made from a fusion of cast iron it makes up the fulcrum of the cutting band. By releasing the blocking lever on the fixed platform right and left rotation of the bow is consented.

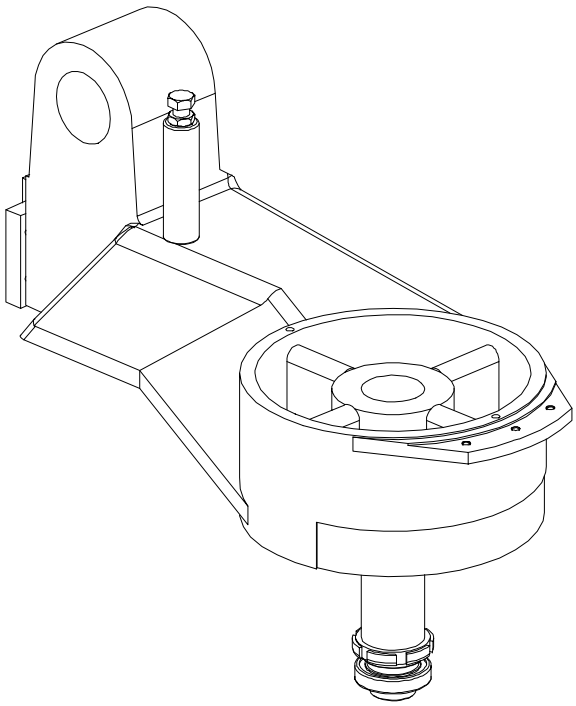

Fixed platform

It is made up of two parts, upper and lower, which close the rotating and platform and support the cutting surface in interchangeable steel.
The lower part is the resting base of the rotating platform, cutting surface and vice. It is free to run transversely on linear guides and slides with re- circulation of pre- loaded spheres. It is integral to the base and the rear part has the reference strokes for 605 left and 605 right cuts.

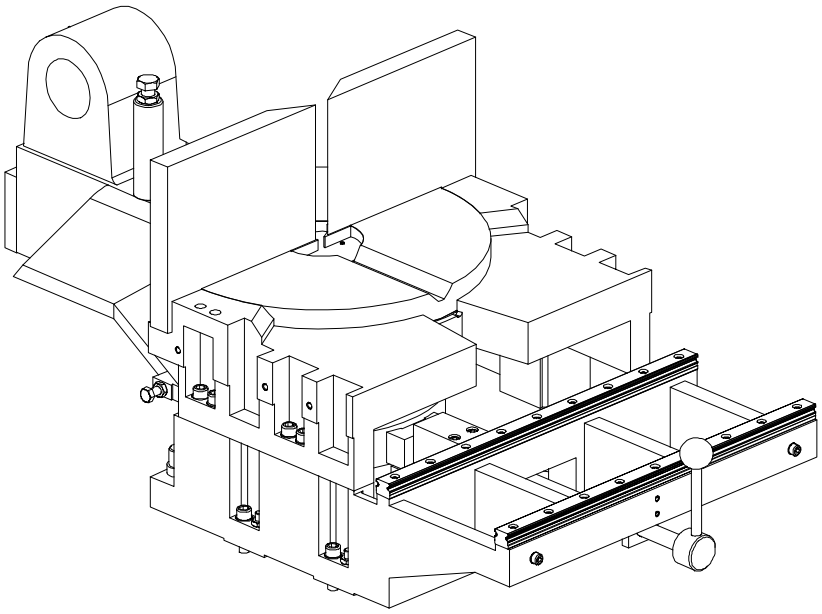

Motion- variator- reducer unit

Rotation of the band is performed by a system made up of a motor connected to a variator and a mechanical speed reducer.
This unit allows rotation of the band in a continuous adjustment range that goes from 20 to 100m/min.

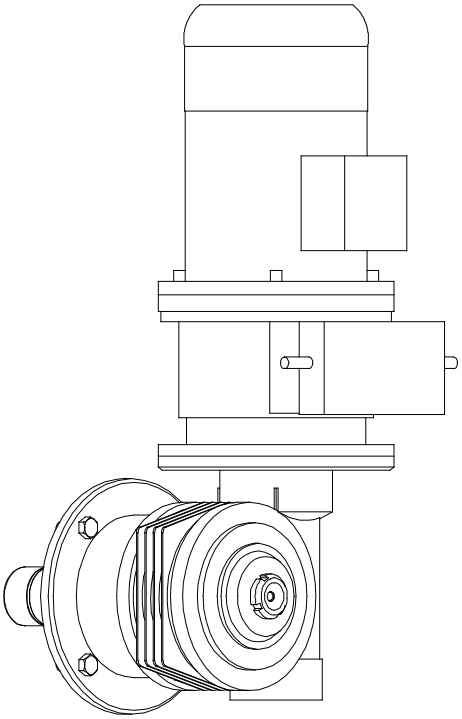

Base

This unit features a large coolant collection surface which conveys the coolant to the rear tank via the tank cover, and a swarf collection drawer. An electric pump is housed inside the tank which draws the clean fluid from the filter system.

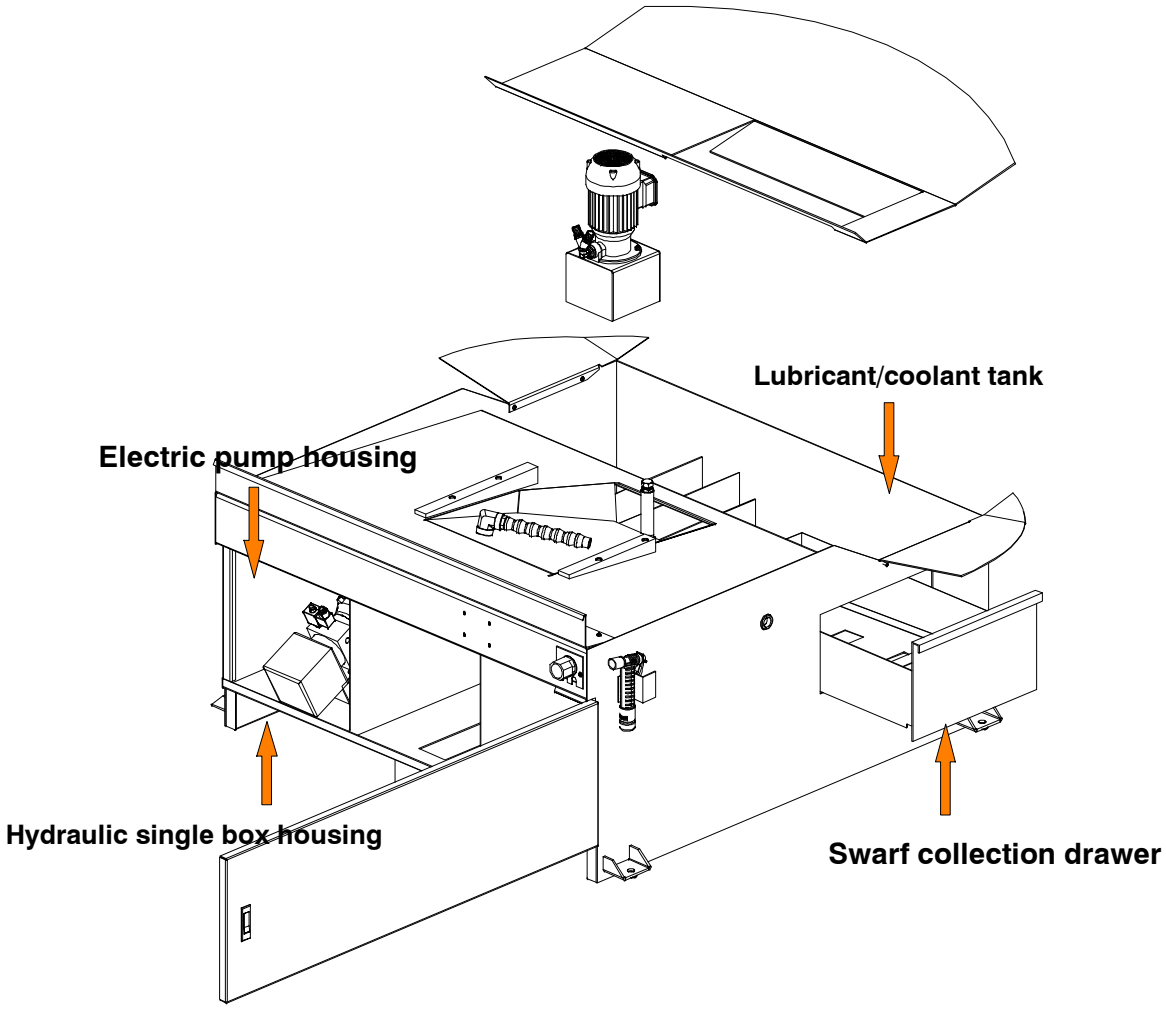

Safety and accident prevention

3

The **DM-1318P** has been designed and produced in accordance with European standards. For the correct use of the machine we recommend that the instructions contained in this chapter are carefully followed.

Use of the machine

The **DM-1318P** band saw cutting machine is intended exclusively for cutting metallic materials, ferrous or non-ferrous, in section or solid.
Other types of material and machining are not compatible with the specific characteristics of the saw.
The employer is responsible for instructing the personnel who, in turn, are obliged to inform the operator of any accident risks, safety devices, noise emission and accident prevention regulations provided for by international standards and national laws regarding the use of the machine. The operator must be perfectly aware of the position and function of all the machine's controls.The instructions, warnings and accident prevention standards in this manual must be respected without question by all those concerned.The following definitions are those provided for by **EEC MACHINES DIRECTIVE 2006/42/CE** :

- "Danger zone": any zone in and/or around a machine in which the presence of a person constitutes a risk for the safety and health of that person.
- "Person exposed": any person finding himself either completely or partly in a danger zone.
- "Operator": the person or persons given the responsibility of installing, operating, adjusting, maintaining, cleaning, repairing or transporting the machine.

Attention

The manufacturer declines any responsibility whatsoever, either civil or criminal, should there be unauthorised interference or replacement of one or more parts or assemblies on the machine, or if accessories, tools and consumable materials are used that are different from those recommended by the manufacturer itself or if the machine is employed in a plant system and its proper function is thereby altered.

General recommendations

LIGHTING

Insufficient lighting for the types of operation envisaged could constitute a safety hazard for the persons concerned. For this reason, the machine user must provide lighting in the working area sufficient to eliminate all shadowy areas while also avoiding any blinding light concentrations. (Reference standard ISO 8995-89 “Lighting in work environments”).

CONNECTIONS

Check that the power supply cables and pneumatic feed systems comply with the maximum machine absorption values listed in the “Machine Specification” tables; replace if necessary.

EARTHING

The installation of the earthing system must comply with the requirements set out in EN STANDARD 60204- 1:2010.

OPERATOR POSITION

The position of the operator controlling machine operations must be as shown in the diagram below.

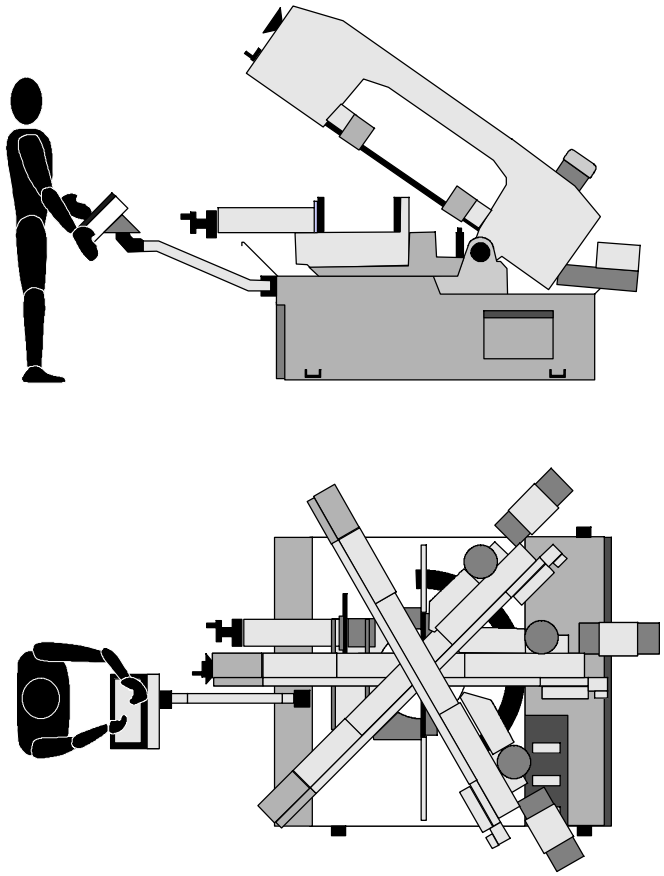

Recommendations to the operator

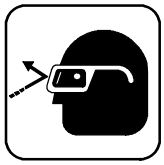

Always wear proper goggles or protective glasses.

Do not use the machine without the guards in position. Replace the polycarbonate windows , if subject to corrosion.

Do not allow hands or arms to encroach on the cutting zone while the machine is in operation.

Do not wear oversize clothing with long sleeves, oversize gloves, bracelets, necklaces or any other object that may become entangled in the machine during working; long hair must be tied back and bunched.

Always disconnect the power supply to the machine before carrying out any maintenance work whatsoever, including in the case of abnormal operation of the machine.

Before starting cutting operations, support the material at both ends of the machine using the support arm - standard, or OPTIONAL accessories such as the feed and discharge roller tables shown in the diagram below. Before removing the devices supporting and moving the material, fasten the latter in place using the machine's clamping devices or other suitable equipment.

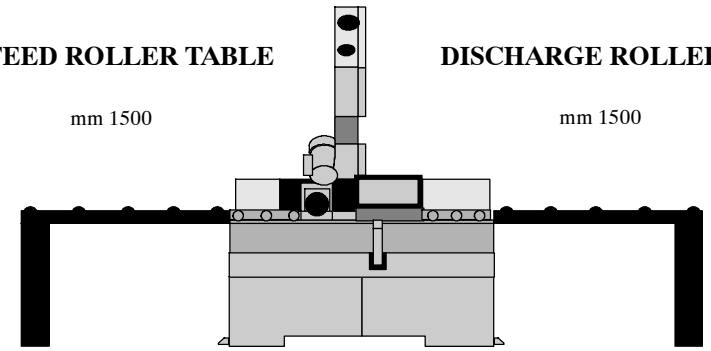

Arrange recovery/collection systems for the cut pieces, such as metal baskets, for example.

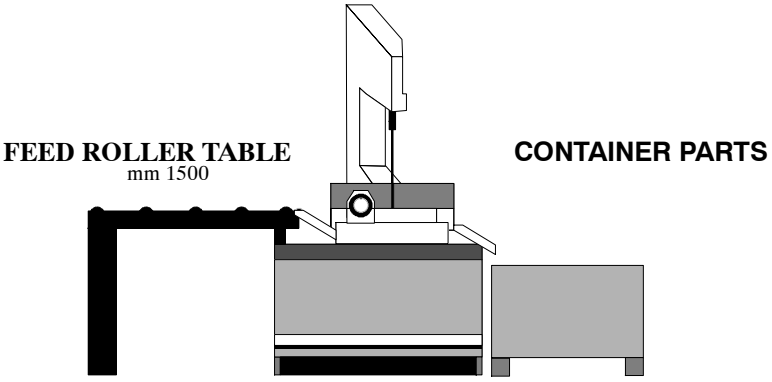

Any maintenance work on the hydraulic or pneumatic systems must be carried out only after the pressure in the system has been released.

The operator must not perform any risky operations or operations not required for the machining operation under way (e.g. remove swarf or metal shavings from the machine while cutting).

Remove equipment, tools or any other objects from the cutting zone; always keep the working area as clean as possible.

Before starting any cutting operations, ensure that the workpiece is securely held in the vice and the machine has been set correctly. A number of examples of how to clamp different profiles correctly in our machines are shown below.

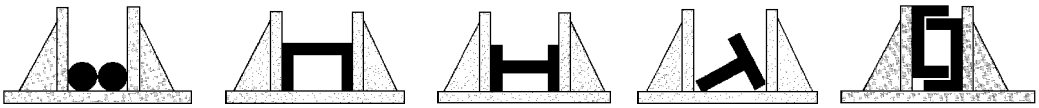

Do not use the machine to cut pieces that exceed the capacity of the machine as listed in the machine specifications.

Never move the machine while it is cutting.

Do not use blades of different sizes to those recommended in the machine specifications.

When cutting very short pieces, make sure that they are not dragged behind the support shoulder, where they could jam in the blade.

When the hydraulic vice is used automatically, check it actually locks the piece, as its stroke is 8 mm only, and that the tightening pressure is correct.

When working on the band saw, wear gloves only when handling materials and for tool changing or adjustment operations. Only perform one operation at a time and do not hold more than one item or operate more than one device simultaneously. Keep hands as clean as possible.

Warning: if the blade jams in the cut, press the emergency stop push-button immediately. If this does not free the blade, slowly loosen the vice, remove the piece and check the blade or blade teeth for breakage. Replace the blade if necessary.

Before carrying out any repair work on the machine, consult the MEP Technical Assistance Service: this can be done through a representative in the country of use of the machine.

Adjustment of the blade-guide head must only be carried out with the machine at a standstill.

Machine safety devices

This use and maintenance manual is not intended as purely a guide for the use of the machine in a strictly productive environment, it is instead an instrument providing information on how to use the machine correctly and safely. The following standards are those specified by the EEC Committee in the directives regarding safety of machinery, health and safety at work, personal protection and safeguarding of the environment. These standards have been applied to the **DM-1318P** band saw.

Reference standards

MACHINE SAFETY

- EEC MACHINES DIRECTIVE 2006/42/CE ;
- EEC directive no. 2004/108/CE “EMC - Electromagnetic Compatibility”;
- EEC Directive No. 2006/95/CE known as “Low voltage directive”.
- EN 13898:2003+A1:2009 Machine tools - Safety - Sawing machines for cold metal

HEALTH AND SAFETY AT WORK

- EEC Directive No. 80/1107; 83/477;86/188;88/188; 88/642 for the protection of workers against risks caused by exposure to physical, chemical and biological agents during working;
- EEC Directive No. 89/391 and Special EEC Directives No. 89/654 and No. 89/655 for improvements in health and safety at work;

- EEC Directive No. 90/394 for the protection of workers against risks deriving from exposure at work to carcinogenic substances;
- EEC Directive No. 77/576 and No. 79/640 on safety signs at work.

PERSONAL PROTECTION

- EEC Directive No. 89/656 and No. 89/686 on the use of personal protection devices.

ENVIRONMENTAL PROTECTION

- EEC Directive No. 75/442 on waste disposal;
- EEC Directive No. 75/439 on the disposal of used oil.
- Directive 2002/95/EC on the restriction of the use of certain hazardous substances in electrical and electronic equipment (RoHS).

Protection against accidental contact with the blade

1. Metal guard screwed to the rear blade guide head (machine side);
2. metal guard screwed to the front blade guide head (operator side);
3. front head sliding support: when the head is at maximum aperture, the support ensures that the blade is covered, leaving free only the part of the blade engaged in the actual cutting, in accordance with Presidential Decree no. 547/55, art. 108;
4. hinged protective cover over blade, fitted with removable closing devices;
5. blade guide plates completely covering the blade teeth;
6. the cutting vice is operated by hydraulic devices, with a max. stroke of 6 mm; the jaws locking the piece must be moved at a distance of 2P3 mm from the piece to be machined.
7. programming and control panel mounted on an articulated, adjustable arm, so that the operator is always at a safe distance from moving components.

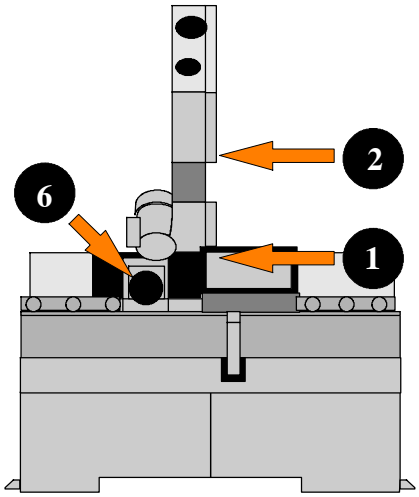

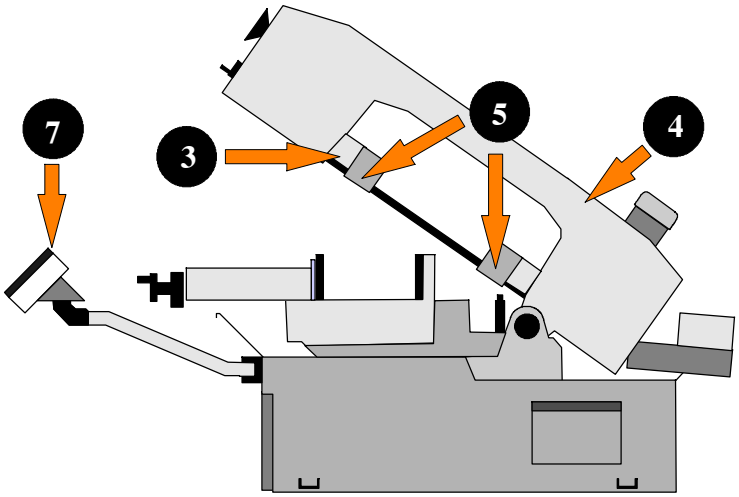

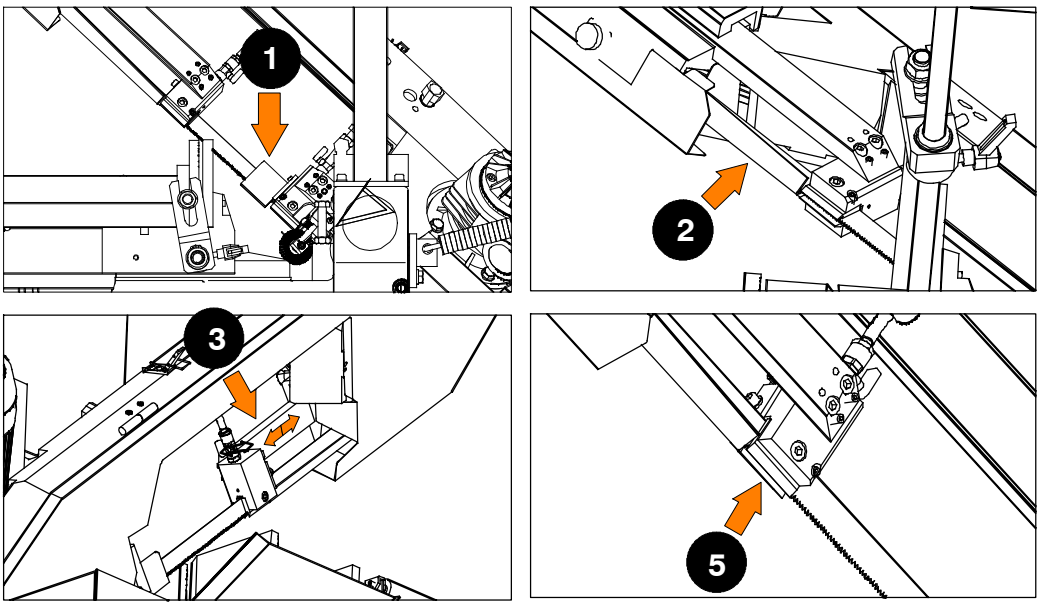

Electrical equipment

In accordance with Italian standard CEI EN 60204- 1:2010, derived from European Standard EN 60204- 1:2010:

- Access to electrical control panel limited by screws and panel- lock device, allowing panel to be opened only after the electricity supply has been turned off;
- 24 Vac Control voltage for actuators, in accordance with chapter 6 or European Standard ”Control and indication circuits”, paragraph 2 ”Control Circuits” sub- section 1 ”Preferential voltage values for control circuits”;
- plant short- circuit protection by means of rapid fuses, earthing of all plant parts connected with work as well as all foreseeable accidental contact; a thermal- magnetic overload cutout switch shuts down the motor;
- protection from accidental start- up by a minimum voltage relay in case of power failure.

Emergency devices

In accordance with Standard EN 60204- 1:2010:

- **Chapter 5 Section 6 Sub- section 1 ”Emergency stop device”**: «the emergency stop device immediately stops all the dangerous and other functions of the machine»;
- **chapter 6 Section 2 Sub- section 4 Point 7 ”Protective guards”:** «the removal of protective guards designed to prevent access to dangerous parts or zones causes the machine to stop immediately; replacing the guards does not restart the functions, which must be reset».

...Emergency devices applicable to the DM- 1318P:

1. **Emergency stop**: a non- return mushroom- head pushbutton, colour red on yellow background, is located on the control panel of the machine. To release the pushbutton, the actuator must be rotated 45 . After the emergency situation has been resolved, the machine must be reset.

2. **Automatic thermal- magnetic cutout switch with thermal- magnetic relay:** The machine's automatic switch, positioned on the left- hand side of the base, has two protective systems against the lack of voltage. In fact, if there is a lack of voltage, it disconnects all electrical devices, blocking the machine immediately and impedes the automatic restore of the voltage. The other function is that of re- arming the circuit breaker relay, positioned to protect from the overloads of current.
3. **Pressure transducer for monitoring the blade tension:** the machine stops immediately if the blade breaks or the tensioner cylinder pressure drops.
4. **Protective guard for blade:** a coded key microswitch is operated if the blade cover is accidentally or intentionally opened during the machine operating cycle, immediately shutting down all functions.

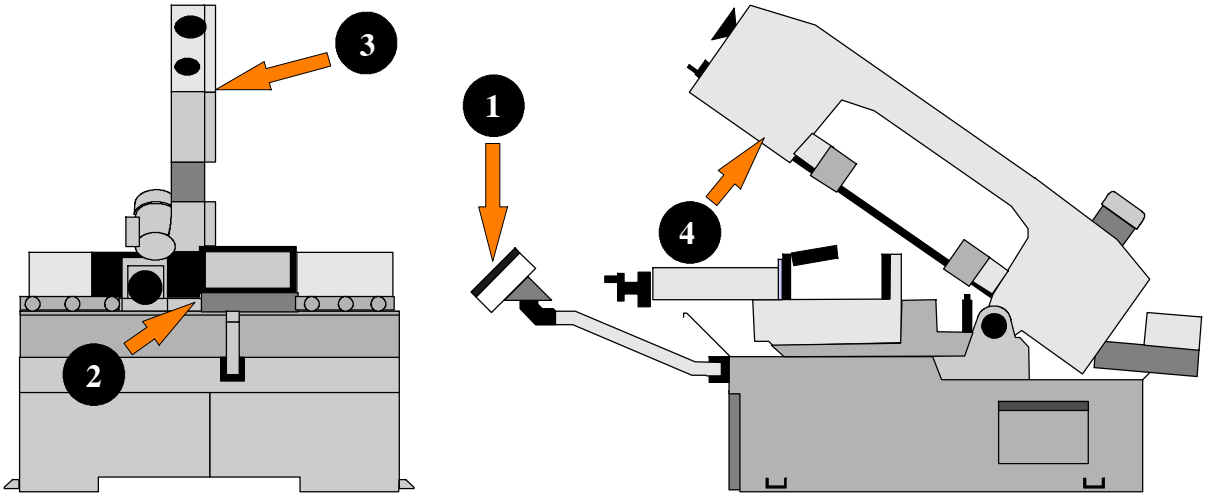

Noise level of the machine

Noise can cause hearing damage and represents one the problems faced by many countries who adopt their own standards. In accordance with the **EEC MACHINES DIRECTIVE 2006/42/CE** , we are listing the standards that specify noise levels for machine tools.
The following paragraph explains the modes and the detected sound power and pressure values released by the sawing machine.
These values comply with norm EN 13898:2003 + A1:2009, EN ISO 12001:2010 and EN ISO 4871:2009,concerning the rules for drawing and presenting a procedure for noise tests and the declaration and check of sound emission values by machines and equipment.

Noise level measurement

Noise levels are measured using an instrument known as an Integrator noise- meter which registers the equivalent continuous acoustic pressure level at the work station.The damage caused by noise depends on three parameters: level, frequency and duration. The equivalent level concept Leq combines the three parameters and supplies just one indication. The Leq is based on the principle of equal energy, and represents the continuous stationary level containing the same amount of energy, expressed in dBA, as that actually fluctuating over the same period of time.This calculation is made automatically by the integrator noise- meter. The measurements are taken every 60 seconds, in order to obtain a stabilised value. The reading stays on the display for a sufficient time to enable a reading to be taken by the operator.Measurements are taken by holding the instrument at approximately 1 metre from the machine at a height of 1.60 metres above the platform at the operator's work station.
Two measurements are taken: the first while the machine operates without cutting anything, the second while cutting in manual mode.

Noise level values

Identification	
Machine type	Band saw for metal applications
Model	**DM- 1318P**
Reference standard	ISO 3746

Results		
Test 1st0	**Description**	C53 steel cut - pipe 356 x 286 mm Bimetal band 4500 x 27 x 0,9
	Results	**Mean sound level (Leq) 71,00 dB (A)** Environmental correction (K) 3,76 dB(A) Peak sound power (Lw) 81,93 dB(A)
Test 2nd	**Descriprion**	C 40 steel cut - HPE 400 x 300 mm Bimetal band 4500 x 27 x 0,9
	Results	**Mean sound level (Leq) 68,92 dB(A)** Environmental correction (K) 3,76 dB(A) Peak sound power (Lw) 81,90 dB(A)
Test 3rd	**Description**	34CND6 material cut - pipe Ø 150 mm Bimetal band 4500 x 27 x 0,9
	Results	**Mean sound level (Leq) 69,07 dB(A)** Environmental correction (K) 3,76 dB(A) Peak sound power (Lw) 79,78 dB(A)

Vibration emission

This sawing machine complies with the norms EN1299 and EN1033, as the machine vibration emission on the devices controlled by the operator does not exceed the threshold of 2.5 m/s^2

Electromagnetic compatibility

As from 1 January 1996 all electrical and electronic appliances bearing the CE marking that are sold on the European market must conform to Directive 2004/108/CE and 2006/95/CE and **EEC MACHINES DIRECTIVE 2006/42/CE** . The prescriptions regard two specific aspects in particular:

1. "EMISSIONS: during its operation, the appliance or system must not emit spurious electromagnetic signals of such magnitude as to contaminate the surrounding electromagnetic environment beyond clearly prescribed limits";
2. "IMMUNITY: the appliance or system must be able to operate correctly even when it is placed in an electromagnetic environment that is contaminated by disturbances of defined magnitude".

The following text contains a list of the applied standards and the results of the electromagnetic compatibility testing of machine model **DM-1318P**; Test report no. 140201.

Product family standards

- CEI EN 55011 (1999) Industrial, scientific, and medical radio frequency appliances (ISM). Characteristics of radio frequency disturbance - Limits and methods of measurement.
- CEI EN 50370-2 (2004): Electromagnetic Compatibility (EMC) - Product family for machine tools - Part 2: Immunity.

Basic standards

- EN 61000-4-2 + A1 + A2 (1996-1999-2001) Electromagnetic Compatibility (EMC) - Part 4: Test and measurement techniques - Section 2: Electrostatic discharge immunity tests - Basic publication.
- EN 61000-4-3 + A1 + A2 (2003 - 1999 - 2001): Electromagnetic Compatibility (EMC) Part 4: Test and measurement techniques - Section 3: Radiated, radio-frequency, electromagnetic field immunity test.
- EN 61000-4-4 + A1 + A2 (1996 - 2001 - 2002) Electromagnetic Compatibility (EMC) - Part 4: Test and measurement techniques - Section 4: Fast transients/bursts immunity tests - Basic publication.
- EN 61000-4-5 + A1 (1995 - 2001): Electromagnetic Compatibility (EMC) - Part 4: Test and measurement techniques - Section 5: Surge immunity test.
- EN 61000-4-6 + A1 (1997 - 2001) Electromagnetic Compatibility (EMC) - Part 4: Test and measurement techniques - Section 6: Immunity to conducted interference, induced by radio frequency fields.
- EN 61000-4-11 + A1 (1995 - 2001): Compatibilità Elettromagnetica (EMC) Part 4: Test and measurement techniques - Section 11: Voltage dips, short interruptions and voltage variations immunity tests.

Emissions

CONDUCTED EMISSIONS				
Gate A	**Freq. (MHz)**	**Q- peak limit (dBuV)**	**Mean value limit (dBuV)**	**Result**
A.C. power supply input	0.15 - 0.5 0.5 - 5 5 - 30	79 - 73 (linear reduction with log of frequency) 73 73	66 - 60 (linear reduction with log of frequency) 60 60	Complies

IRRADIATED EMISSIONS			
Gate	**Freq. (MHz)**	**Q- peak limit (10 m) (dBuV/m)**	**Result**
Enclosure	30 - 230 230 - 1000	40 47	Complies

Immunity

IMMUNITY TO ELECTROSTATIC DISCHARGES			
Gate	**Test levels**	**Evaluation criterion**	**Result**
Enclosure	contact 4 kV steel plate 4 kV in air 8 kV	B	Complies

IMMUNITY TO VOLTAGE (BURSTS)			
Gate	**Test levels**	**Evaluation criterion**	**Result**
A.C. power supply input	2 kV	B	Complies

IMMUNITY TO HIGH VOLTAGE PULSES (Surge)			
Gate	**Test levels**	**Evaluation criterion**	**Result**
A.C. power supply input	1 kV (Phase - phase) 2 kV (Phase - earth)	B	Complies

IMMUNITY TO DIPS AND SHORT VOLTAGE INTERRUPTIONS (PQT)			
Gate	**Test levels**	**Evaluation criterion**	**Result**
A.C. power supply input	70% per 0.5 periods	B	Complies
	0% per 0.5 periods 40% per 5 periods 40% per 50 periods	B	

IMMUNITY TO CONDUCTED ELECTROMAGNETIC FIELDS			
Gate	**Test levels**	**Evaluation criterion**	**Result**
A.C. power supply input	10V	A	Complies

IMMUNITY TO IRRADIATED ELECTROMAGNETIC FIELDS			
Gate	**Test levels**	**Evaluation criterion**	**Result**
Enclosure	10 V/m	A	Complies

Machine installation

4

Packaging and storage

MEP S.p.A. use packing materials that guarantee the integrity and protection of the machine during its transport to the customer.

The type of packing differs according to the size, weight and destination. Therefore the customer will receive the machine in one of two following ways:

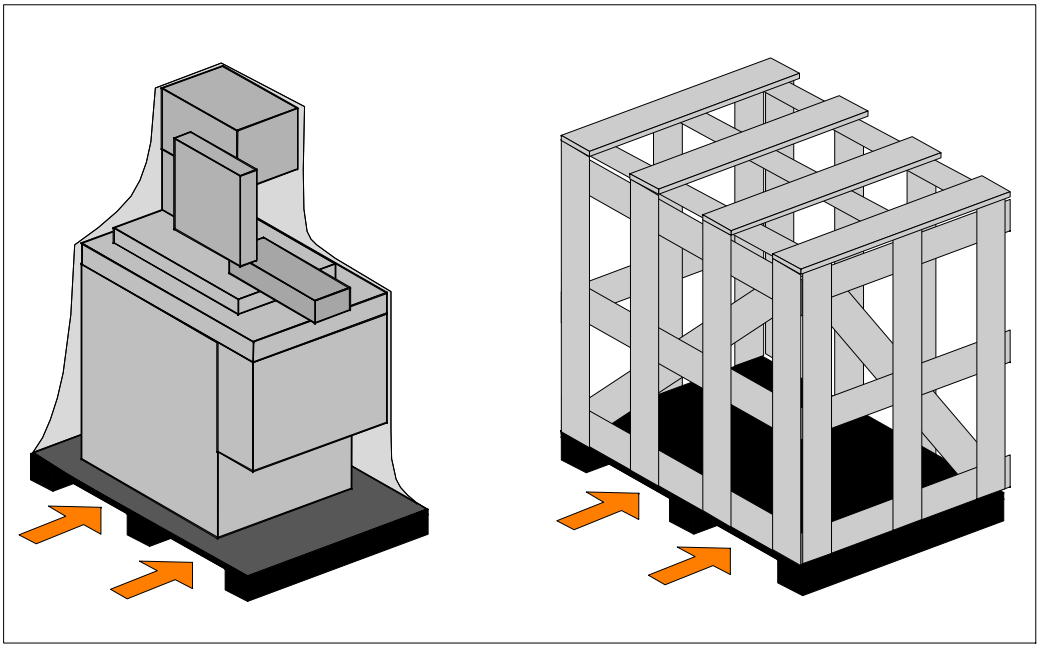

1. on a pallet with straps and heat- shrink plastic;
2. on a pallet with straps, heat- shrink plastic and a wooden crate.

Warning In both cases, for correct balancing the machine must be handled using a fork- lift truck, inserting the tines at the points indicated by the arrows, using the reference marks on the crate itself.

Attention Before carrying out lifting operations, make sure that the weight of the machine, as indicated on the crating or other packaging, is within the forklift truck load limit.

Attention Do not handle the packed machine using slings.

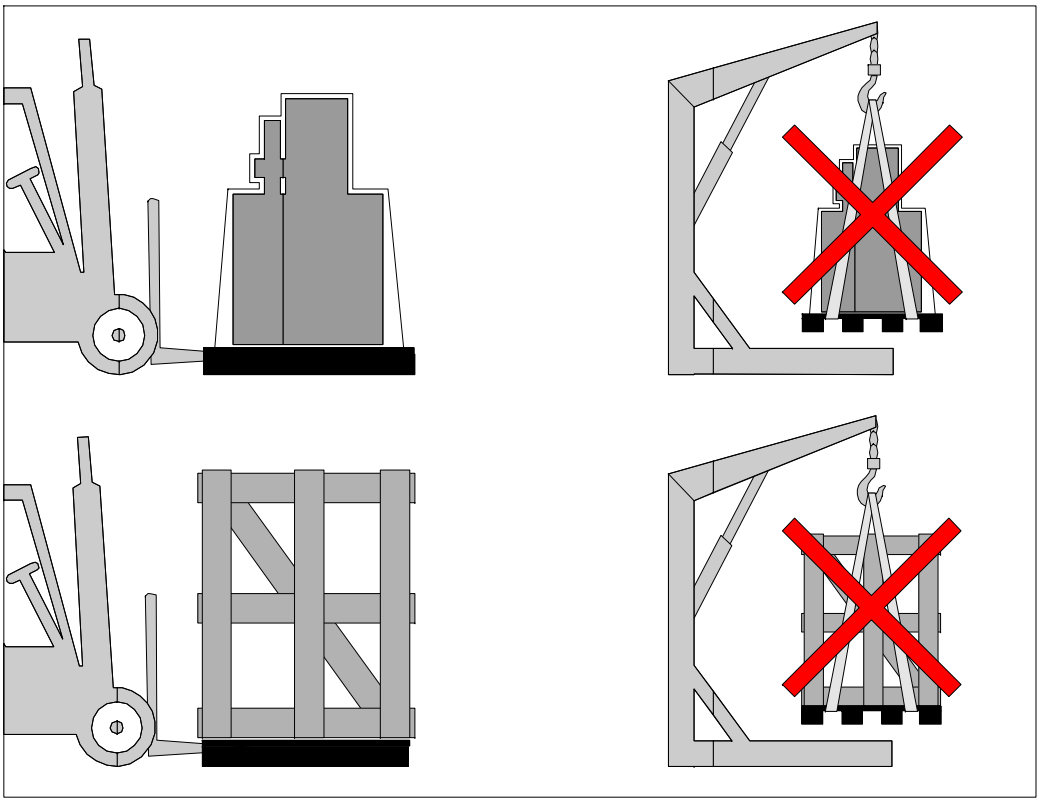

Attention When storing, machines palletized and shrink- wrapped must not be stacked two high, and machines pallettized and crated must not be stacked three high.

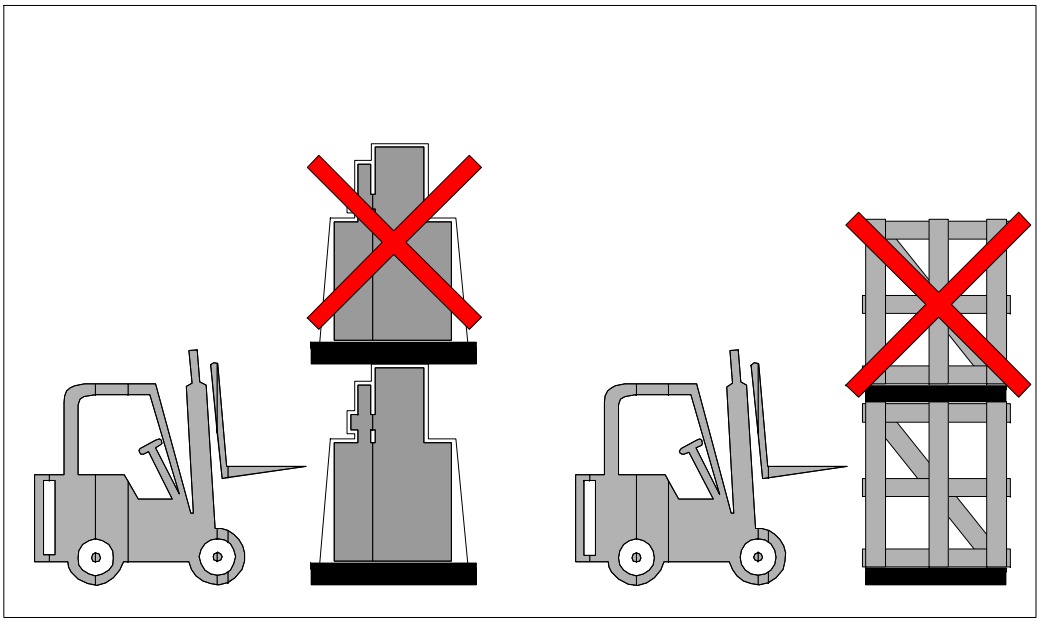

To install the machine, first remove the packing, paying particular attention not to cut any electric wires or hydraulic hoses; if necessary use pliers, a hammer and a cutter.
Open crate in the illustrated order:

1. remove nails and lift the top of the cage;
2. remove nails and lower walls;

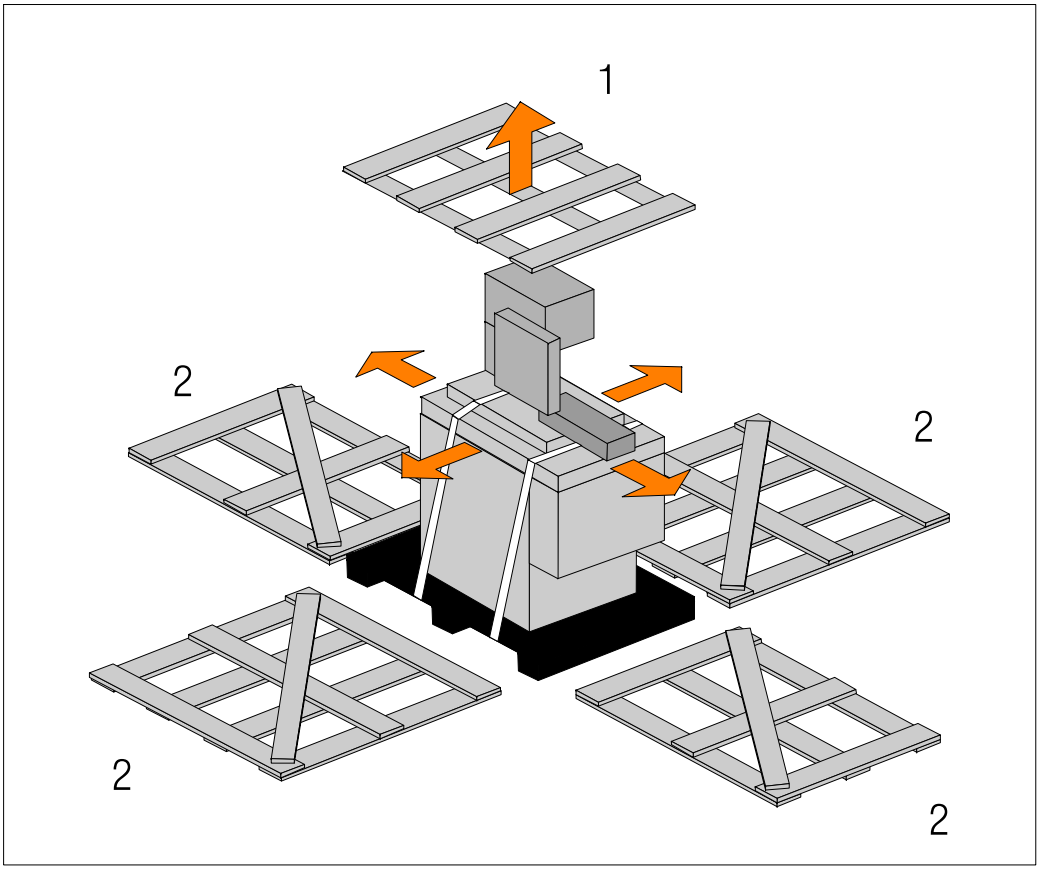

3. remove heat- shrink covering;
4. remove the straps;
5. remove nails from pallet securing planks and remove planks;
6. remove the front panel and insert fork tines.

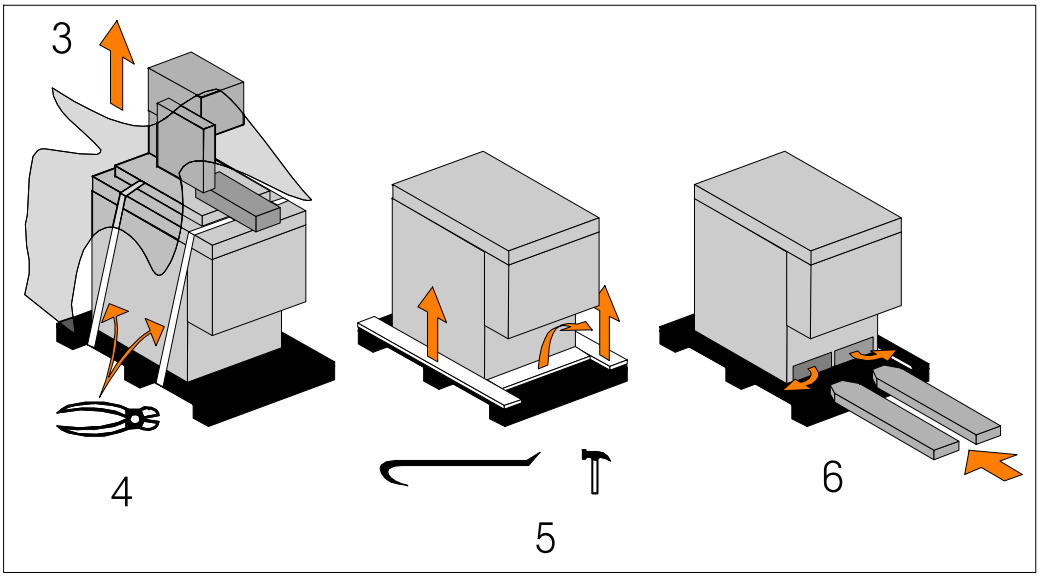

To locate the machine in the workplace, **the machine dimensions** and necessary operator working space, including **the spaces laid** down in safety standards, **must be taken into account.**

Anchoring the machine

The base of the machine is anchored to the floor by two permanent studs located on the sides of the base. The studs are screwed into nuts previously sunk into the concrete, and tightened from above with lock nuts. The schematic specifications set out in Chapter 1 should be taken into account when positioning the machine.

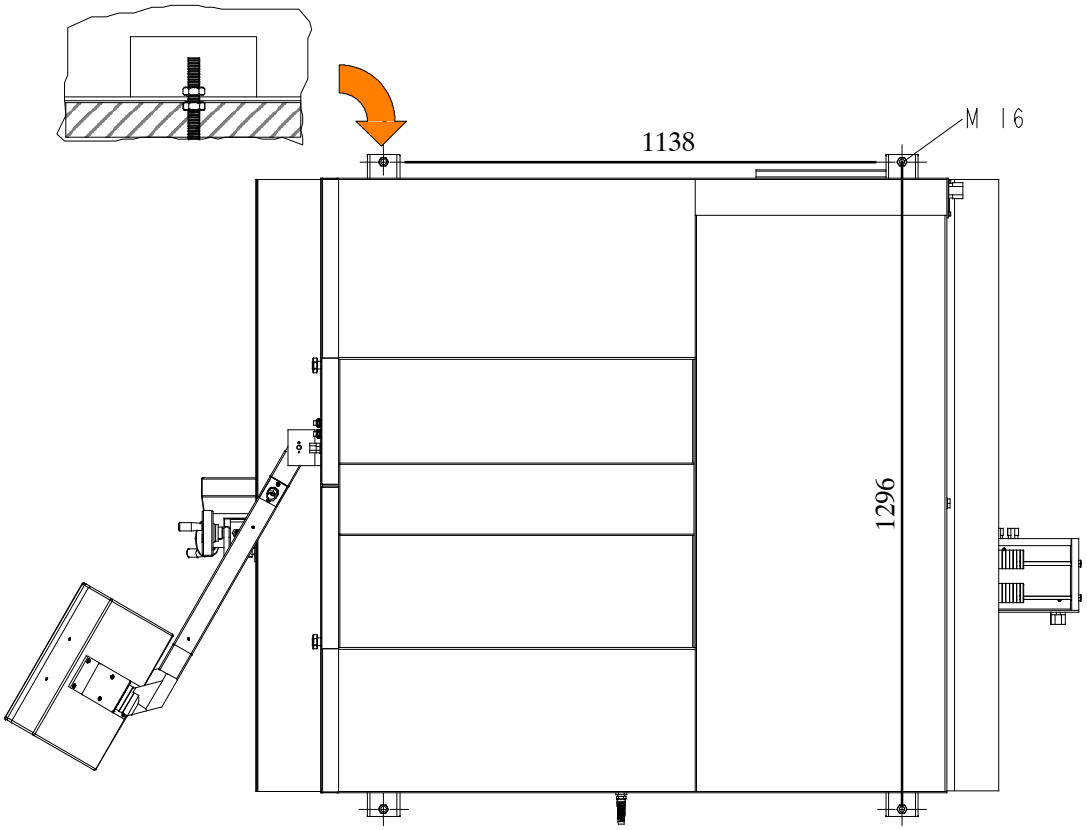

BASE

Minimum requirements

For the machine to function correctly, the room in which it is to be installed must satisfy the following requirements:

- power supply voltage/frequency: refer to the values on the rating plate;
- pneumatic operating pressure: not less than 6 Bar and not more than 8 Bar;
- temperature of machine location: from - 10 to + 50 C;
- relative humidity: not more than 90%
- lighting: not less than 500 Lux.

Warning The machine is already protected against voltage variations, but will only run trouble- free if the variations do not exceed ± 10%.

Check list

Before starting installation, check that all the accessories, whether standard or optional, supplied with the machine are present.

CHARACTERISTICS	STANDARD	OPTIONAL
Base with large swarf collection drawer, removable coolant tank and electropump for band saw lubrication/cooling	✓	
Bar support sliding on straight ball guides, located to the left of the cutting table	✓	
Mechanical variator of blade rotation from 20 to 100m/min	✓	
Small head mobile blade- guide running on the linear guides and slides with re- circulation of pre- loaded spheres	✓	
Blade 4500 x 27 x 0,9 mm	✓	
Recordable stroke to perform cuts of the same size	✓	
Rotating head on a rotating surface with ball bearings and recordable strokes allow the stopping and the blocking in correspondence of the 0°, 45°, 60° right and 45°, 60° left angles	✓	
Electronic transducer of the stretching of the band with display on the console	✓	
Blade cleaning device with rotating brushes with movement transmitted from the pulley engine	✓	
Designed for transpallet handling systems	✓	
Mobile console to operate while maintaining visual control	✓	
Manual vice with screws with rapid nearing and transfer on the linear guides and slides with re- circulation of pre- loaded spheres	✓	
Motor chip discharger unit		✓
Steel blade guide head with adjustable hard metal blocks which open to facilitate blade replacement	✓	
Work table spray gun	✓	
Accessory kit	✓	
Vertical roller table pair		✓
Feed roller table K250 (1500 x N)		✓
Discharge roller table K250 (1500 x N)		✓
Cutting oil 5 lt		✓

***ACCESSORIES AVAILABLE ON REQUEST**

The bag of accessories is enclosed in the machine before being packed and contains:

- hex wrenches 3/4/5/6/10 mm;
- pipe wrench 10 mm;
- 36mm wrench;
- use and Maintenance manual, including order form for parts in relevant user language.

Connection to the power supply

After the machine is levelled and anchored the necessary power hook- up needs to be performed. In order to provide safe operation as well as to prevent

potential damage to the machine, only qualified personnel should make the connections.
Before connecting the machine to the power supply, check that the socket is not connected in series with other machines. This requirement is fundamental for the good operation of the machine.

To connect the machine to the power supply, proceed as follows:

- ▶ Signs of damage that may have occurred during shipping to the electrical cables and the hydraulic hoses
- ▶ The hydraulic oil level is between the upper and lower levels on the gauge.

As supplied, the machine is set to run on three phase voltage as indicated on the serial plate and voltage label.
During the initial hook- up, it is very important to check that the phase order is correct. This is indicated by the hydraulic system pressure gauge registering a pressure rise and the blade running as shown below. If the hydraulics do not register an immediate pressure rise, SHUT THE HYDRAULICS OFF and change the phase order.

Power connection to the machine is made to the L1, L2, L3 and ground terminals located inside the control panel above the fuse holders as shown in the photo.

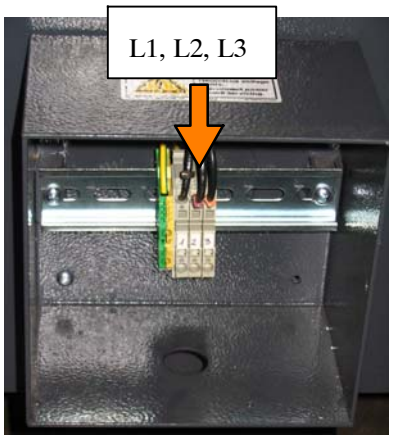

STYLE OF JUNCTION BOX MAY VARY

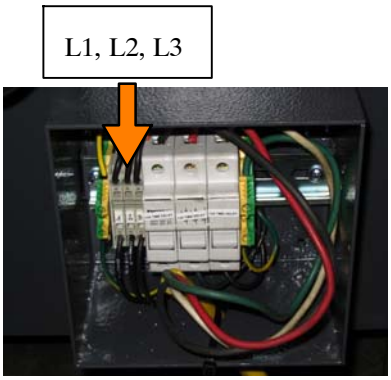

Power junction box with auto- transformer installed in the bandsaw.

Attention **Ensure that the blade moves in the correct direction as shown in the above figure.** If it does not, simply reverse two of the phase wires on the machine power supply input.

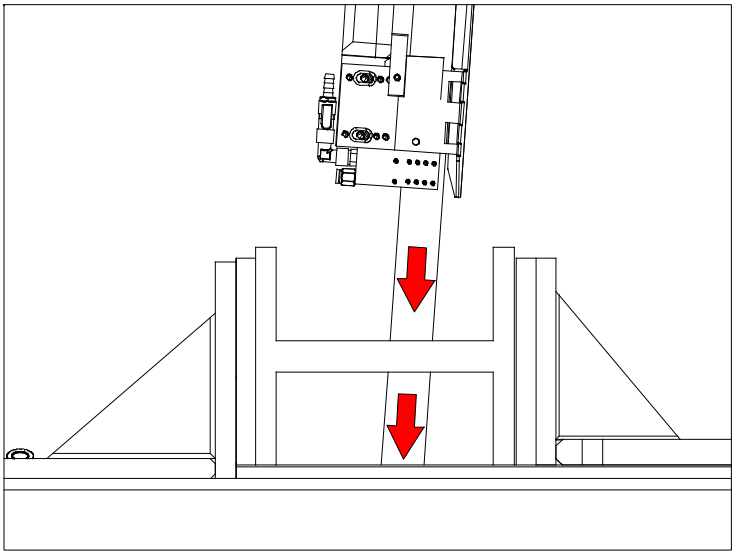

Attention Running the hydraulics “backwards” can damage the hydraulic pump!

Earth grounding procedure

- The customer is to provide and install a ground rod approximately .60 (15mm) diameter, copper clad steel, to be driven no less than 8’ (2.5m) into the ground, no more than 10’ (3m) away from control enclosure
- The ground rod is to be connected to the customer’s in plant ground system. This connection shall be made directly at the ground rod (If applicable).
- It is desirable that the overall resistance to ground measured at the ground rod does not exceed 3 ohms. Customer is advised to consult local power company for further information on grounding.
- The ground rod is to be connected to the ground terminal in the control enclosure using insulated, stranded 8 gauge copper wire
- An additional point to check is to ensure continuity of all ground within the control enclosure. Start with the main power entrance ground terminal where the internal ground conductors should originate and then connect to, the DIN terminal strip, control transformer, and the lid of control enclosure. Also, the PLC and Interface units should have their own ground conductors connected to one of the main ground terminals.
- A properly functioning ground system will:
  - Provide safety for personnel.
  - Ensure correct operation of electrical/electronic apparatus.
  - Prevent damage to electrical/electronic apparatus.
  - Help dissipate lightning strikes.
  - Divert stray radio frequency (RF) energy from electronic/control equipment

The sawing machine is now ready to start the work for which it was designed. Chapter 5 provides a detailed description of the various functions of the machine and its operating cycles.

Description of machine operation

5

This chapter analyses all the machine functions. We begin with a description of the pushbuttons and other components on the control panel.

Control panel description

The figure below shows the control panel of the **DM-1318P**.

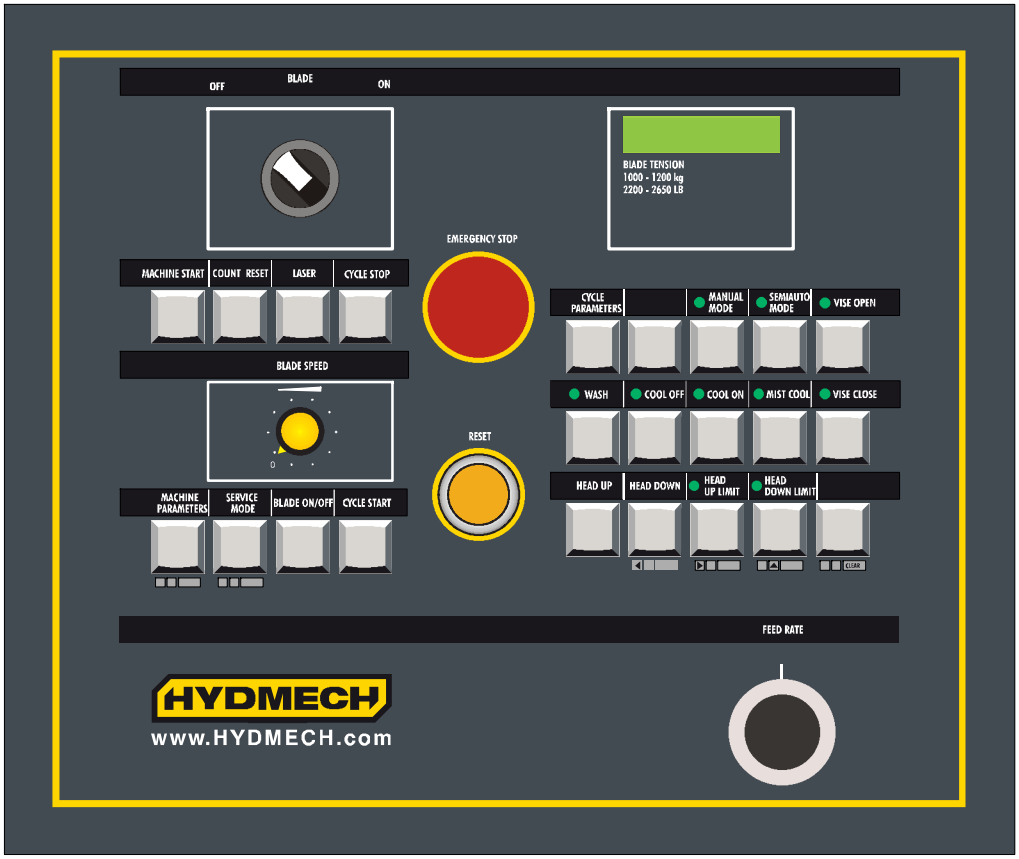

Key of control console keyboard

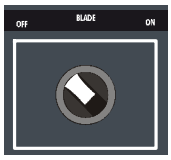

Cutting speed selection: hare (fast), turtle (slow) and zero (deselection)

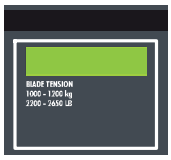

Display for the following messages:
- diagnostic
- alarms (cause description)
- input and outputstatus
- cut counting
- time spent for the cut made
- blade motor absorption
- blade tension
- blade speed
- numeric displaying of the head position.

Initialisation key: enables machine operation

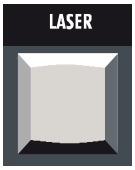

Switch to activate or deactivate the laser to position the bar accurately to carry out non- standard or facing cuts, or to activate

Emergency stop button: when pressed, immediately shuts down the machine. To reset the emergency stop button, simply rotate through 45°

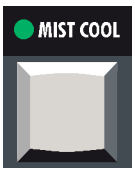

Selection for min. lubrication (optional)

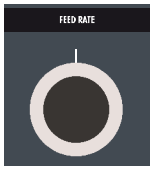

Hydraulic adjuster for choosing the head lowering speed

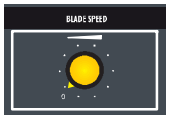

Optional: electronic speed control (inverter). Blade cutting speed potentiometer: 20 to 45 m/min. at low speed and 35 to
90 m/min. at high speed

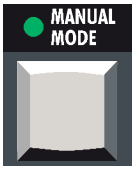

Manual cycle key (optional)

Semi- automatic/Dynamic cycle key (optional)

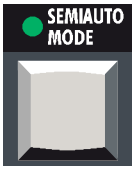

Semi- automatic cycle key

Head “up” key

Zeroing key for cuts made

STOP key: stops the sawing machine during the operating cycle.

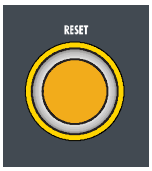

RESET key: resets the machine after an emergency condition or conflicting command

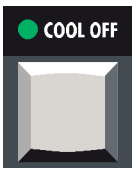

No lubricant/coolant key

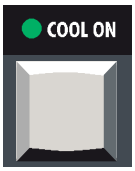

Lubricant/coolant spray cock key (only available during cycle)

Lubricating coolant jet from gun even with stopped machine.

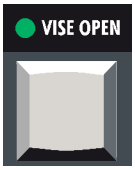

Vice opening/closing

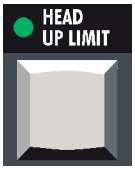

FCTI (Head Upstroke Limit) memory key for Head Positioning System

FCTA (Head Downstroke Limit) memory key for Head Positioning System

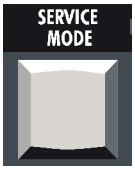

Diagnostics key

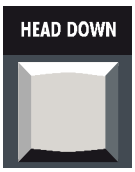

Head “down” key

Programmed cycle start key

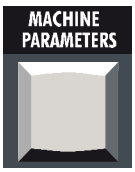

Machine parameters input/edit key

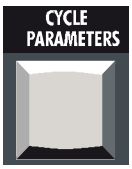

Key for displaying the machine parameters for performing a machining cycle: TL blade tension, PT head position, VL blade speed, T cutting time, PZ cut piece number, I motor absorption

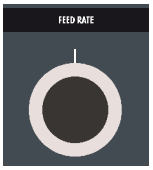

Hydraulic adjuster for choosing the head lowering speed

MOBILE START-EMERGENCY DEVICE (optional)

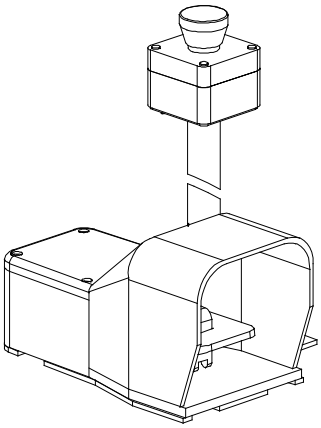

The machine can be equipped with a remote control device, enabling the start of the semiautomatic cycle through pedals and the emergency stop through red mushroom push button (optional).

THERMAL-MAGNETIC CIRCUIT-BREAKER WITH UNDERVOLTAGE COIL AND DOOR LOCKING DEVICE

On the left side of the control board, the machine is equipped with a main switch that, when set ON (1), powers the machine. When set to ON (1), this switch powers up the machine. The main switch is fitted with three power failure protection systems. In fact, in the event of a power failure, this switch disconnects all the electrical devices, causing the machine to immediately shut down, and prevents it from automatically starting up again when power is restored. This device also resets the thermal relay fitted to protect against current overloads.

Basic instructions for carrying out a cutting operation cycle

Manoeuvring the cutting head

The cutting head may be operated by the head “up” and “down” buttons of the Head Positioning System (previously illustrated in the key for the control console keyboard), which are enabled in SEMI-AUTOMATIC mode.

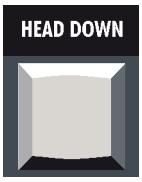

Head “down” key

Head “up” key

N.B. During any processing cycle it is possible to control the machine operating parameters BT (blade tensioning) and HP (head position), pressing the key below it is also possible to display the values BS (blade speed), CT (cutting time), PC (cut piece counting) and IBM (motor current absorption).

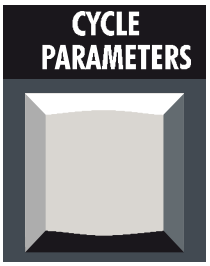

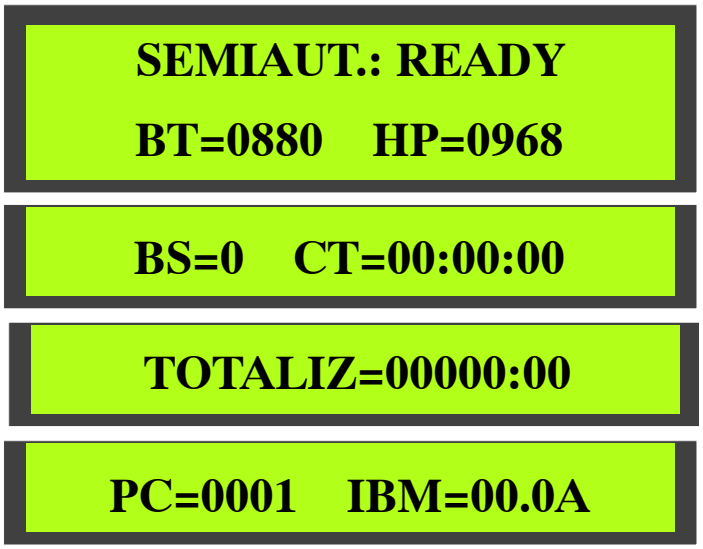

Clamping the work piece in the vice

Vice opening and closure is controlled by the corresponding buttons on the control console. However, to ensure that the workpiece is securely clamped in the vice, proceed as follows:

- ▶ make sure the workpiece dimensions do not exceed the machine’s cutting capacity;
- ▶ make sure the piece is correctly supported on both sides of the machine;
- ▶ move the vice to within 2 3 mm of the workpiece using the handwheel.

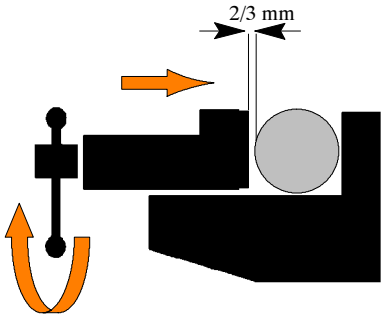

- ▶ Turn the selector for the closure of the vice;

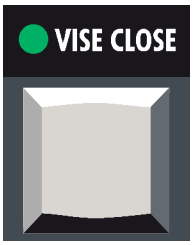

▶ make sure the workpiece is securely clamped in the vice by trying to move it manually.

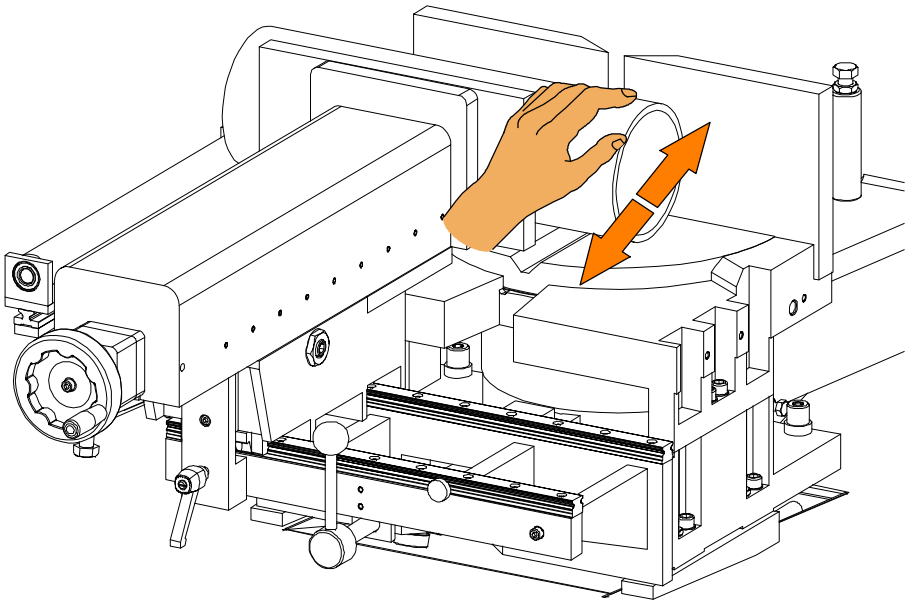

Rapid vice positioning

By means of a simple device the vice can be slid back and forth to accelerate vice opening and closing operations.

▶ Grip the lever illustrated in the figure below and rotate in a clockwise direction: the vice is now free to slide back and forth to the required position. Once positioned, release the lever to lock the vice in place.

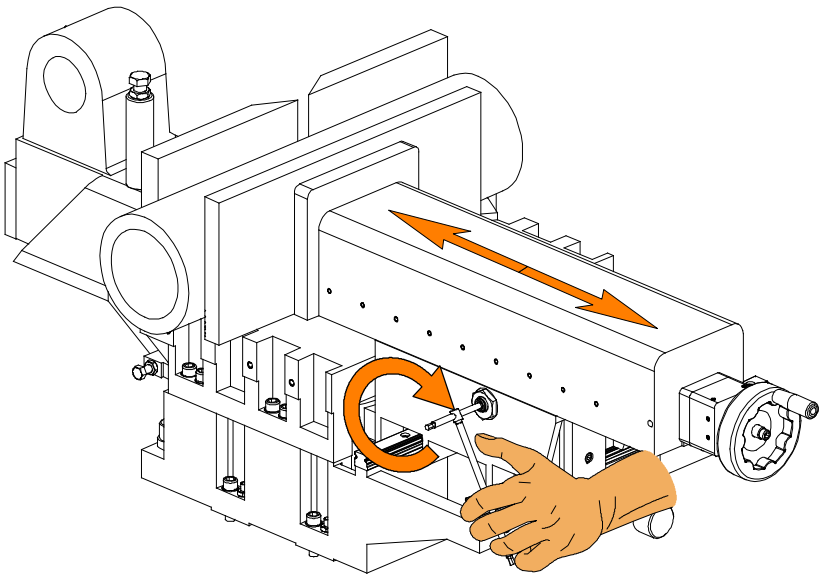

▶ Finally, position the vice to within 2 3 mm of the workpiece using the handwheel.

Rapid vice translation

The vice can be moved to the left or to the right in order to carry out angled cuts, by sliding it along the straight guides.

▶ Release the blocking ball grip indicated in the figure;

▶ Position the vice on the left or on the right and tighten the blocking ball grip;

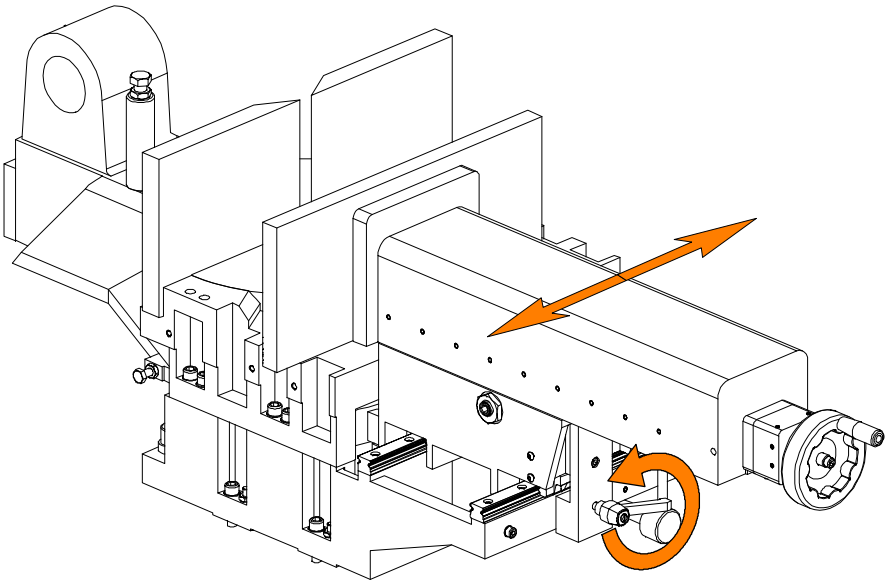

Width of cut

The machine is fitted with protections which protect the entire blade stroke, leaving exposed only the part of the blade required to make the cut itself as specified by current standards. The width of the cut is determined by the longitudinal section of the workpiece, so that only the part of the blade required to make the cut is actually exposed.

- ▶ Position the workpiece on the work table in proximity to the blade downstroke trajectory and clamp it in the vice;
- ▶ release the lever to allow the blade guide small head rod to run inside the bow;

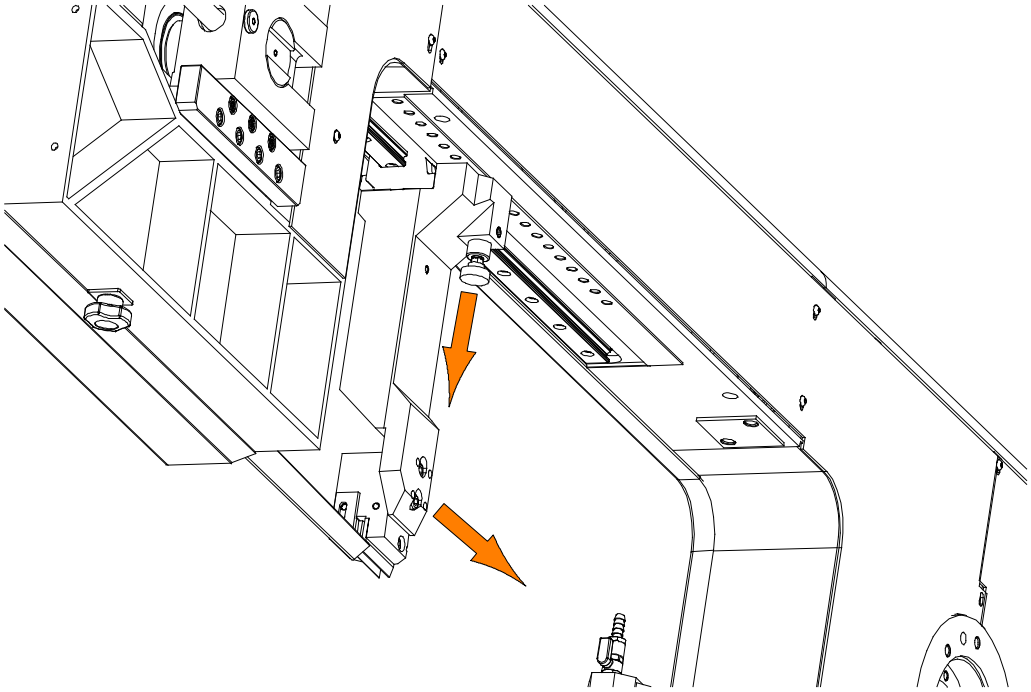

- ▶ position the mobile front guide head near the workpiece so that the downstroke trajectory exceeds the mobile vice jaw;

Preliminary check list for cutting operation

To guarantee complete safety during cutting cycles, the operator should work through a check list of the entire apparatus, checking:

- blade tension;
- that the blade guide head bracket is locked in the correct position;
- that the cutting angle is correct and the cutting head is locked;
- that the work piece is properly clamped in place;
- that the blade teeth are correct for the job to be begun;
- that the speed selected is right for the kind of piece to be cut;
- that all protections are in place and correctly locked;
- the level of lubricant/coolant and that the electropump is activated;
- That the blade descent speed is correct.

Semi- automatic operating cycle

Semi- automatic cutting sequence:

- power up the machine by turning the main switch;
- position the workpiece in the vice.

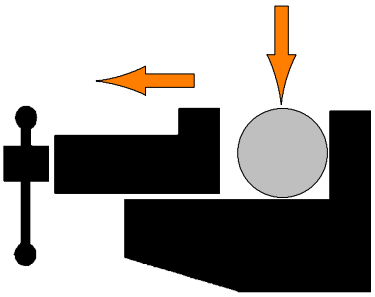

Warning During this programming phase of the cycle, do not position the workpiece perpendicular to the blade so that the head may be moved up and down without colliding with the workpiece.

- Select semi- automatic mode by pressing the corresponding button on the control console.

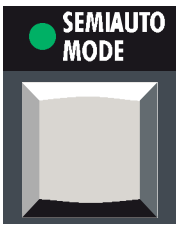

▶ Select the required cutting speed in accordance with the type of material being cut (tortoise = low speed; hare = high speed).

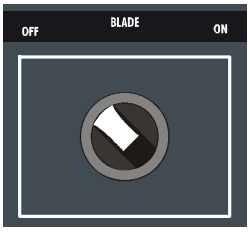

N.B. If the machine is equipped with the optional inverter, set the speed for the type of material being cut using the potentiometer on the control console.

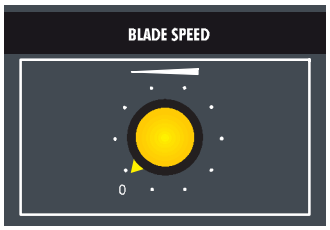

▶ Program the lubricant/coolant spray using the corresponding button on the control console and adjust the delivery rate using the cocks on the blade guide heads. It is also possible to set the lubricant/coolant delivery mode.

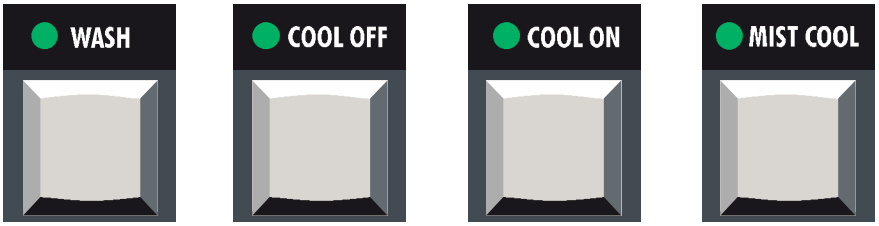

▶ Position the cutting head about 10 mm from the workpiece using the up (Y+) and down (Y-) arrow keys.

▶ Press the FCTI (Head Upstroke Limit) memory button to save the head start position at the beginning of the cycle.

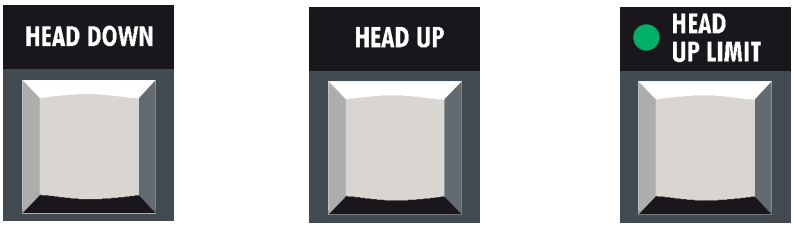

▶ Lower the head to the end-of-cut position by pressing the down (Y-) arrow key.

▶ Press the FCTA (Head Downstroke Limit) memory key to determine the final position of the head at the end of the cut. As soon as you have pressed the FCTA memory key the vice will close and the head will return up to the FCTI position ready for cycle start.

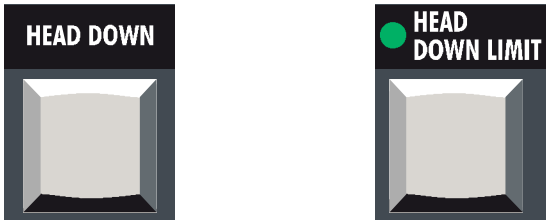

▶ Fully close the head lowering adjuster, on the right side of the control console.

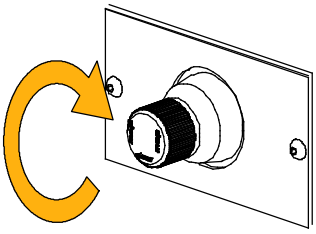

▶ Correctly position the workpiece in the vice and calculate the length of cuts (using the cut- to- size rod).

▶ Open the vice using the relative button and manually move the vice towards the material, leaving a minimum distance of 2 3 mm. (as illustrated in the Manual cycle).

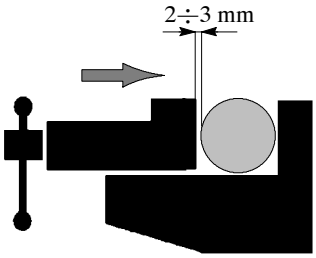

▶ Start the cutting cycle pressing the start key or the pedal control (optional).

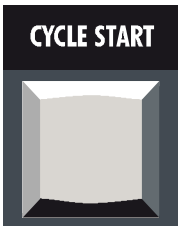

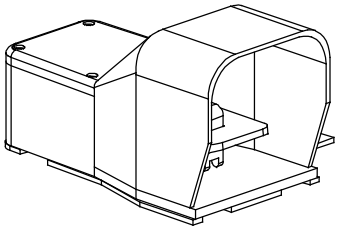

▶ After you have given the START command, the blade starts to rotate, the vice clamps the workpiece and the coolant spray is activated. The cutting head will remain in the start position until the head descent regulator located on the front right of the base is opened.

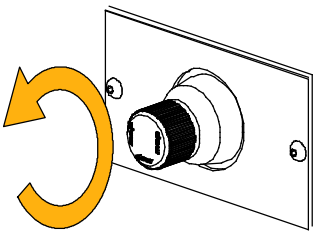

Warning Adjust the head downstroke speed in accordance with the type of material being cut, the blade rotation speed and the quality of finish required.

▶ Once the piece has been cut (FCTA position), the blade stops rotating, the cutting head returns to the FCTI position and the vice opens. The machine is now ready to start a new cycle.

Execution of inclined cuts

It is possible to perform inclined cuts with angles from 60° left and 60° right. The rotating platform has pre-set reference strokes for the fast execution of cuts at 0°, 45°, 60° right, and 45°, 60° left.

In any case it must be pointed out that the bar support rollerway, located on the loading side of the machine (to the left of the cutting table) has two pre-set positions, one for straight cuts or cuts with an inclination of up to 30° (left or right), the other for cuts with an inclination of 60° right.

Loading side rollerway position

For 0° or 30° left/right cuts check that the rollerway is positioned as shown in the drawing below:

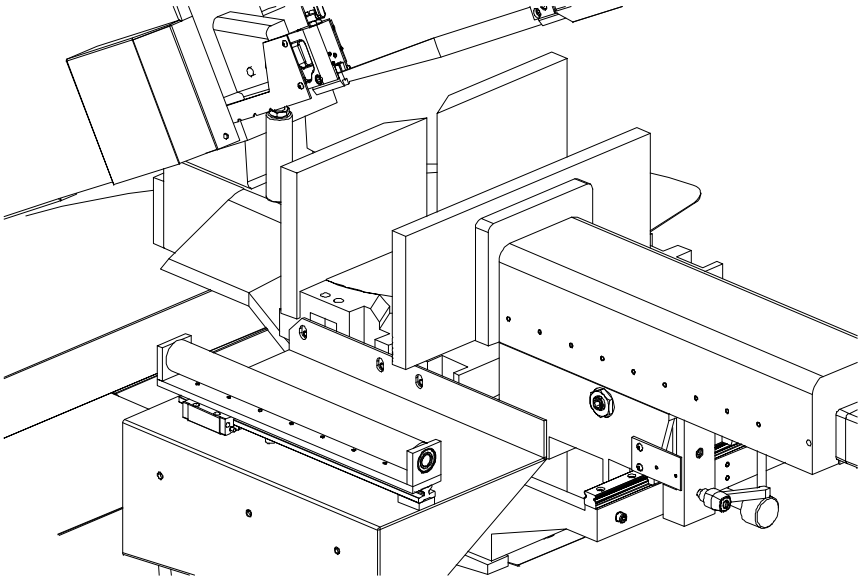

For 30° to 60° right cuts check that the rollerway is positioned as shown in the drawing below:

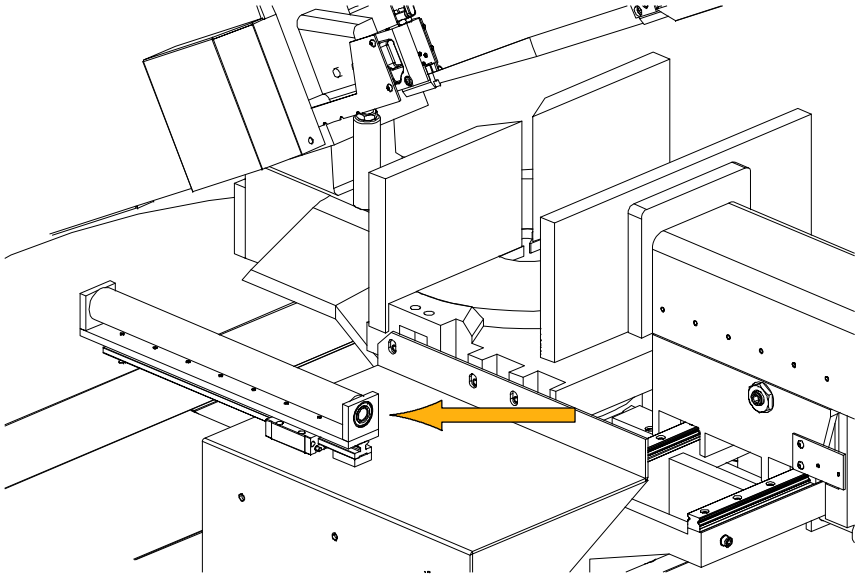

Angled cuts 45° to the left

▶ Make sure the vice is positioned to the left of the 0° cutting slot;

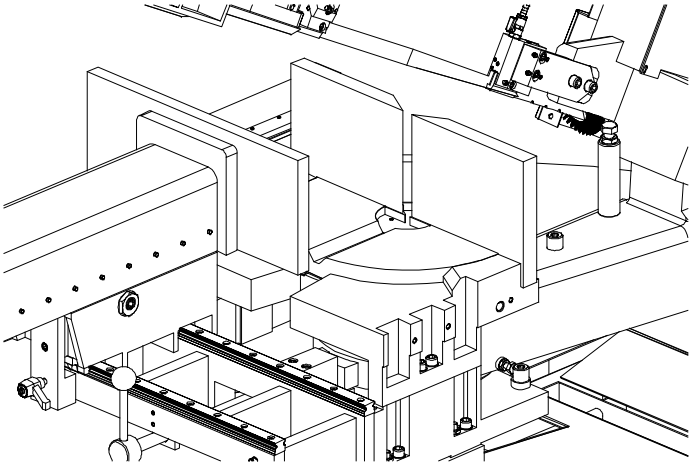

▶ slacken the turntable lock/release lever.

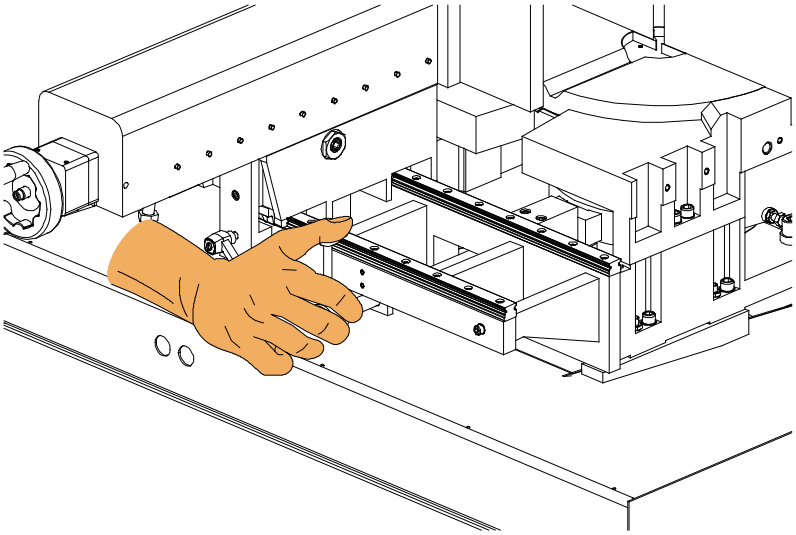

Warning

The 0, 45 and reference stops for cuts to the right and the 45° reference stop for cuts to the left facilitate rapid head positioning during turntable rotation. However, the eccentric pin is only correctly positioned if the initial rotation of the turntable when released is corrected.

▶ Swing the head from left to right until it is positioned at the required angle, as indicated by the graduated scale on the turntable.

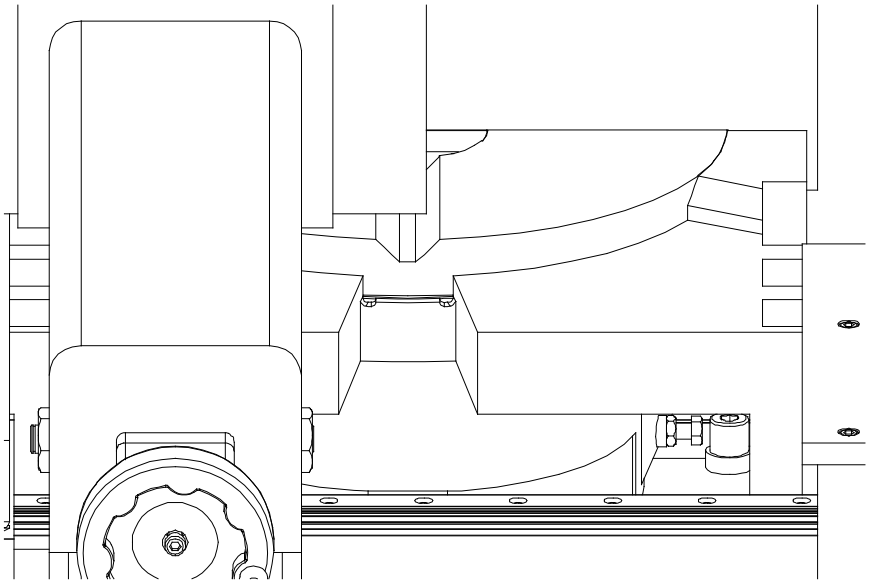

Attention Always rotate the head when it is in the upper position to avoid blade collision with the moving jaw on the clamp.

▶ Relock the turntable lock/release lever.

▶ Perform the cut keeping in mind the preliminary safety instructions noted in this chapter.

Angled cuts 60° to the left

▶ Ensure that the vice is positioned on the left of the cutting slit at 05, see the previous paragraph;

▶ Release the the block/unblock head rotating surface lever.

▶ remove the pre- set stroke to 45° left;

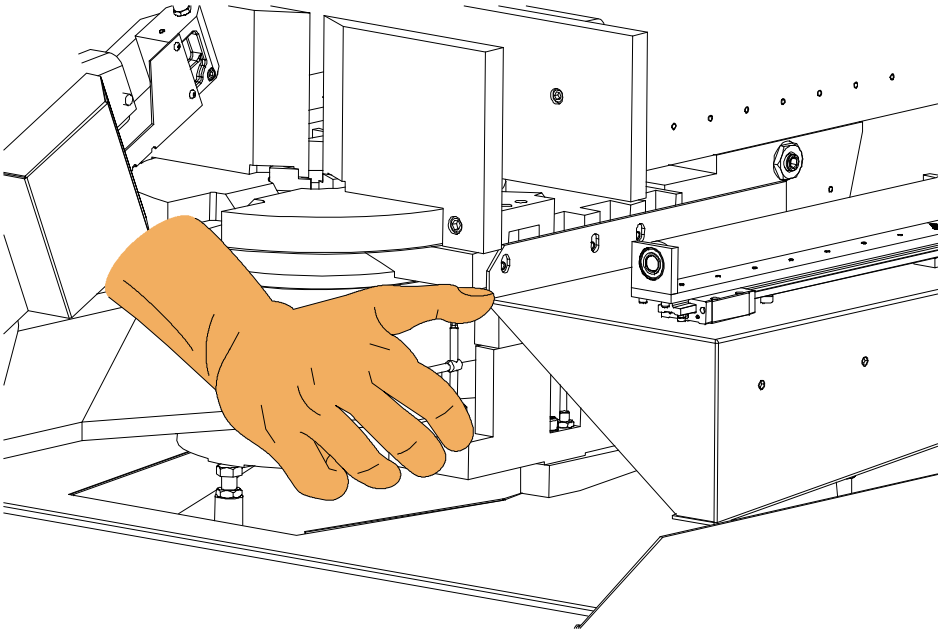

▶ Turn the head from left to right until the desired inclination is obtained. This is displayed on the graduation noted on the rotating surface.

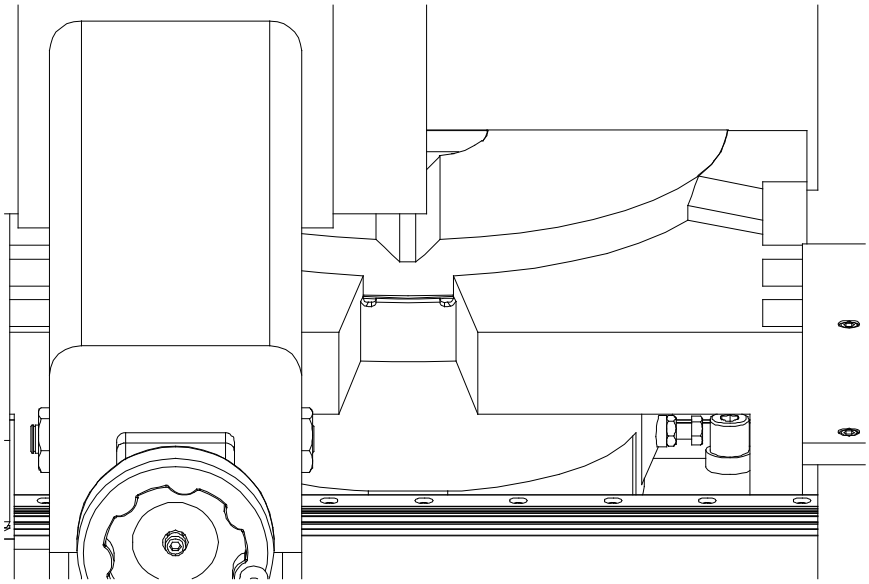

Attention Always rotate the head when it is in the upper position to avoid blade collision with the moving jaw on the clamp.

▶ Tighten the block/unblock rotating surface lever;

▶ Perform the cut keeping in mind the preliminary safety instructions noted in this chapter.

Angled cuts 45° to the right

Carry out the same operations described in the previous paragraph, remembering that before you start machining you must first:

▶ move the vice to the right of the cutting slot;

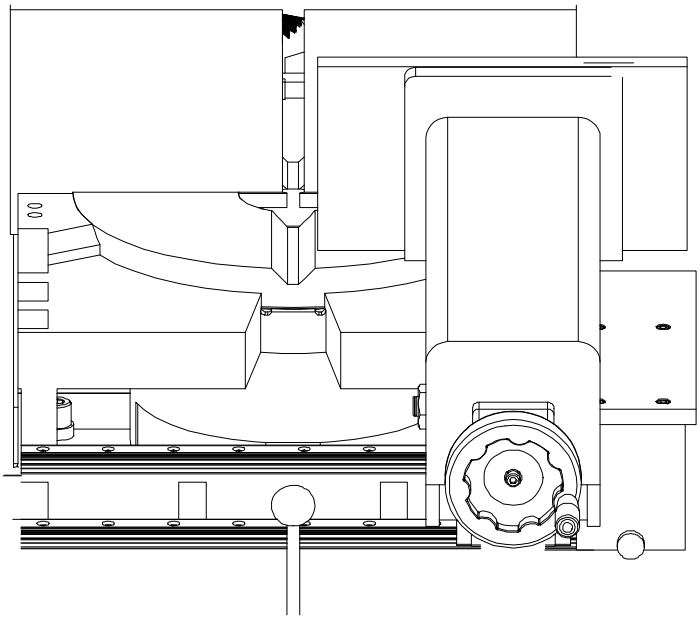

Attention

When positioning the vice to the left or right, make sure the moving jaw is beyond the 0° cutting slot to avoid any risk of collision with the blade downstroke.

▶ slacken the turntable lock/release lever;

▶ remove the 0° stop;

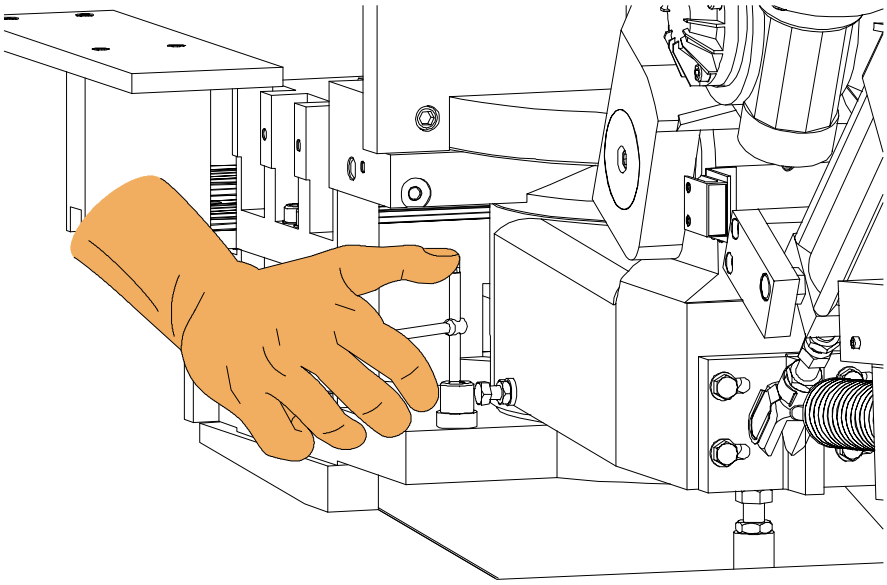

▶ swing the head from left to right until it is positioned at the required angle, as indicated by the graduated scale on the turntable;

▶ relock the turntable lock/release lever;

▶ Perform the cut keeping in mind the preliminary safety instructions noted in this chapter.

Angled cuts 60° to the right

▶ Move the vice to the right of the cutting slit;

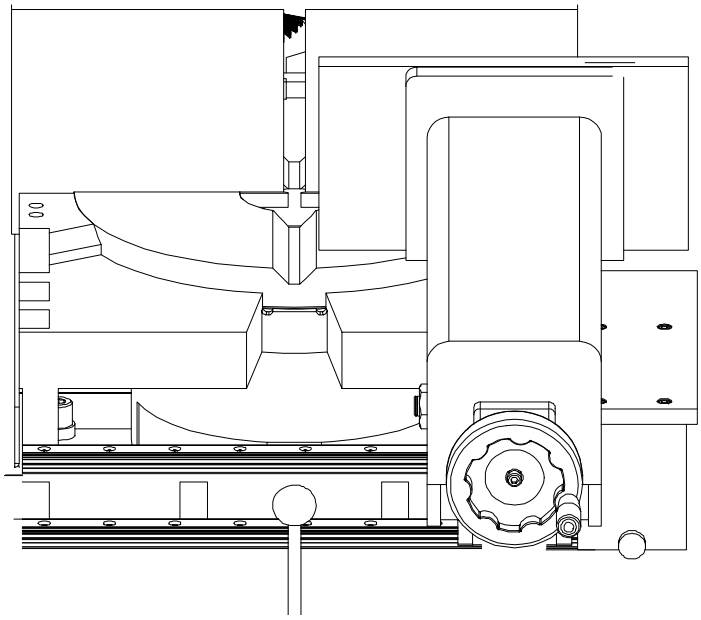

▶ Remove the pre-set stroke to 45° right

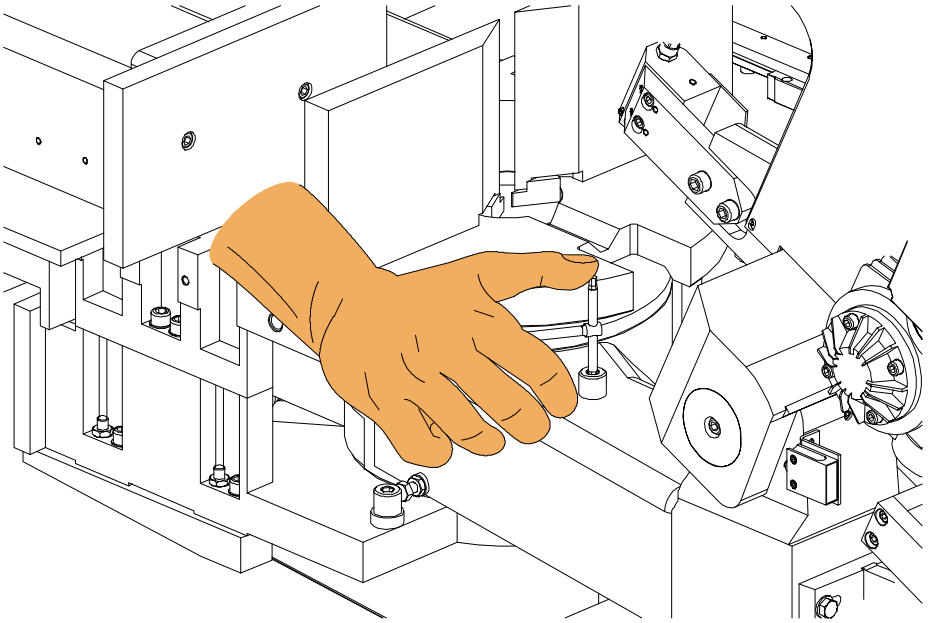

Attention

When positioning the vice on the left or on the right, pay attention that the mobile jaw does not exceed the cutting slit at 05. In this way it will not interfere with the band during descent.

- Slacken the turntable lock/release lever;

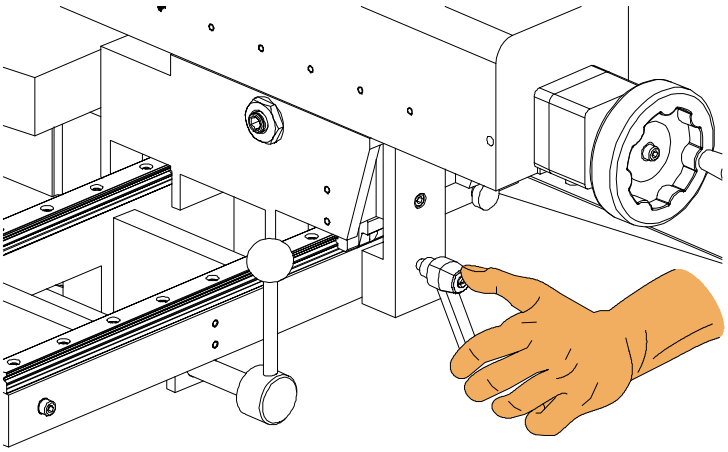

- swing the head from left to right until it is positioned at the required angle, as indicated by the graduated scale on the turntable;
- relock the turntable lock/release lever;
- Perform the cut keeping in mind the preliminary safety instructions noted in this chapter.

Diagrams, exploded views and replacement parts

6

This chapter contains functional diagrams and exploded views of the **DM-1318P**. This document is intended to help in identifying the location of the various components making up the machine, giving information useful in carrying out repair and maintenance operations; This chapter will also enable the user to order replacement parts with no risk of misunderstanding, as all parts are given codes.

Hydraulic diagram

Sim.\Sym.	File	Descrizione\Description
	POMPAID	Pompa idraulica *Hydraulic pump*
	BLK106	Raccordo idraulico *Pipe fitting*
	FFLH53	Valvola riduttrice *Reducing valve*
	FFLH97	Elettovalvola direz. 4/3 elettroidr. *Double-acting solenoid valve 4/3*
	FFLP42	Manometro *Gauge*
	FFLP53	Motore elettrico *Electric motor*
	FFLP62B	Valvola di blocco *Check valve*
	FFLP75A	Cilindro a doppio effetto *Double-acting cylinder*
	FILTROID	Filtro aspirazione *Suction filter*
	NIPPLO-FOR	Raccordo idraulico a flusso ridotto *Reduced flow pipe fitting*
	GIU_PGM	Giunto meccanico asse pompa *Pump axis coupling*

Sim.\Sym.	File	Descrizione\Description
	REG_FLU	Regolatore di flusso con by-pass elettrico *Flow regulator with electric by-pass*

Sim.\Sym.	File	Descrizione\Description

REV.	MODIFICA	DATA	FIRME
R0.3	Mod.lunghezza tubi idraulici + modifica manifold (-MF2)	18/06/2014	Salfanelli
R0.2	Mod. descrizioni distinta IT-EN	22/03/2010	Bartoli

Dis. N. **DM**
CAD SPAC
File DM1318P-240\2.DWG
Data 10-09-2009

Impianto *DM 13" 18" P*
Denominazione LISTA SIMBOLI
Simbol key

Ordine
Commessa
Esecutore Bartoli

FOGLIO 100
ULTIMO 106

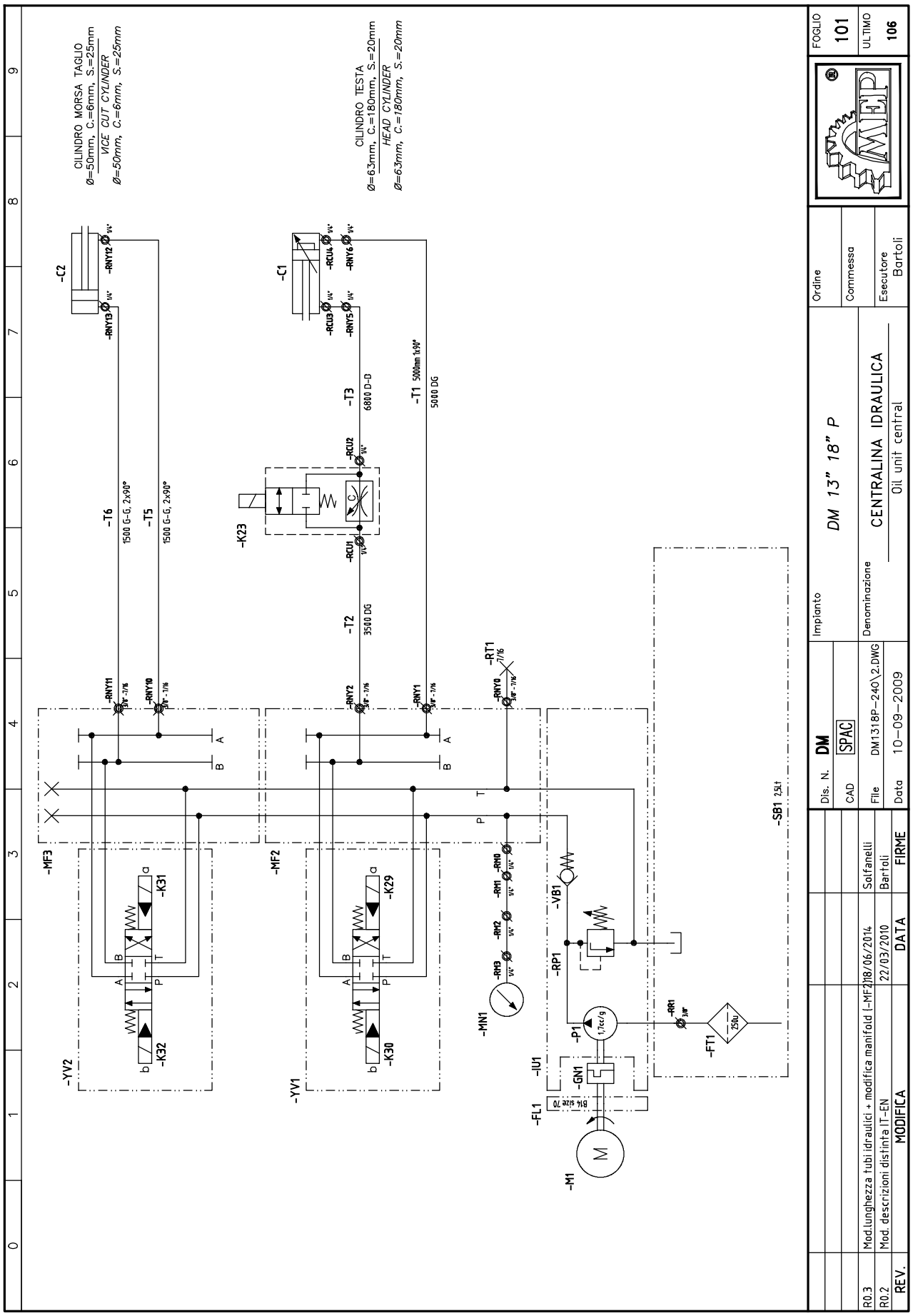
CILINDRO MORSA TAGLIO
Ø=50mm, C.=6mm, S.=25mm
VICE CUT CYLINDER
Ø=50mm, C.=6mm, S.=25mm
CILINDRO TESTA
Ø=63mm, C.=180mm, S.=20mm
HEAD CYLINDER
Ø=63mm, C.=180mm, S.=20mm
-C2
-C1
-RNY12
-RNY13
-RCU4
-RNY6
-RCU3
-RNY5
-T6
-T5
-T3
-T1
-T2
-RCU2
-RCU1
-K23
-RNY11
-RNY10
-RNY2
-RNY1
-RNY3
-RT1
-MF3
-MF2
-YV2
-YV1
-K31
-K32
-K29
-K30
-RH3
-RH2
-RH1
-RH0
-MN1
-VB1
-RP1
-P1
-GN1
-IU1
-FL1
-M1
-RR1
-FT1
-SB1
FOGLIO
101
ULTIMO
106
Ordine
Commessa
Esecutore
Bartoli
Impianto
DM 13" 18" P
Denominazione
CENTRALINA IDRAULICA
Oil unit central
Dis. N.
DM
CAD
SPAC
File
DM1318P-2401.2.DWG
Data
10-09-2009
R0.3
Mod.lunghezza tubi idraulici + modifica manifold (-MF2)
18/06/2014
Solfanelli
R0.2
Mod. descrizioni distinta IT-EN
22/03/2010
Bartoli
REV.
MODIFICA
DATA
FIRME

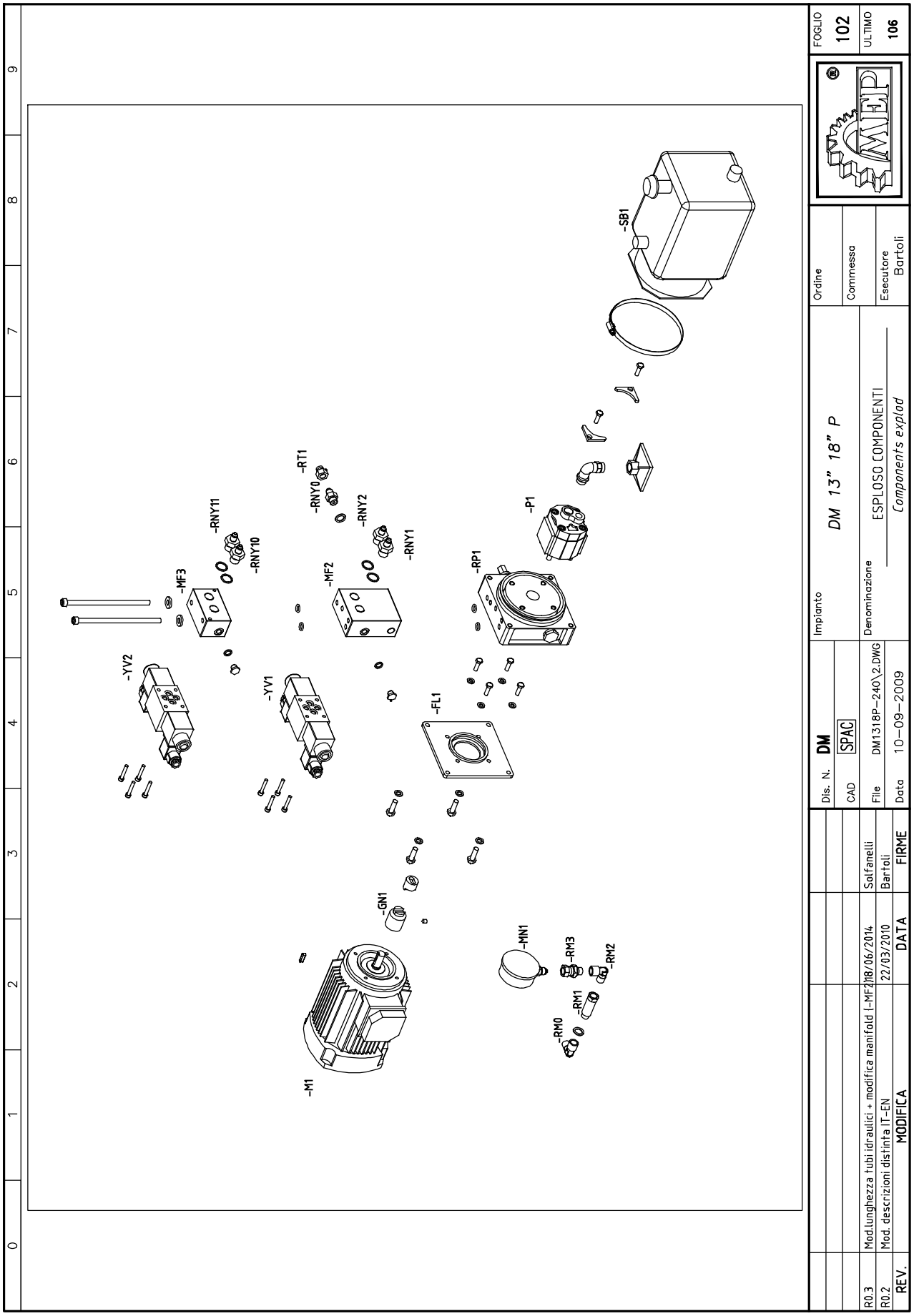
-SB1
-P1
-RP1
-RNY1
-RNY2
-RT1
-RNY0
-MF2
-RNY11
-RNY10
-MF3
-YV2
-YV1
-FL1
-GN1
-M1
-MN1
-RM3
-RM2
-RM1
-RM0
FOGLIO
102
ULTIMO
106
Ordine
Commessa
Esecutore
Bartoli
Impianto
DM 13" 18" P
Denominazione
ESPLOSO COMPONENTI
Components explod
Dis. N.
DM
CAD
SPAC
File
DM1318P-240\2.DWG
Data
10-09-2009
R0.3
Mod.lunghezza tubi idraulici + modifica manifold (-MF2)
18/06/2014
Solfanelli
R0.2
Mod. descrizioni distinta IT-EN
22/03/2010
Bartoli
REV.
MODIFICA
DATA
FIRME

0	1	2	3	4	5	6	7	8	9

Nome/Item	Tipo/Type	Descrizione/Description	Costruttore/Marke	Quadro/Board	Fg/Sh	Q.ta/Q.ty
-C1	V.d.M.	Vedi distinta meccanica	Mep	=CiBmMep	101	1
-C2	V.d.M.	Vedi distinta meccanica	Mep	=CiBmMep	101	1
-K23	043.0585	Regolatore di flusso con by-pass baffo C da 1/4"G	Mep	=CiBmMep	101	1
-RCU1	000.0P67	Riduzione gomito M/M da 1/4"G	Mep	=CiBmMep	101	1
-RCU2	000.0P67	Riduzione gomito M/M da 1/4"G	Mep	=CiBmMep	101	1
-RCU3	043.0275	Nipplo da 1/4"G	Mep	=CiBmMep	101	1
	043.0250	Riduzione gomito M/F da 1/4"G	Mep			1
-RCU4	043.0275	Nipplo da 1/4"G	Mep	=CiBmMep	101	1
	043.0250	Riduzione gomito M/F da 1/4"G	Mep			1
-RNY12	043.0275	Nipplo da 1/4"G	Mep	=CiBmMep	101	1
-RNY13	043.0275	Nipplo da 1/4"G	Mep	=CiBmMep	101	1
-RNY5	043.0275	Nipplo da 1/4"G	Mep	=CiBmMep	101	2
-RNY6	043.0275	Nipplo da 1/4"G	Mep	=CiBmMep	101	2
-T1	044.0153	Tubo idraulico 1/4"G 5000 D-G	Mep	=CiBmMep	101	1
-T2	044.0151	Tubo idraulico 1/4"G 3500 D-G	Mep	=CiBmMep	101	1
-T3	044.0170	Tubo idraulico 1/4"G 6800 D-D	Mep	=CiBmMep	101	1
-T5	044.0107	Tubo idraulico 1/4"G 1500 G-G	Mep	=CiBmMep	101	1
-T6	044.0107	Tubo idraulico 1/4"G 1500 G-G	Mep	=CiBmMep	101	1
-FL1	044.5154	Flangia accoppiamento motore C71 B14	Mep	=CiCv	101	1
-FT1	0ID.00P5	Filtro aspirazione Ø80 250µ 3/8"Gf 200.5461.12010 BUCHER	Mep	=CiCv	101	1
-GN1	044.4637	Giunto elas. lato pompa AP100 S309	Mep	=CiCv	101	1
	044.4638	Giunto elas. lato motore C80 B14 -drive 131 200.6594.0019.0 Bucher	Mep			1
-IU1	034.1383	Supporto esterno pompa BUCHER	Mep	=CiCv	101	1
-M1	019.4006	Motore da 0,5Hp C71 B14 V230-415-50Hz / V240-480-60Hz	Mep	=CiCv	101	1
-MF2	007.6714	Manifold idraulico 1 posto CETOP 3 e uscita manomnetro + uscita scarico per housing BUCHER	Mep	=CiCv	101	1
-MF3	007.6691	Manifold 1 valvole DIN24350 circuito chiuso	Mep	=CiCv	101	1
-MN1	043.0557	Manometro 0-60bar Ø40 con attacco radiale da 1/4"G	Mep	=CiCv	101	1
-P1	044.4513	Pompa ingranaggi 1,7cc/g AP100/1.7 S.309 200.7482.20020 BUCHER	Mep	=CiCv	101	1
-RM0	043.0250	Raccordo gomito M/F da 1/4"G	Mep	=CiCv	101	1
-RM1	043.0274	Raccordo diritto M/F da 1/4"G	Mep	=CiCv	101	1
-RM2	043.0250	Riduzione gomito M/F da 1/4"G	Mep	=CiCv	101	1
-RM3	043.0553	Raccordo girevole 1/4"G idraulico per manometro	Mep	=CiCv	101	1
-RNY0	007.8023	Nipplo ID. MM 1/4"G - 7/16 UNF	Mep	=CiCv	101	1
-RNY1	007.8020	Riduzione diritta M/M da 3/8"G a 7/16 UNF	Mep	=CiCv	101	1
-RNY10	007.8020	Riduzione diritta M/M da 3/8"G a 7/16 UNF	Mep	=CiCv	101	1
-RNY11	007.8020	Riduzione diritta M/M da 3/8"G a 7/16 UNF	Mep	=CiCv	101	1
-RNY2	007.8020	Riduzione diritta M/M da 3/8"G a 7/16 UNF	Mep	=CiCv	101	1
-RP1	044.1263	Valvola di massima pressione idraulica a cartuccia 200.9874.00700 BUCHER	Mep	=CiCv	101	1
-RR1	0ID.00P8	Tubo aspirazione M-M 3/8"G lungo 120mm con gomito	Mep	=CiCv	101	1
-RT1	044.4556	Tappo per manicotto 7/16 UNF	Mep	=CiCv	101	1
-SB1	0ID.0P20	Vasca olio 2,5Lt tipo P-025Q-F 200.9734.2007.0	Mep	=CiCv	101	1
-VB1	044.4554	Valvola di blocco idraulica a cartuccia 200.7876.01410 BUCHER	Mep	=CiCv	101	1
-YV1	043.1002	Elettrovalvola idraulica 4/2 con bobine 24 Vcc	Mep	=CiCv	101	1
-YV2	043.1002	Elettrovalvola idraulica 4/3 con bobine 24 Vcc	Mep	=CiCv	101	1

REV.	MODIFICA	DATA	FIRME
R0.3	Mod.lunghezza tubi idraulici + modifica manifold (-MF2)	18/06/2014	Solfanelli
R0.2	Mod. descrizioni distinta IT-EN	22/03/2010	Bartoli

Dis. N. DM
CAD SPAC
File DM1318P-240\2.DWG
Data 10-09-2009

Impianto: DM 13" 18" P
Denominazione: DISTINTA MATERIALI
MATERIAL LIST

Ordine
Commessa
Esecutore: Bartoli

MEP

FOGLIO 103
ULTIMO 106

LISTA FOGLI \ INDEX

Foglio Sheet	Descrizione Description	Revisione \ Revision 0	1	2	3	4	5	6	7	8	9
1	INDICE CONTENUTI										
	Content index										
2	INDICE CONTENUTI										
	Content index										
3	LEGENDA SIMBOLI										
	Symbol key										
4	ALIMENTAZIONE										
	Power supply										
5	ALIMENTAZIONE MOTORI										
	Motor power supply										
6	ALIMENTAZIONE TRASFORMATORI										
	Transformer power supply										
7	ALIMENTAZIONE AUSILIARI										
	Auxiliary power supply										
8	EMERGENZA E PRESSOSTATO										
	Emergency and pressure switch										
9	AUSILIARI INVERTER										
	Inverter auxiliary circuits										
10	MEP30										
	Mep30										
11	LISTA INPUT/OUTPUT										
	Input/Output list										
12	INGRESSI MEP30										
	Mep30 inputs										
13	INGRESSI MEP30										
	Mep30 inputs										

Foglio Sheet	Descrizione Description	Revisione \ Revision 0	1	2	3	4	5	6	7	8	9
14	USCITE MEP30										
	mep30 outputs										
15	USCITE MEP30										
	mep30 outputs										
16	INGRESSI ANALOGICI MEP30										
	Mep30 analogic inputs										
17	COLLEGAMENTO ENCODER										
	Encoder connection										
18	OPTIONAL										
	Optional										
19	MORSETTIERA QUADRO										
	Panel terminal board										
20	INTERNO QUADRO										
	Board inside										
21	GUAINE E ACCESSORI										
	Sheaths and accessories										
22	GUAINE E ACCESSORI										
	Sheaths and accessories										
23	RIASSUNTIVO CAVI										
	Cable summary										
24	RIASSUNTIVO CAVI										
	Cable summary										
25	RIASSUNTIVO CAVI										
	Cable summary										
26	DISTINTA MATERIALI										
	Material list										

Note :

REV.	MODIFICA	DATA	FIRME
R0.2	Mod. lay-out Mep30 descrizioni e distinta IT-EN	22/03/2010	Bartoli
R0.1	Aggiunto traguardatore laser e luce zona taglio	23/09/2009	Bartoli

Dis. N. DM
CAD SPAC
File DM1318P-240\1.DWG
Data 10-09-2009

Impianto: DM 13" 18" P - 240
Denominazione: INDICE CONTENUTI / Content index
Ordine
Commessa
Esecutore: Bartoli

FOGLIO 1
ULTIMO 103

LISTA FOGLI \ INDEX

Foglio Sheet	Descrizione Description	Revisione \ Revision 0	1	2	3	4	5	6	7	8	9
27	DISTINTA MATERIALI										
	Material list										
28	DISTINTA MATERIALI										
	Material list										
29	DISTINTA MATERIALI										
	Material list										
100	LISTA SIMBOLI										
	Simbol key										
101	CENTRALINA IDRAULICA										
	Oil unit central										
102	DISTINTA CENTRALINA										
	Oil unit material list										
103	DISTINTA CENTRALINA										
	Oil unit material list										

Foglio Sheet	Descrizione Description	Revisione \ Revision 0	1	2	3	4	5	6	7	8	9

Note :

REV.	MODIFICA	DATA	FIRME
R0.2	Mod. lay-out Mep30 descrizioni e distinta IT-EN	22/03/2010	Bartoli
R0.1	Aggiunto traguardatore laser e luce zona taglio	23/09/2009	Bartoli

Dis. N. DM
CAD SPAC
File DM1318P-240\1.DWG
Data 10-09-2009

Impianto: DM 13" 18" P - 240
Denominazione: INDICE CONTENUTI
Content index

Ordine
Commessa
Esecutore: Bartoli

FOGLIO 2
ULTIMO 103

Sim.\Sym.	File	Descrizione\Description
	M2	Motore asincrono trifase *THREE-PHASE INDUCTION MOTOR*
	Q1360	Int. automatico magnetotermico sezionatore tripolare *THREE-PHASE AUITOMATIC SWITCH*
	R6	Potenziometro *POTENTIOMETER*
	R60	Potenziometro *POTENTIOMETER*
	S2	Comando a Pulsante NO *PUSH BOTTON NO*
	S4C	Pulsante di emergenza NC *EMERGENCY PUSH BOTTON NC*
	S5	Comando rotativo a due posizioni NO *ROTARY SELECTOR TWO POSITION*
	S7	Comando a pedale NO *CONTROL PEDAL NO*
	S8	Comandato dalla pressione (pressostato) NO *PRESSURE SWITCH*
	S15C	Comandato dal livello di un fluido (livellostato) NC *WATER GAUGE NC*
	S24C	Pulsante di emergenza a posizione stabile NC *EMERGENCY PUSH BOTTON NC*

Sim.\Sym.	File	Descrizione\Description
	T1	Trasformatore di corrente *CURRENT TRASFORMER*
	Y1	Elettrovalvola aperta (in chiusura) *SOLENOID VALVE*
	KA1	Bobina rele' Aux *AUXILIARY RELAY COIL*
	KM1	Bobina contattore *CONTACTOR COIL*
	BLK26	Connettore EV in AC *SV AC CONNECTOR*
	BLK41	Raccordo SX *CONNECTOR SX*
	BLK42	Raccordo DX *CONNECTOR DX*
	BLK43	Tubo corrugato *CORRUGATED PIPE*
	BLK44	Riduzione PG *PG ADAPTER*
	BLK51	Dado PG *NUT PG*
	BLK49	Pressa-cordone PG *FAIR LEAD*

Sim.\Sym.	File	Descrizione\Description
	BLK50	Guaina termorestringente Ø26mm *SHEATH Ø26mm*
	BLK57	Guaina termorestringente Ø10mm *SHEATH Ø10mm*
	BLK55	Flangia di passaggio *LOOSE FLANGE*
	BLK56	Terminale a puntale *TERMINAL*
	BLK57	Filo unipolare *WIRE*
	BLK58	Fascette plastiche di fissaggio *CLAMP*
	BLK60	Terminale a occhiello *TERMINAL*
	BLK66	Sacchetto portafusibile *BAG FUSE*

REV.	MODIFICA	DATA	FIRME
R0.2	Mod. lay-out Mep30 descrizioni e distinta IT-EN	22/03/2010	Bartoli
R0.1	Aggiunto traguardatore laser e luce zona taglio	23/09/2009	Bartoli

Dis. N. DM
CAD SPAC
File DM1318P-240\1.DWG
Data 10-09-2009

Impianto: *DM 13" 18" P - 240*
Denominazione: LEGENDA SIMBOLI
Symbol key

Ordine
Commessa
Esecutore: Bartoli

FOGLIO 3
ULTIMO 103

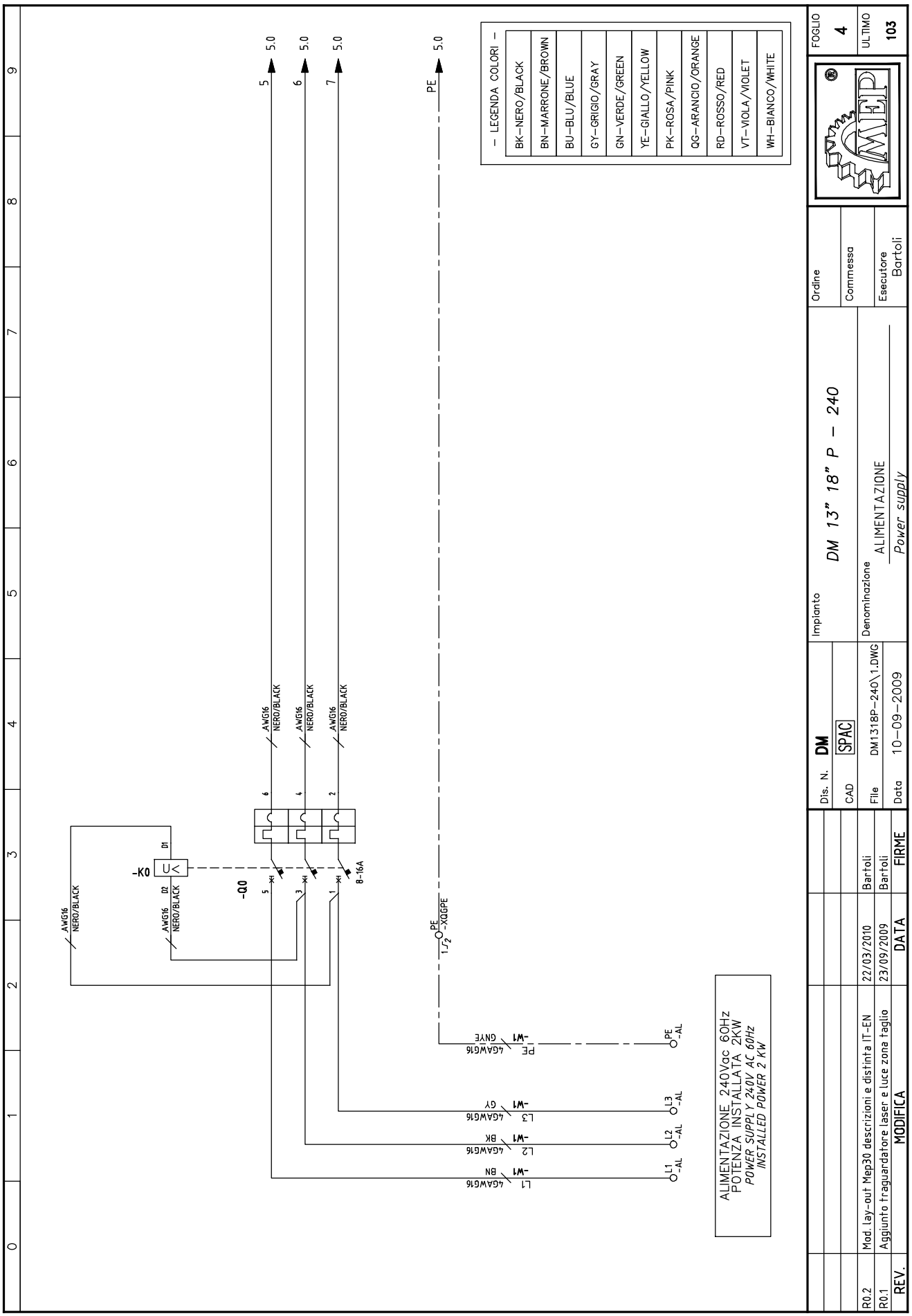
– LEGENDA COLORI –
BK–NERO/BLACK
BN–MARRONE/BROWN
BU–BLU/BLUE
GY–GRIGIO/GRAY
GN–VERDE/GREEN
YE–GIALLO/YELLOW
PK–ROSA/PINK
QG–ARANCIO/ORANGE
RD–ROSSO/RED
VT–VIOLA/VIOLET
WH–BIANCO/WHITE
ALIMENTAZIONE 240Vac 60Hz
POTENZA INSTALLATA 2KW
POWER SUPPLY 240V AC 60Hz
INSTALLED POWER 2 KW
DM 13" 18" P – 240
ALIMENTAZIONE
Power supply
Dis. N. DM
CAD SPAC
File DM1318P–240\1.DWG
Data 10–09–2009
Impianto
Denominazione
Ordine
Commessa
Esecutore Bartoli
FOGLIO 4
ULTIMO 103
MEP
R0.2 Mod. lay-out Mep30 descrizioni e distinta IT-EN 22/03/2010 Bartoli
R0.1 Aggiunto traguardatore laser e luce zona taglio 23/09/2009 Bartoli
REV. MODIFICA DATA FIRME

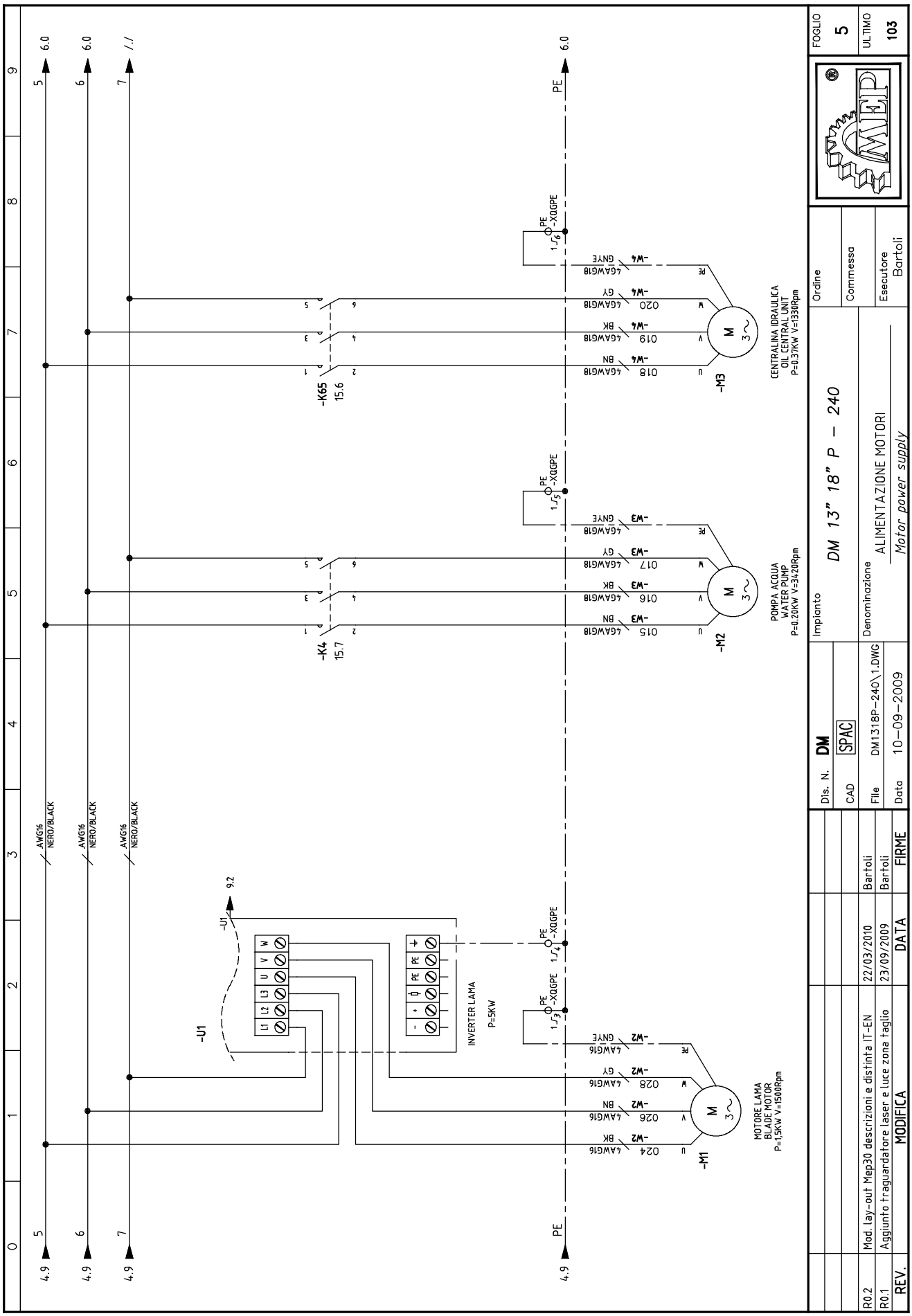
-M1
MOTORE LAMA
BLADE MOTOR
P=1,5KW V=1500Rpm
-M2
POMPA ACQUA
WATER PUMP
P=0,20KW V=3420Rpm
-M3
CENTRALINA IDRAULICA
OIL CENTRAL UNIT
P=0,37KW V=1330Rpm
-K4
15.7
-K65
15.6
-U1
INVERTER LAMA
P=5KW
AWG16
NERO/BLACK
FOGLIO
5
ULTIMO
103
Ordine
Commessa
Esecutore
Bartoli
Impianto
DM 13" 18" P - 240
Denominazione
ALIMENTAZIONE MOTORI
Motor power supply
Dis. N.
DM
CAD
SPAC
File
DM1318P-240\1.DWG
Data
10-09-2009
R0.2
Mod. lay-out Mep30 descrizioni e distinta IT-EN
22/03/2010
Bartoli
R0.1
Aggiunto traguardatore laser e luce zona taglio
23/09/2009
Bartoli
REV.
MODIFICA
DATA
FIRME

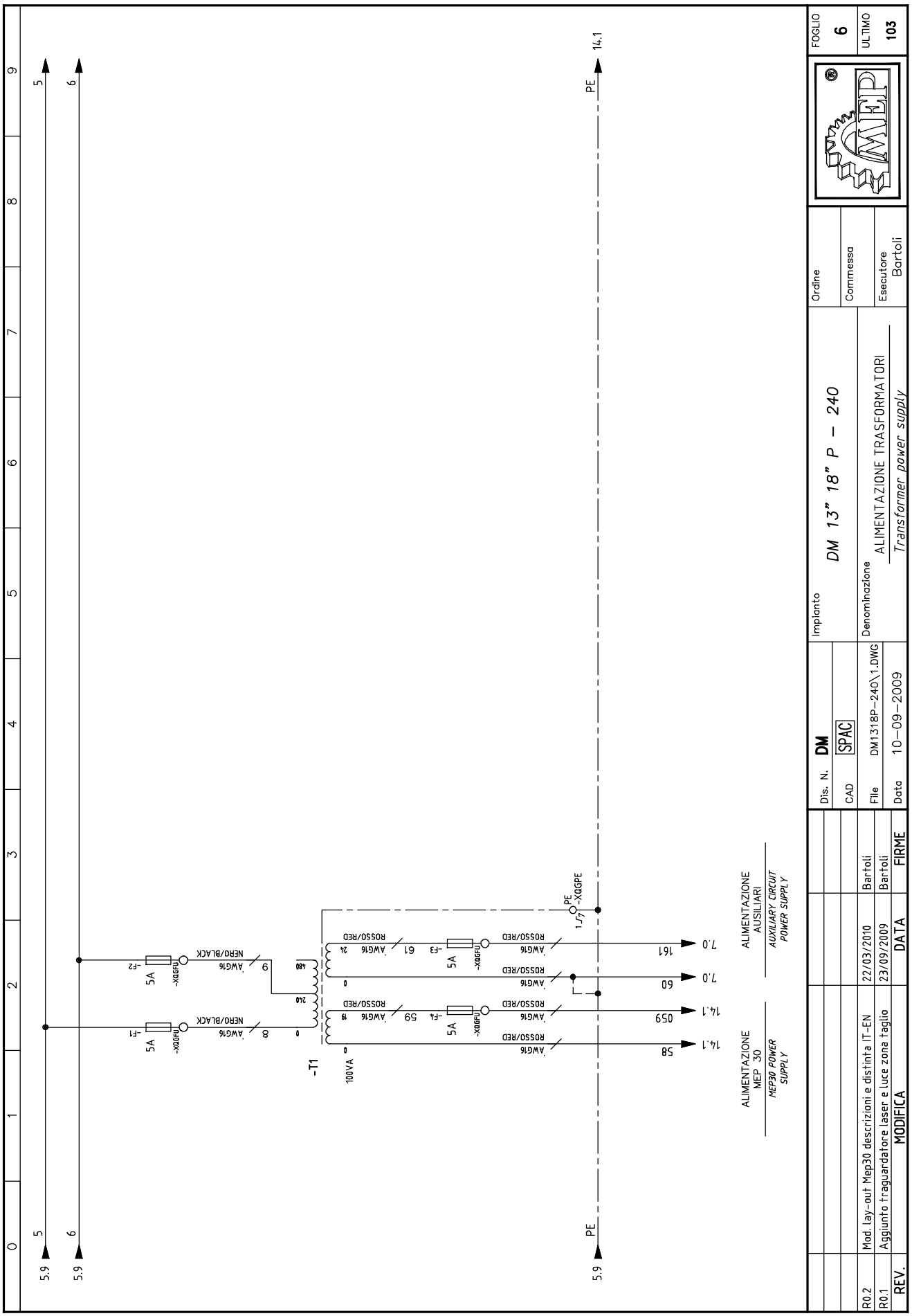
FOGLIO 6
ULTIMO 103
Ordine
Commessa
Esecutore Bartoli
Impianto
DM 13" 18" P – 240
Denominazione
ALIMENTAZIONE TRASFORMATORI
Transformer power supply
Dis. N. DM
CAD SPAC
File DM1318P-240\1.DWG
Data 10-09-2009
ALIMENTAZIONE AUSILIARI
AUXILIARY CIRCUIT POWER SUPPLY
ALIMENTAZIONE MEP 30
MEP30 POWER SUPPLY
-T1
100VA
5A
-F1
-F2
-F3
-F4
-XQGFU
NERO/BLACK
ROSSO/RED
AWG16
-XQGPE
PE
REV.
DATA
FIRME
R0.2 Mod. lay-out Mep30 descrizioni e distinta IT-EN 22/03/2010 Bartoli
R0.1 Aggiunto traguardatore laser e luce zona taglio 23/09/2009 Bartoli
MODIFICA

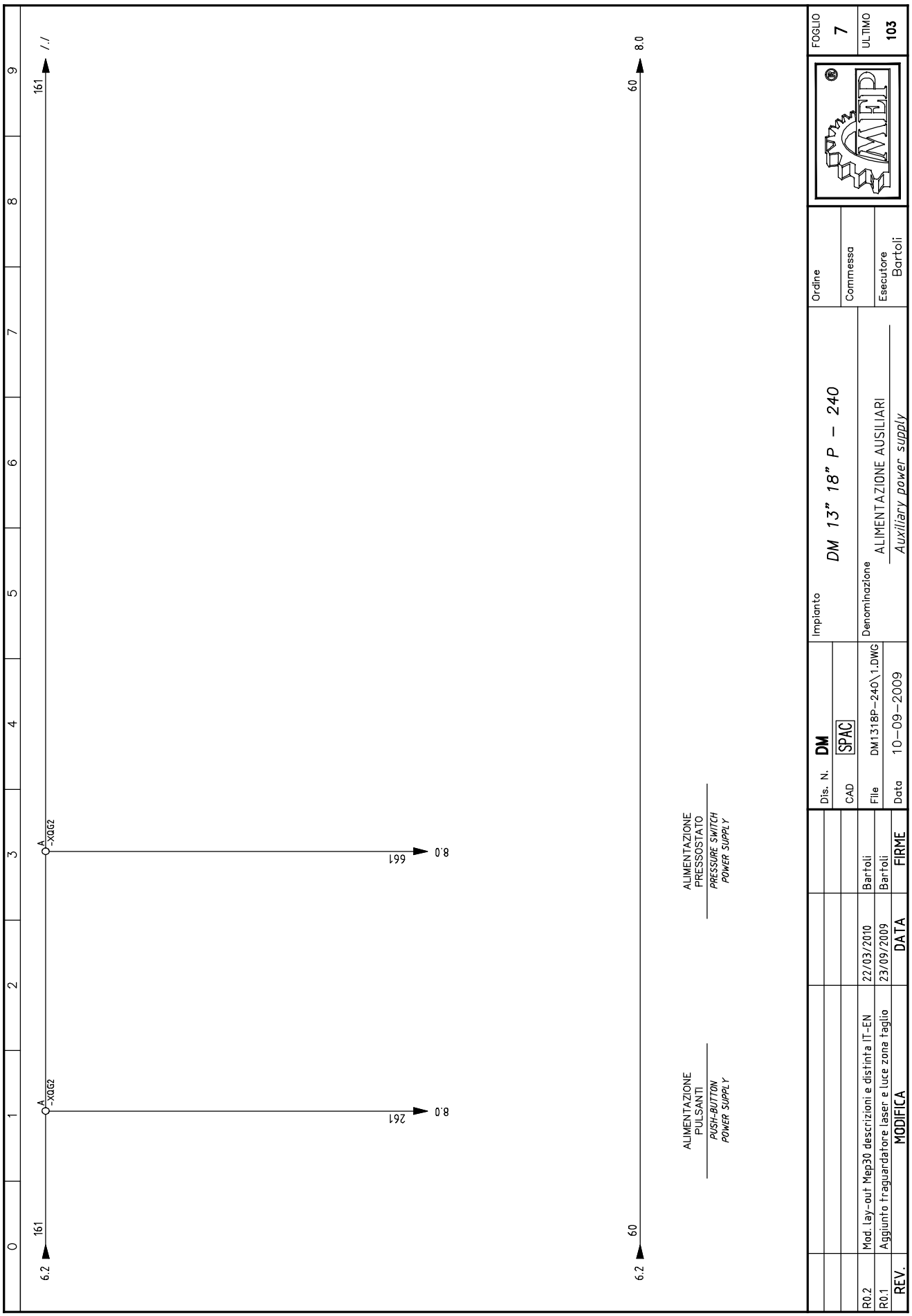
0
1
2
3
4
5
6
7
8
9
./.
161
6.2
-XQG2
A
261
8.0
661
60
ALIMENTAZIONE PULSANTI
PUSH-BUTTON POWER SUPPLY
ALIMENTAZIONE PRESSOSTATO
PRESSURE SWITCH POWER SUPPLY
Dis. N. DM
CAD SPAC
File DM1318P-240\1.DWG
Data 10-09-2009
Impianto
DM 13" 18" P - 240
Denominazione
ALIMENTAZIONE AUSILIARI
Auxiliary power supply
Ordine
Commessa
Esecutore Bartoli
FOGLIO 7
ULTIMO 103
R0.2 Mod. lay-out Mep30 descrizioni e distinta IT-EN 22/03/2010 Bartoli
R0.1 Aggiunto traguardatore laser e luce zona taglio 23/09/2009 Bartoli
REV. MODIFICA DATA FIRME

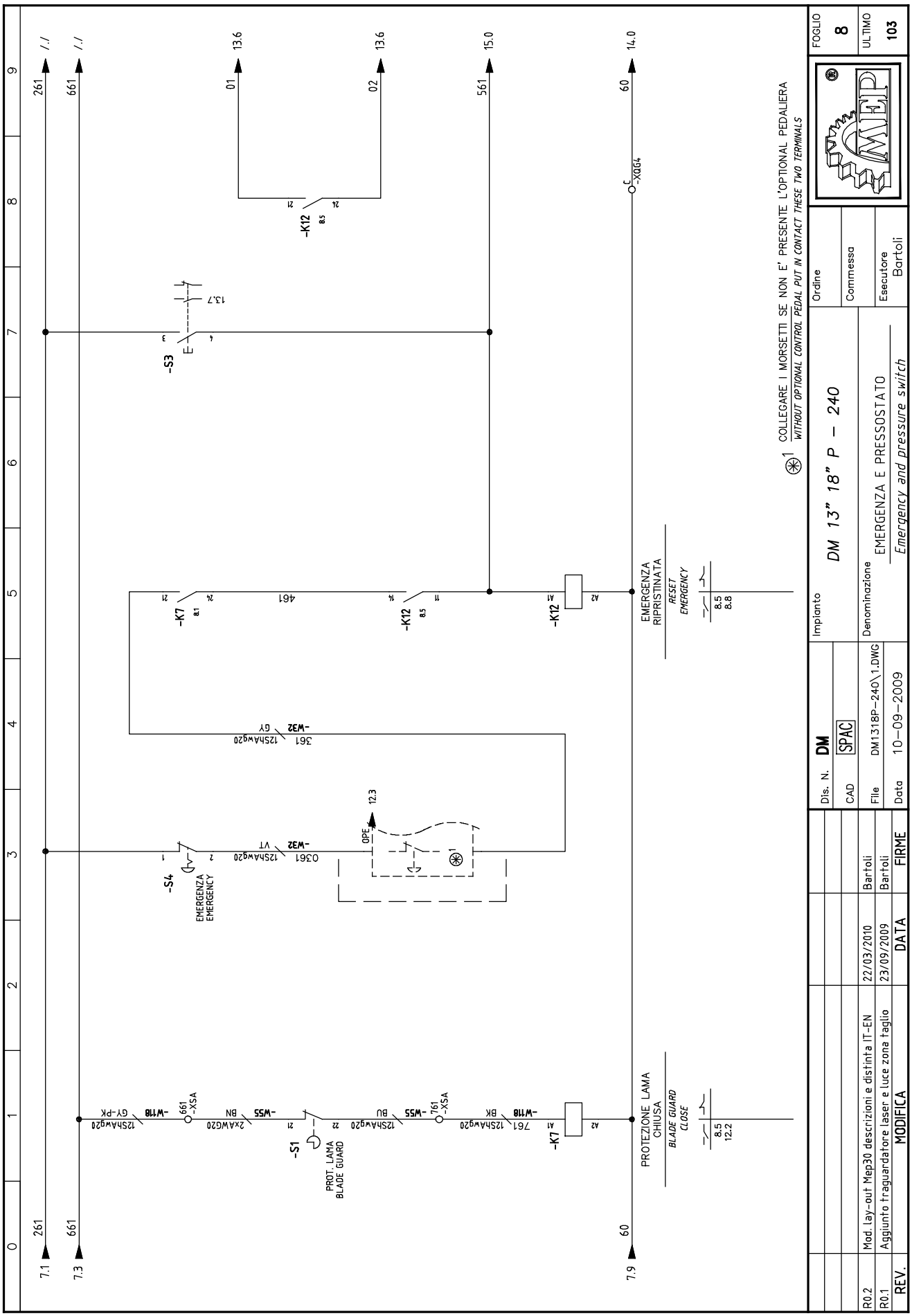
COLLEGARE I MORSETTI SE NON E' PRESENTE L'OPTIONAL PEDALIERA
WITHOUT OPTIONAL CONTROL PEDAL PUT IN CONTACT THESE TWO TERMINALS
EMERGENZA RIPRISTINATA
RESET EMERGENCY
PROTEZIONE LAMA CHIUSA
BLADE GUARD CLOSE
EMERGENZA EMERGENCY
PROT. LAMA BLADE GUARD
-S1
-S3
-S4
-K7
-K12
-W32
-W118
-W55
-XSA
-XDG4
OPE
261
661
01
02
561
60
7.1
7.3
7.9
13.6
15.0
14.0
12.3
13.7
Dis. N. DM
CAD SPAC
Impianto
DM 13" 18" P – 240
Denominazione
EMERGENZA E PRESSOSTATO
Emergency and pressure switch
Ordine
Commessa
Esecutore Bartoli
FOGLIO 8
ULTIMO 103
MEP
File DM1318P-240\1.DWG
Data 10-09-2009
REV. MODIFICA DATA FIRME
R0.2 Mod. lay-out Mep30 descrizioni e distinta IT-EN 22/03/2010 Bartoli
R0.1 Aggiunto traguardatore laser e luce zona taglio 23/09/2009 Bartoli

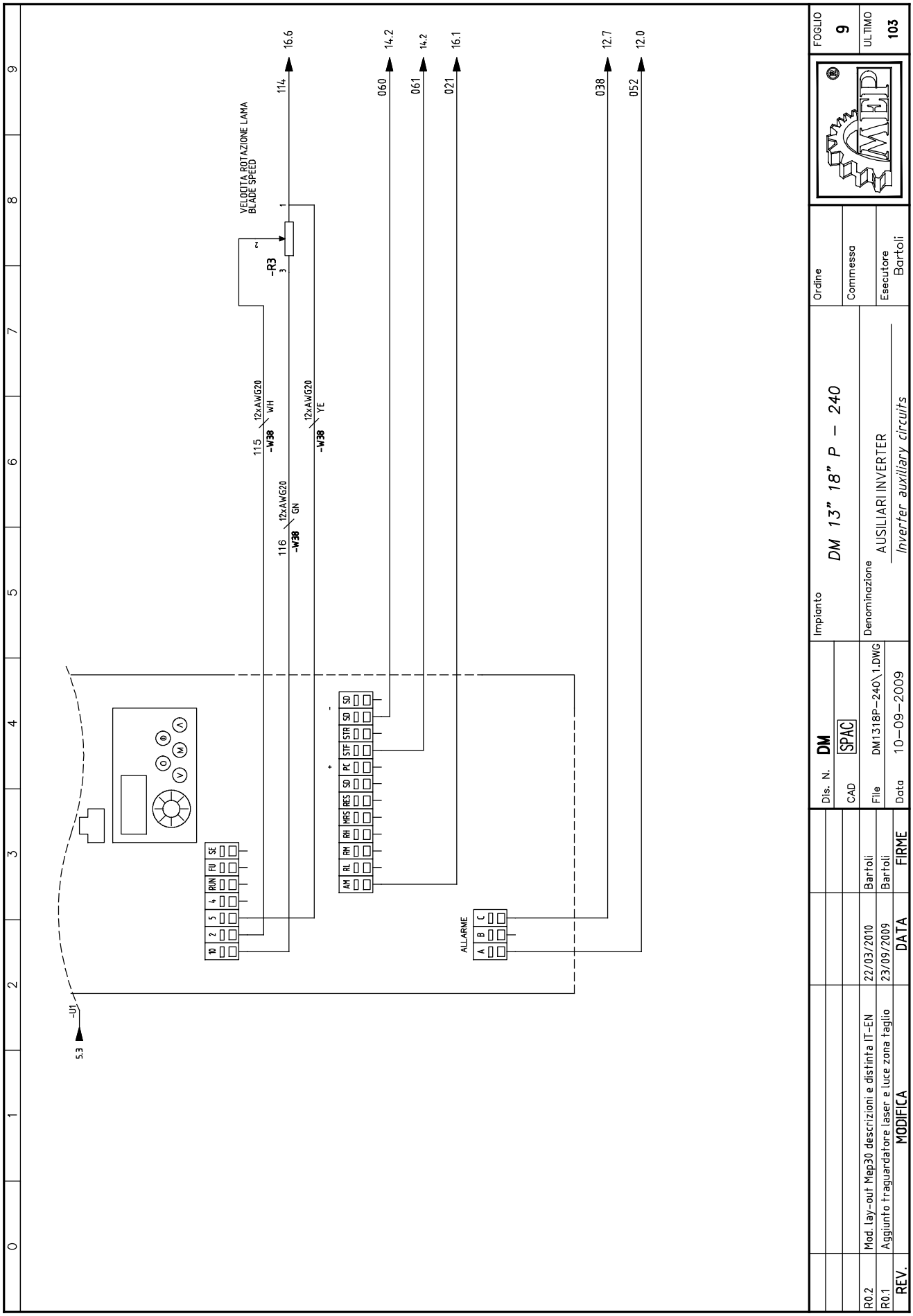
VELOCITA ROTAZIONE LAMA
BLADE SPEED
-R3
114
16.6
060
14.2
061
14.2
021
16.1
038
12.7
052
12.0
115
116
12xAWG20
WH
GN
YE
-W38
-U1
5.3
ALLARME
FOGLIO
9
ULTIMO
103
Ordine
Commessa
Esecutore
Bartoli
Impianto
DM 13" 18" P - 240
Denominazione
AUSILIARI INVERTER
Inverter auxiliary circuits
Dis. N.
DM
CAD
SPAC
File
DM1318P-240\1.DWG
Data
10-09-2009
R0.2
Mod. lay-out Mep30 descrizioni e distinta IT-EN
22/03/2010
Bartoli
R0.1
Aggiunto traguardatore laser e luce zona taglio
23/09/2009
Bartoli
REV.
MODIFICA
DATA
FIRME

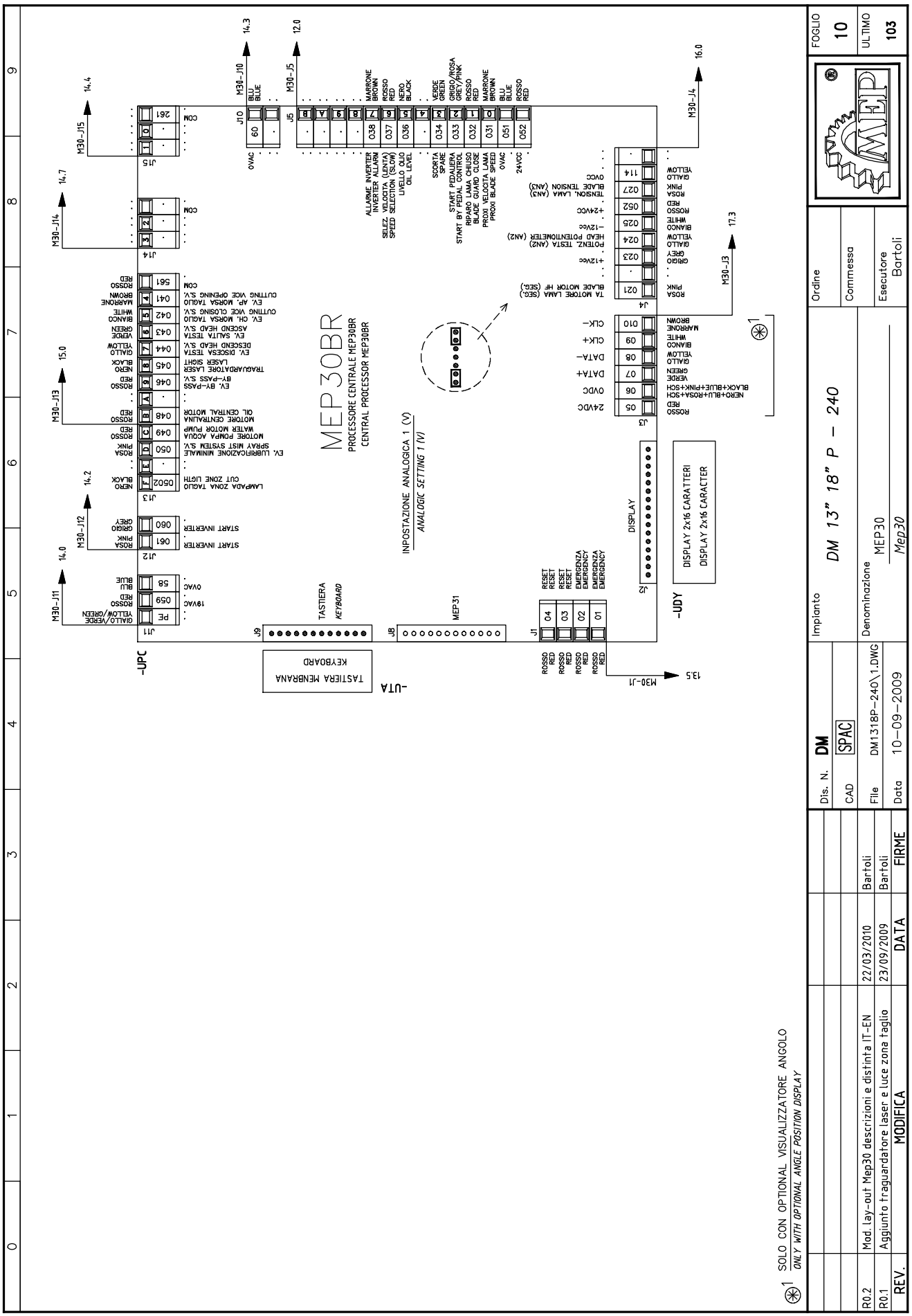
MEP30BR
PROCESSORE CENTRALE MEP30BR
CENTRAL PROCESSOR MEP30BR
INPOSTAZIONE ANALOGICA 1 (V)
ANALOGIC SETTING 1 (V)
-UPC
-UTA
-UDY
TASTIERA MENBRANA
KEYBOARD
DISPLAY 2x16 CARATTERI
DISPLAY 2x16 CARACTER
SOLO CON OPTIONAL VISUALIZZATORE ANGOLO
ONLY WITH OPTIONAL ANGLE POSITION DISPLAY
Impianto
DM 13" 18" P - 240
Denominazione
MEP30
Mep30
Ordine
Commessa
Esecutore
Bartoli
FOGLIO
10
ULTIMO
103
Dis. N.
DM
CAD
SPAC
File
DM1318P-240\1.DWG
Data
10-09-2009
REV.
MODIFICA
DATA
FIRME
R0.2
Mod. lay-out Mep30 descrizioni e distinta IT-EN
22/03/2010
Bartoli
R0.1
Aggiunto traguardatore laser e luce zona taglio
23/09/2009
Bartoli

0	1	2	3	4	5	6	7	8	9

J1 4PIN — EMERGENZA/RESET / *EMERGENCY/RESET*

01	ROSSO / *RED*	EMERGENZA / *EMERGENCY*
02	ROSSO / *RED*	EMERGENZA / *EMERGENCY*
03	ROSSO / *RED*	RESET / *RESET*
04	ROSSO / *RED*	RESET / *RESET*

J2 16PIN — DISPLAY / *DISPLAY*

J3 6PIN — INGRESSI ENCODER / *ENCODER INPUT*

05	ROSSO / *RED*	ALIMENTAZIONE (+24V) / *POWER SUPPLY (+24V)*
06	BLU+ROSA+NERO / *BLUE+PINK+BLACK*	ALIMENTAZIONE (0V) / *POWER SUPPLY (0V)*
07	VERDE / *GREEN*	DATA + / *DATA +*
08	GIALLO / *YELLOW*	DATA – / *DATA -*
09	BIANCO / *WHITE*	CLOCK + / *CLOCK+*
010	MARRONE / *BROWN*	CLOCK – / *CLOCK -*

J4 9PIN — INGRESSI ANALOGICI / *ANALOG INPUT*

021	ROSA / *PINK*	TA MOTORE LAMA (SEG.) / *BLADE MOTOR HF (SEG.)*
//	NC / *NC*	NC / *NC*
023	GRIGIO / *GREY*	ALIMENTAZIONE POT.(+12V) / *POT. POWER SUPPLY (+ 12 V)*
024	GIALLO / *YELLOW*	POTENZIOMETRO TESTA / *HEAD POTENTIOMETER*
025	BIANCO / *WHITE*	ALIMENTAZIONE POT. (0V) / *POT. POWER SUPPLY (0 V)*
052	ROSSO / *RED*	ALIMENTAZIONE AN3 (+24V) / *AN3 POWER SUPPLY (+24V)*
027	ROSA / *PINK*	TENS. LAMA (0–10V SEGN.) / *BLADE TENSION (0-10V SIGN.)*
114	GIALLO / *YELLOW*	ALIMENTAZIONE AN3 (0V) / *AN3 POWER SUPPLY (0V)*
//	NC / *NC*	NC / *NC*

J5 14PIN — INGRESSI DIGITALI MEP 30 / *MEP 30 DIGITAL INPUTS*

052	ROSSO / *RED*	24VCC / *24VCC*
051	BLU / *BLUE*	0VCC / *0VCC*
031	MARRONE / *BROWN*	PROXI VELOCITA LAMA / *PROXI BLADE SPEED*
032	ROSSO / *RED*	RIPARO LAMA CHIUSO / *BLADE GUARD CLOSE*
033	GRIGIO/ROSA / *GREY/PINK*	START DA PEDALIERA / *START BY PEDAL CONTROL*
034	VERDE / *GREEN*	SCORTA / *SPARE*
//	NC / *NC*	NC / *NC*
036	NERO / *BLACK*	LIVELLO OLIO / *OIL LEVEL*
037	ROSSO / *RED*	SELEZ. VELOCITA / *SPEED SELECTION*
038	MARRONE / *BROWN*	ALLARME INVERTER / *INVERTER ALLARM*
//	NC / *NC*	NC / *NC*
//	NC / *NC*	NC / *NC*
//	NC / *NC*	NC / *NC*
//	NC / *NC*	NC / *NC*

J8 12PIN — MEP 31 / *MEP31*

J9 12PIN — TASTIERA / *KEYBOARD*

J10 2PIN — ALIMENTAZIONE USCITE / *OUTPUT POWER SUPPLY*

•	NC / *NC*	NC / *NC*
60	BLU / *BLUE*	0VAC / *0VAC*

J11 3PIN — ALIMENTAZIONE MEP30 / *POWER SUPPLY MEP30*

58	BLU / *BLUE*	0VAC / *0VAC*
059	ROSSO / *RED*	19VAC / *19VAC*
//	GIALLO/VERDE / *YELLOW/GREEN*	PE / *PE*

J12 2PIN — MARCIA INVERTER / *INVERTER RUN*

060	GRIGIO / *GREY*	MARCIA INVERTER / *INVERTER RUN*
061	ROSA / *PINK*	MARCIA INVERTER / *INVERTER RUN*

J13 13PIN — USCITE DIGITALI C4–CF / *C4-CF DIGITAL OUTPUTS*

561	ROSSO / *RED*	COMUNE USCITE C4–CF / *COMMON OUTPUT C4-CF*
041	MARRONE / *BROWN*	EV. APERT. MORSA TAGLIO / *CUTTING VICE OPENING S.V.*
042	BIANCO / *WHITE*	EV.CHIUSURA MORSA TAGLIO / *CUTTING VICE CLOSING SV*
043	VERDE / *GREEN*	EV. SALITA TESTA / *ASCEND HEAD S.V.*
044	GIALLO / *YELLOW*	EV DISCESA TESTA / *DESCEND HEAD S.V.*
045	NERO / *BLACK*	TRAGUARDATORE LASER / *LASER SIGHT*
046	ROSSO / *RED*	EV. BY–PASS / *BY-PASS S.V.*
//	NC / *NC*	NC / *NC*
048	ROSSO / *RED*	MOTORE CENTRALINA / *OIL CENTRAL MOTOR*
049	ROSSO / *RED*	MOTORE POMPA ACQUA / *WATER MOTOR PUMP*
050	ROSA / *PINK*	EV. LUBRIF. MINIMALE / *SPRAY MIST SYSTEM S.V.*
//	NC / *NC*	NC / *NC*
0502	NERO / *BLACK*	LAMPADA ZONA TAGLIO / *CUT ZONE LIGTH*

REV.	MODIFICA	DATA	FIRME
R0.2	Mod. lay-out Mep30 descrizioni e distinta IT-EN	22/03/2010	Bartoli
R0.1	Aggiunto traguardatore laser e luce zona taglio	23/09/2009	Bartoli

Dis. N. DM
CAD SPAC
File DM1318P–240\1.DWG
Data 10–09–2009

Impianto: *DM 13" 18" P – 240*

Denominazione: LISTA INPUT/OUTPUT
Input/Output list

Ordine
Commessa
Esecutore: Bartoli

FOGLIO 11
ULTIMO 103

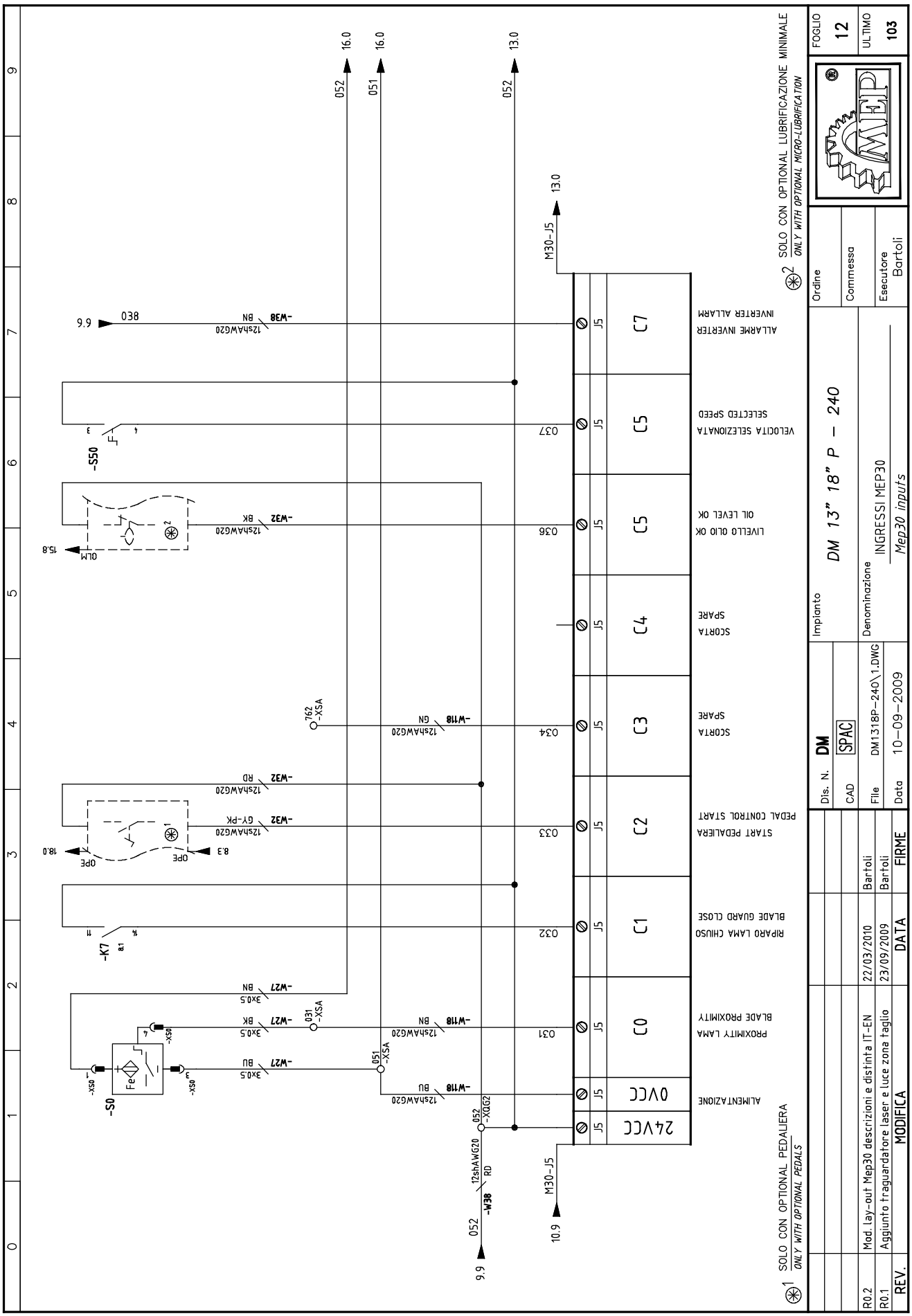
SOLO CON OPTIONAL LUBRIFICAZIONE MINIMALE
ONLY WITH OPTIONAL MICRO-LUBRIFICATION
SOLO CON OPTIONAL PEDALIERA
ONLY WITH OPTIONAL PEDALS
ALLARME INVERTER
INVERTER ALLARM
VELOCITA SELEZIONATA
SELECTED SPEED
LIVELLO OLIO OK
OIL LEVEL OK
SCORTA
SPARE
SCORTA
SPARE
START PEDALIERA
PEDAL CONTROL START
RIPARO LAMA CHIUSO
BLADE GUARD CLOSE
PROXIMITY LAMA
BLADE PROXIMITY
ALIMENTAZIONE
24VCC
0VCC
C7
C5
C5
C4
C3
C2
C1
C0
J5
M30-J5
-W38
-W2
-W18
-W27
-W36
-S50
-K7
-S0
OLM
OPE
Fe
FOGLIO
12
ULTIMO
103
Ordine
Commessa
Esecutore
Bartoli
Impianto
DM 13" 18" P – 240
Denominazione
INGRESSI MEP30
Mep30 inputs
Dis. N.
DM
CAD
SPAC
File
DM1318P-240\1.DWG
Data
10-09-2009
R0.2
Mod. lay-out Mep30 descrizioni e distinta IT-EN
22/03/2010
Bartoli
R0.1
Aggiunto traguardatore laser e luce zona taglio
23/09/2009
Bartoli
REV.
MODIFICA
DATA
FIRME

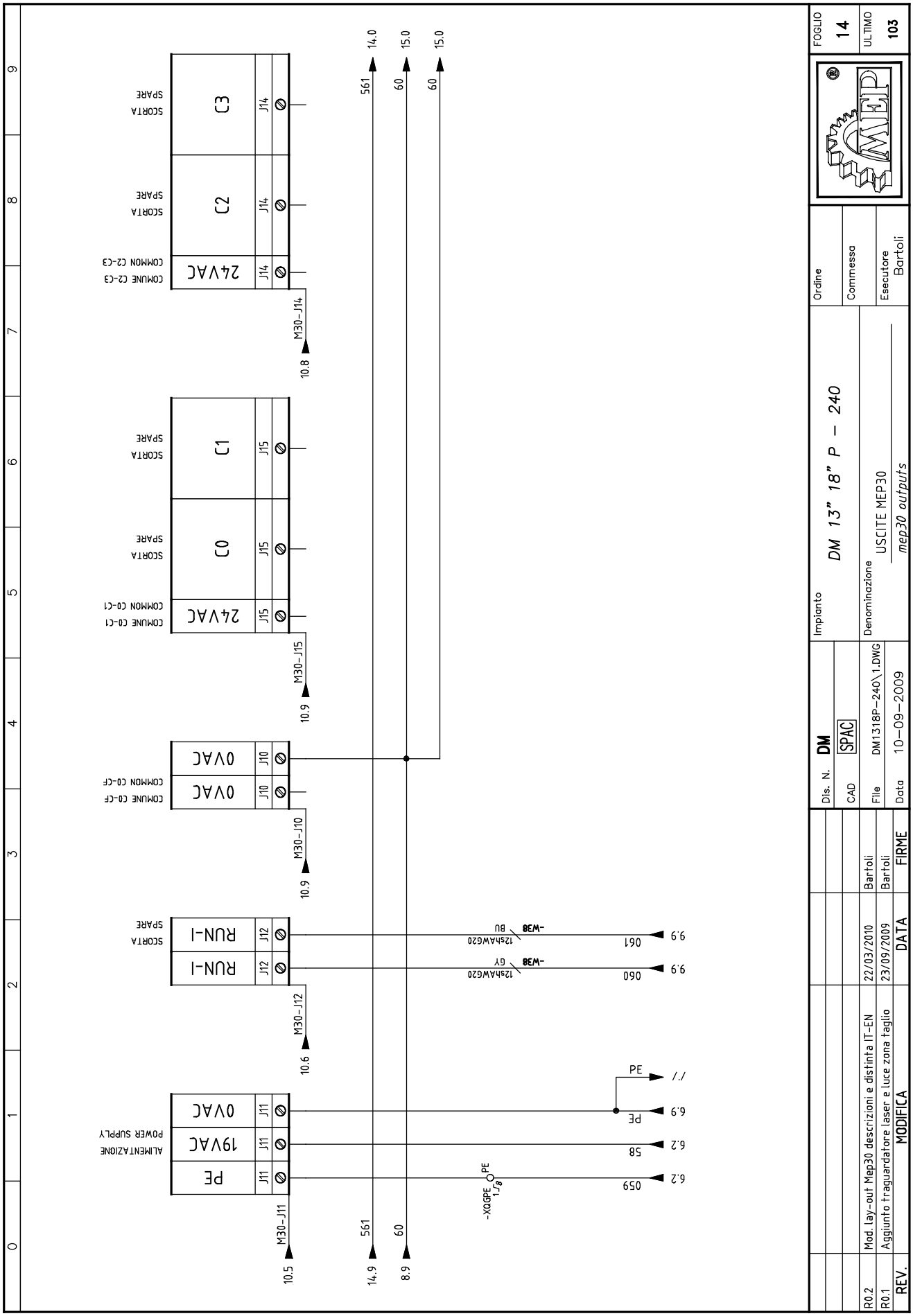
ALIMENTAZIONE
POWER SUPPLY
PE
19VAC
0VAC
J11
M30-J11
10.5
14.9
561
8.9
60
-XQGPE
1/8
PE
6.2
059
6.2
58
6.9
PE
./.
PE
10.6
M30-J12
RUN-I
RUN-I
J12
SCORTA
SPARE
-W38
125hAWG20
BU
061
9.9
-W38
125hAWG20
GY
060
9.9
10.9
M30-J10
0VAC
0VAC
J10
COMUNE C0-CF
COMMON C0-CF
10.9
M30-J15
24VAC
J15
COMUNE C0-C1
COMMON C0-C1
C0
C1
SCORTA
SPARE
10.8
M30-J14
24VAC
J14
COMUNE C2-C3
COMMON C2-C3
C2
C3
561
14.0
60
15.0
60
15.0
Impianto
DM 13" 18" P - 240
Denominazione
USCITE MEP30
mep30 outputs
Ordine
Commessa
Esecutore
Bartoli
FOGLIO
14
ULTIMO
103
Dis. N.
DM
CAD
SPAC
File
DM1318P-240\1.DWG
Data
10-09-2009
R0.2
Mod. lay-out Mep30 descrizioni e distinta IT-EN
22/03/2010
Bartoli
R0.1
Aggiunto traguardatore laser e luce zona taglio
23/09/2009
Bartoli
REV.
MODIFICA
DATA
FIRME

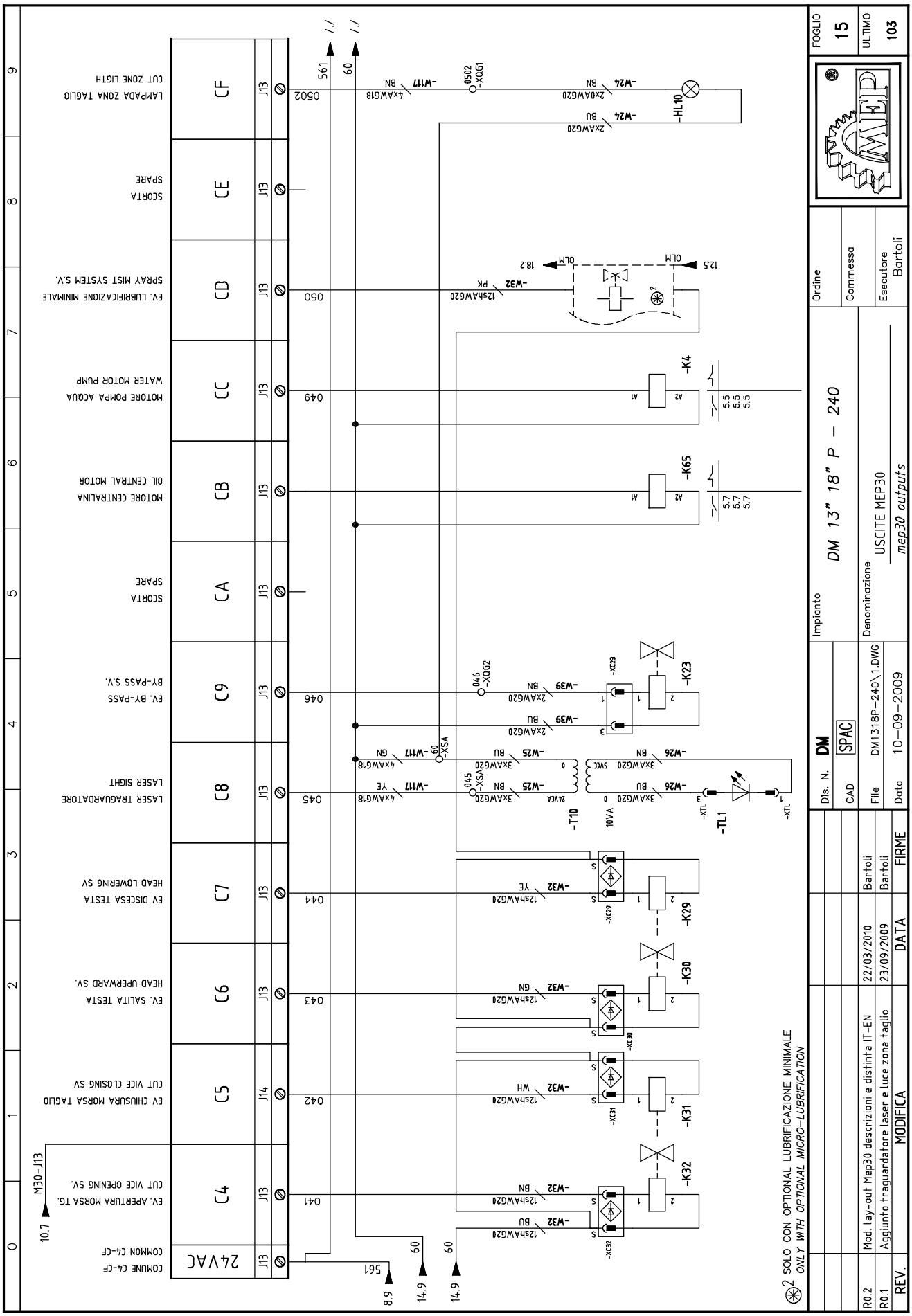
FOGLIO 15
ULTIMO 103
Ordine
Commessa
Esecutore Bartoli
Impianto
DM 13" 18" P – 240
Denominazione
USCITE MEP30
mep30 outputs
Dis. N. DM
CAD SPAC
File DM1318P-240\1.DWG
Data 10-09-2009
R0.2 Mod. lay-out Mep30 descrizioni e distinta IT-EN 22/03/2010 Bartoli
R0.1 Aggiunto traguardatore laser e luce zona taglio 23/09/2009 Bartoli
REV. MODIFICA DATA FIRME
SOLO CON OPTIONAL LUBRIFICAZIONE MINIMALE
ONLY WITH OPTIONAL MICRO-LUBRIFICATION
24VAC
COMUNE C4-CF
COMMON C4-CF
EV. APERTURA MORSA TG.
CUT VICE OPENING SV.
EV CHIUSURA MORSA TAGLIO
CUT VICE CLOSING SV
EV. SALITA TESTA
HEAD UPERWARD SV.
EV DISCESA TESTA
HEAD LOWERING SV
LASER TRAGUARDATORE
LASER SIGHT
EV. BY-PASS
BY-PASS S.V.
SCORTA
SPARE
MOTORE CENTRALINA
OIL CENTRAL MOTOR
MOTORE POMPA ACQUA
WATER MOTOR PUMP
EV. LUBRIFICAZIONE MINIMALE
SPRAY MIST SYSTEM S.V.
SCORTA
SPARE
LAMPADA ZONA TAGLIO
CUT ZONE LIGTH
-K32
-K31
-K30
-K29
-K23
-K65
-K4
-T10
-TL1
-HL10
-W32
-W39
-W25
-W26
-W24
-W117
-XQG1
-XQG2
-XSA
-XTL
-XC32
-XC31
-XC30
-XC29
-XC23
M30-J13

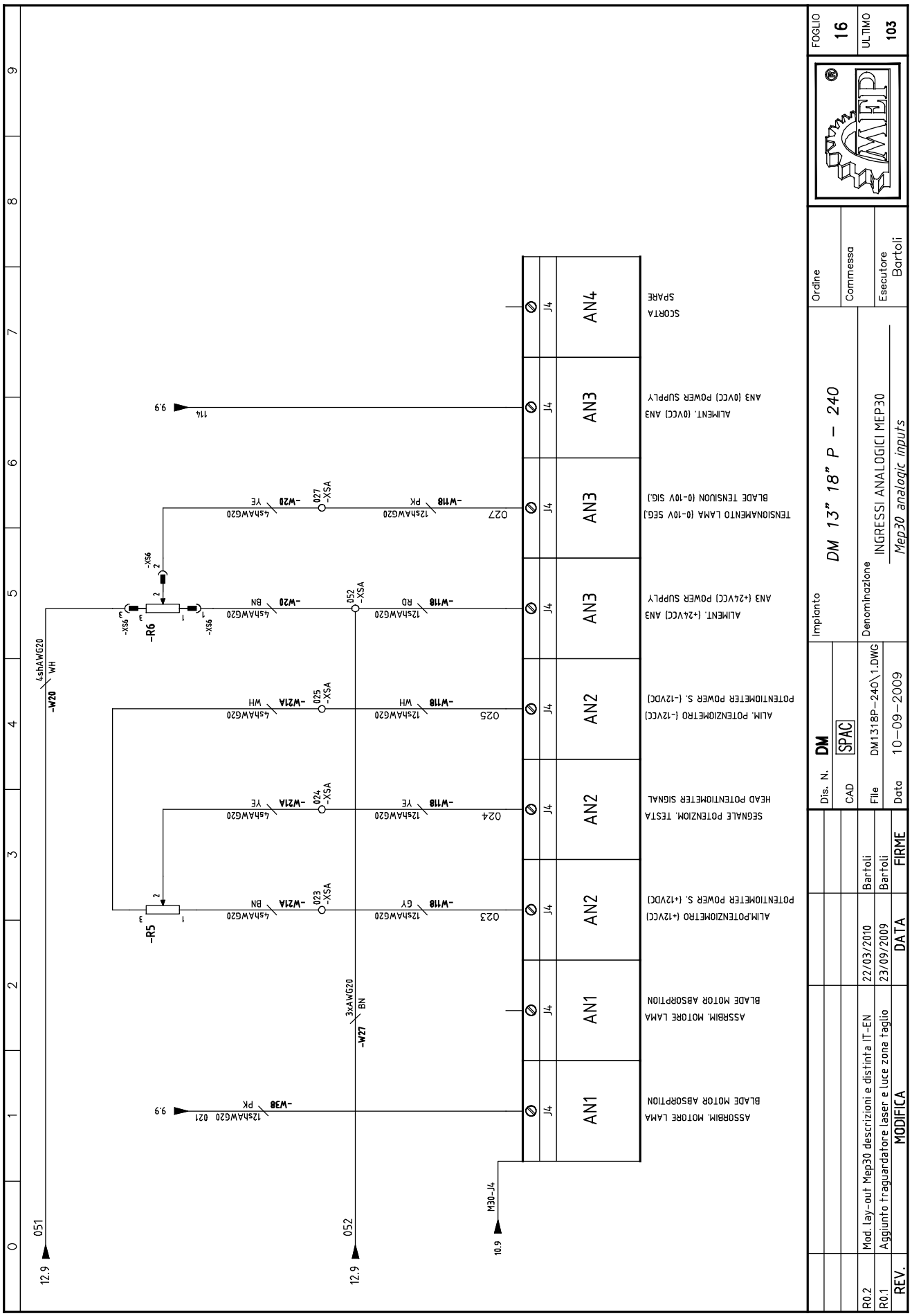
AN4
SCORTA
SPARE
AN3
ALIMENT. (0VCC) AN3
AN3 (0VCC) POWER SUPPLY
AN3
TENSIONAMENTO LAMA (0-10V SEG.)
BLADE TENSION (0-10V SIG.)
AN3
ALIMENT. (+24VCC) AN3
AN3 (+24VCC) POWER SUPPLY
AN2
ALIM. POTENZIOMETRO (-12VCC)
POTENTIOMETER POWER S. (-12VDC)
AN2
SEGNALE POTENZIOM. TESTA
HEAD POTENTIOMETER SIGNAL
AN2
ALIM.POTENZIOMETRO (+12VCC)
POTENTIOMETER POWER S. (+12VDC)
AN1
ASSRBIM. MOTORE LAMA
BLADE MOTOR ABSORPTION
AN1
ASSRBIM. MOTORE LAMA
BLADE MOTOR ABSORPTION
-W38
12SHAWG20
-W18
12SHAWG20
-W20
4SHAWG20
-W21A
4SHAWG20
-R5
-R6
-W20
4shAWG20
-W27
3xAWG20
051
052
M30-J4
Impianto
DM 13" 18" P - 240
Denominazione
INGRESSI ANALOGICI MEP30
Mep30 analogic inputs
Ordine
Commessa
Esecutore
Bartoli
FOGLIO
16
ULTIMO
103
Dis. N. DM
CAD SPAC
File DM1318P-240\1.DWG
Data 10-09-2009
R0.2 Mod. lay-out Mep30 descrizioni e distinta IT-EN 22/03/2010 Bartoli
R0.1 Aggiunto fraguardatore laser e luce zona taglio 23/09/2009 Bartoli
REV. MODIFICA DATA FIRME

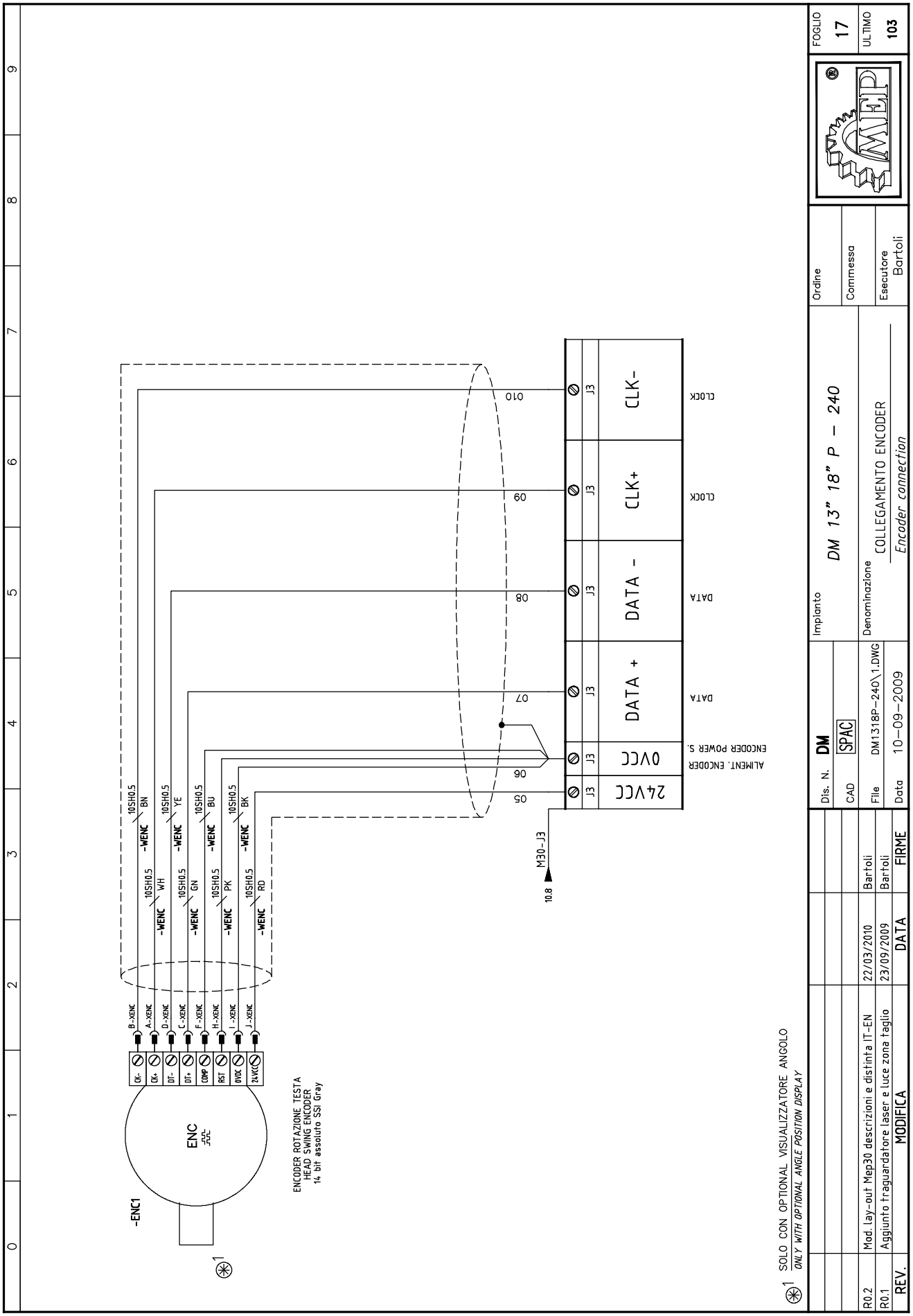
-ENC1
ENC
ENCODER ROTAZIONE TESTA
HEAD SWING ENCODER
14 bit assoluto SSI Gray
CK-
CK+
DT-
DT+
COMP
RST
0VDC
24VDC
B-XENC
A-XENC
D-XENC
C-XENC
F-XENC
H-XENC
I-XENC
J-XENC
10SH0.5
-WENC
BN
WH
YE
GN
BU
PK
BK
RD
010
09
08
07
06
05
M30-J3
10.8
J3
24VCC
0VCC
DATA +
DATA -
CLK+
CLK-
ALIMENT. ENCODER
ENCODER POWER S.
DATA
CLOCK
SOLO CON OPTIONAL VISUALIZZATORE ANGOLO
ONLY WITH OPTIONAL ANGLE POSITION DISPLAY
Dis. N. DM
CAD SPAC
File DM1318P-240\1.DWG
Data 10-09-2009
Impianto
DM 13" 18" P - 240
Denominazione
COLLEGAMENTO ENCODER
Encoder connection
Ordine
Commessa
Esecutore Bartoli
FOGLIO 17
ULTIMO 103
R0.2 Mod. lay-out Mep30 descrizioni e distinta IT-EN 22/03/2010 Bartoli
R0.1 Aggiunto traguardatore laser e luce zona taglio 23/09/2009 Bartoli
REV. MODIFICA DATA FIRME

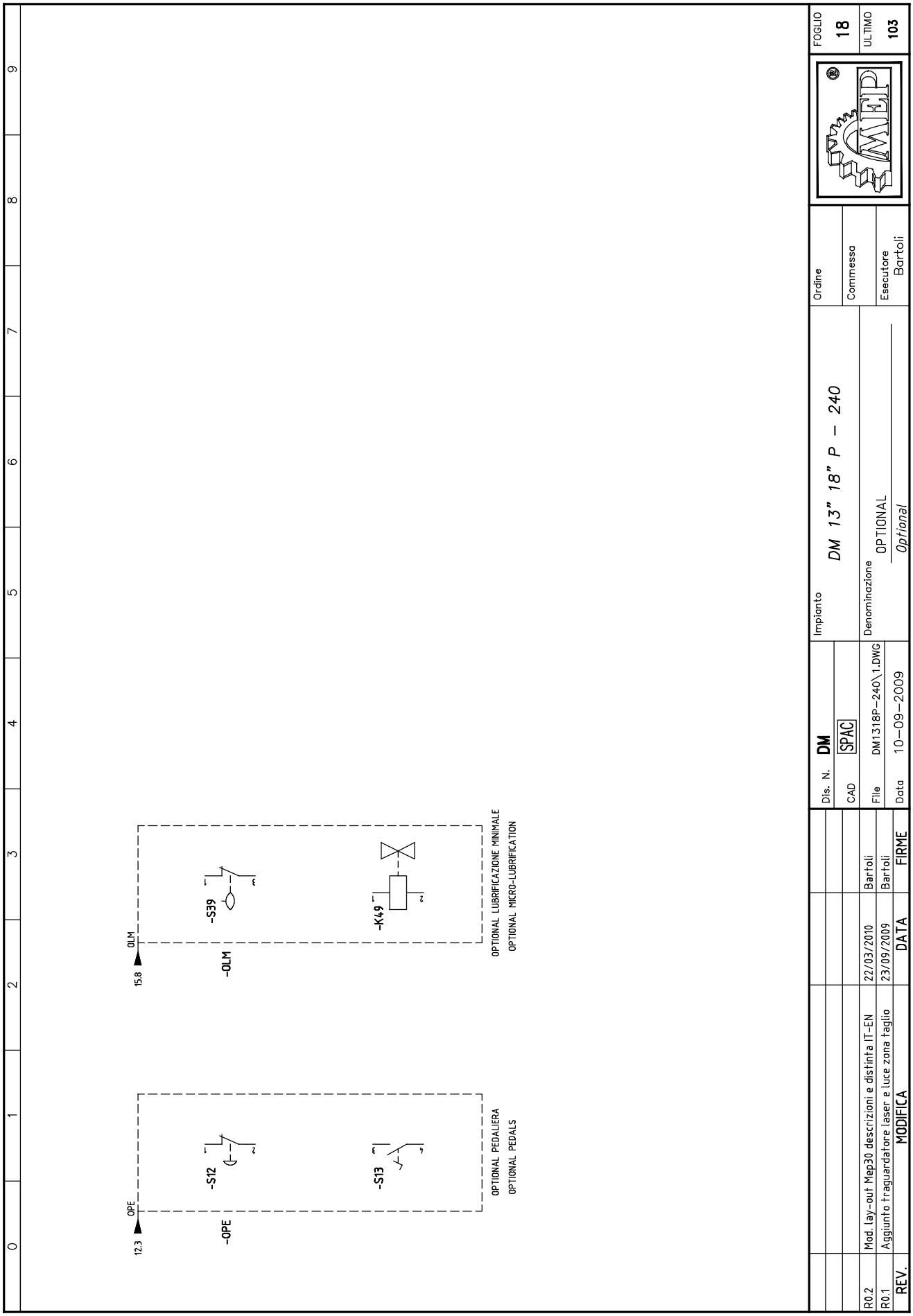
OPE
12.3
-OPE
-S12
-S13
OPTIONAL PEDALIERA
OPTIONAL PEDALS
OLM
15.8
-OLM
-S39
-K49
OPTIONAL LUBRIFICAZIONE MINIMALE
OPTIONAL MICRO-LUBRIFICATION
REV.
MODIFICA
DATA
FIRME
R0.2
Mod. lay-out Mep30 descrizioni e distinta IT-EN
22/03/2010
Bartoli
R0.1
Aggiunto traguardatore laser e luce zona taglio
23/09/2009
Bartoli
Dis. N.
DM
CAD
SPAC
File
DM1318P-240\1.DWG
Data
10-09-2009
Impianto
DM 13" 18" P - 240
Denominazione
OPTIONAL
Optional
Ordine
Commessa
Esecutore
Bartoli
FOGLIO
18
ULTIMO
103

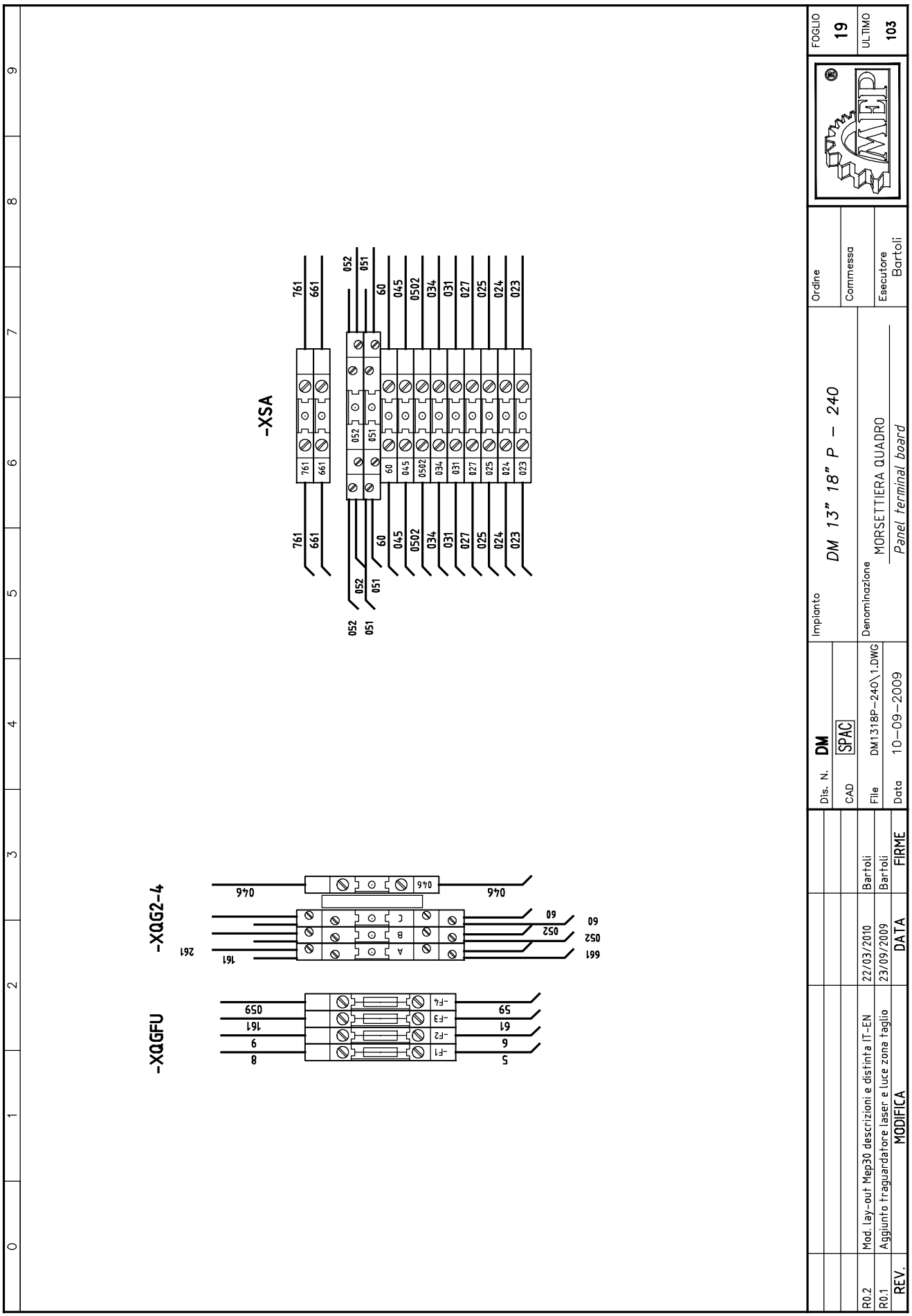
-XSA
761
661
052
051
60
045
0502
034
031
027
025
024
023
-XQG2-4
046
261
161
A
B
C
052
60
661
-XQGFU
-F1
-F2
-F3
-F4
8
9
161
059
5
6
61
59
Dis. N. DM
CAD SPAC
File DM1318P-240\1.DWG
Data 10-09-2009
Impianto
DM 13" 18" P - 240
Denominazione
MORSETTIERA QUADRO
Panel terminal board
Ordine
Commessa
Esecutore Bartoli
FOGLIO 19
ULTIMO 103
R0.2 Mod. lay-out Mep30 descrizioni e distinta IT-EN 22/03/2010 Bartoli
R0.1 Aggiunto traguardatore laser e luce zona taglio 23/09/2009 Bartoli
REV. MODIFICA DATA FIRME

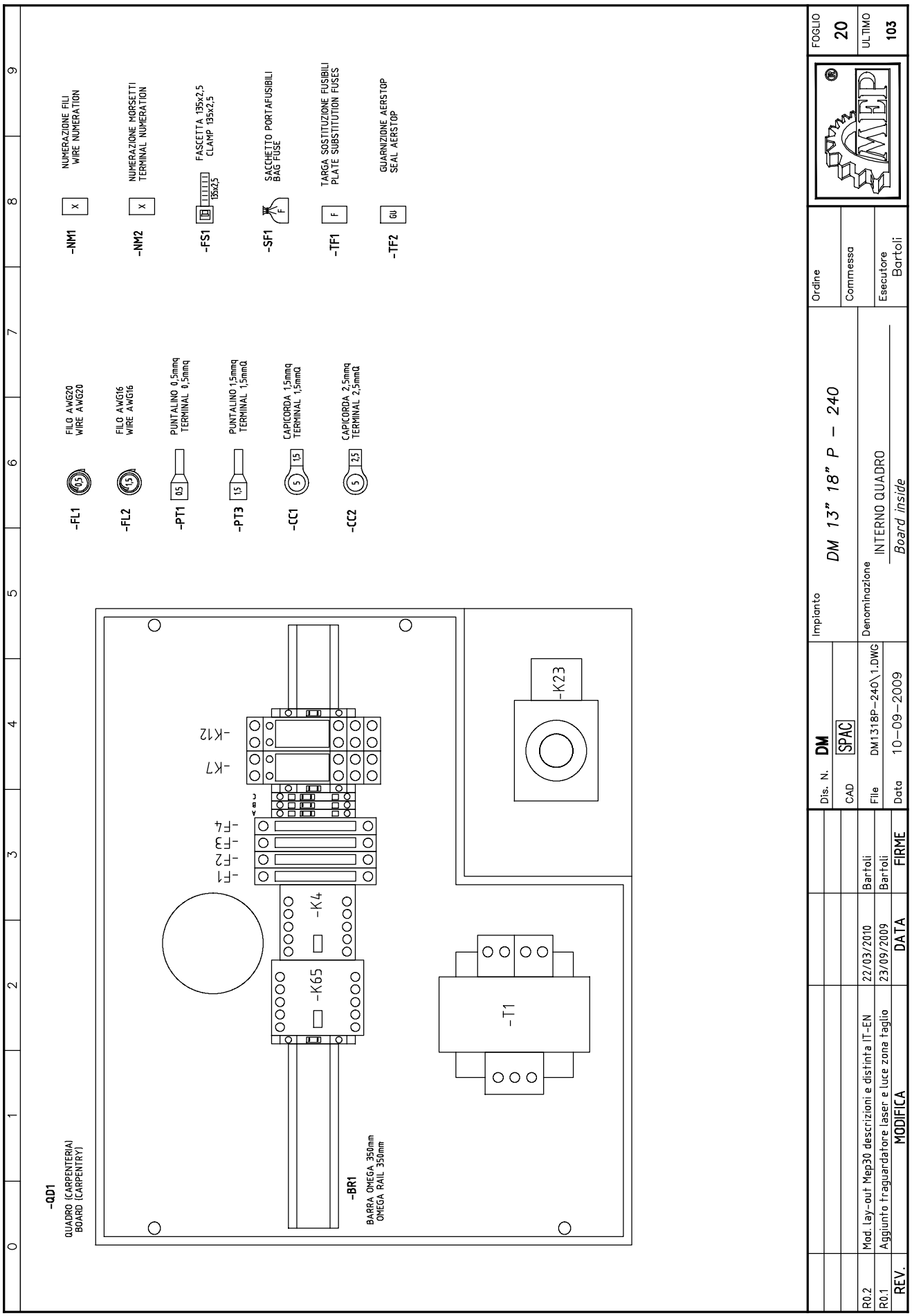
-QD1
QUADRO (CARPENTERIA)
BOARD (CARPENTRY)
-BR1
BARRA OMEGA 350mm
OMEGA RAIL 350mm
-K12
-K7
-F4
-F3
-F2
-F1
-K4
-K65
-T1
-K23
-FL1
FILO AWG20
WIRE AWG20
-FL2
FILO AWG16
WIRE AWG16
-PT1
PUNTALINO 0,5mmq
TERMINAL 0,5mmq
-PT3
PUNTALINO 1,5mmq
TERMINAL 1,5mmQ
-CC1
CAPICORDA 1,5mmq
TERMINAL 1,5mmQ
-CC2
CAPICORDA 2,5mmq
TERMINAL 2,5mmQ
-NM1
NUMERAZIONE FILI
WIRE NUMERATION
-NM2
NUMERAZIONE MORSETTI
TERMINAL NUMERATION
-FS1
FASCETTA 135x2,5
CLAMP 135x2,5
-SF1
SACCHETTO PORTAFUSIBILI
BAG FUSE
-TF1
TARGA SOSTITUZIONE FUSIBILI
PLATE SUBSTITUTION FUSES
-TF2
GUARNIZIONE AERSTOP
SEAL AERSTOP
Impianto
DM 13" 18" P – 240
Denominazione
INTERNO QUADRO
Board inside
Ordine
Commessa
Esecutore
Bartoli
FOGLIO
20
ULTIMO
103
Dis. N. DM
CAD SPAC
File DM1318P-240\1.DWG
Data 10-09-2009
R0.2 Mod. lay-out Mep30 descrizioni e distinta IT-EN 22/03/2010 Bartoli
R0.1 Aggiunto traguardatore laser e luce zona taglio 23/09/2009 Bartoli
REV. MODIFICA DATA FIRME

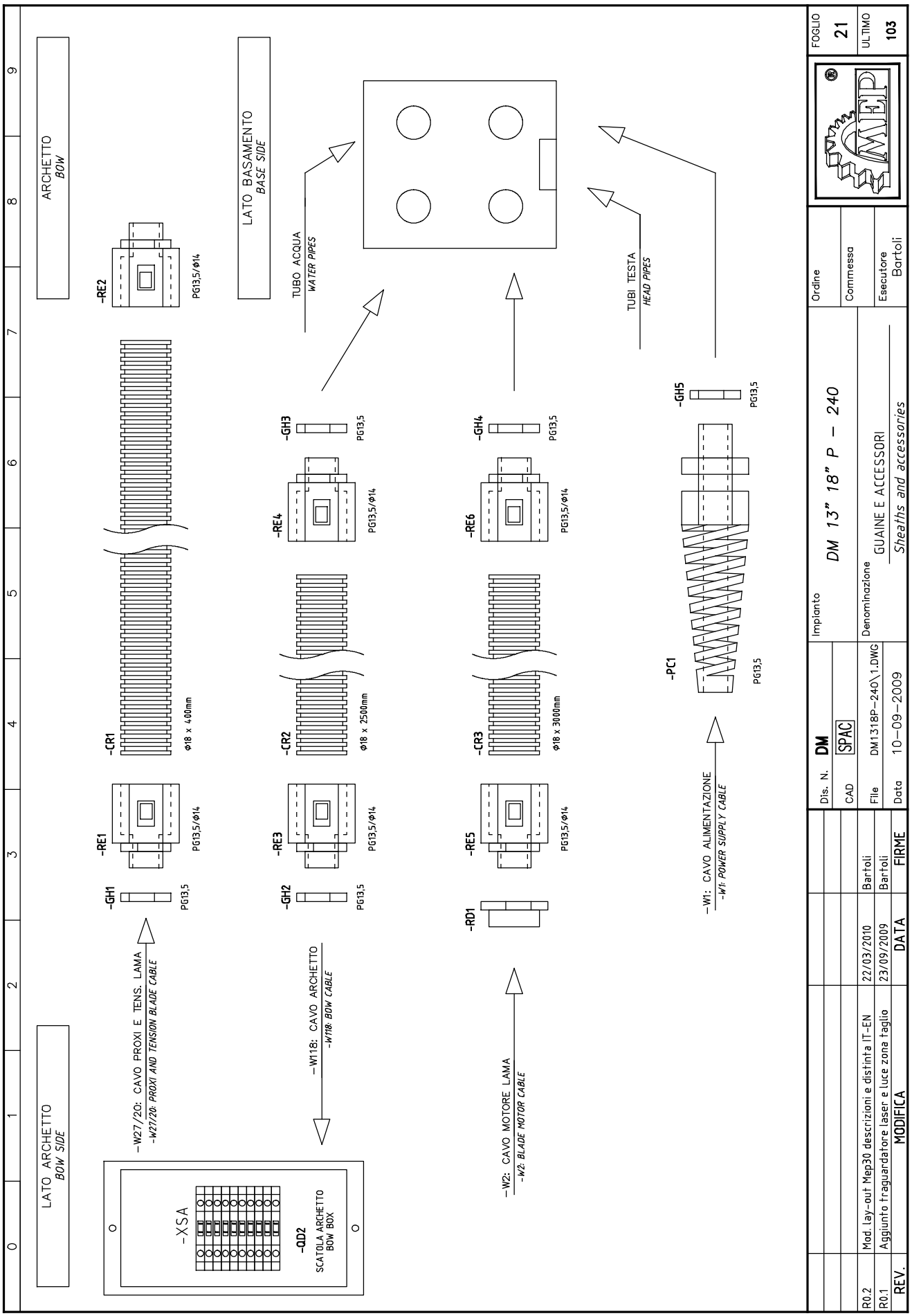
ARCHETTO
BOW
LATO BASAMENTO
BASE SIDE
TUBO ACQUA
WATER PIPES
TUBI TESTA
HEAD PIPES
-RE2
PG13,5/Ø14
-GH3
PG13,5
-GH4
PG13,5
-GH5
PG13,5
-RE4
PG13,5/Ø14
-RE6
PG13,5/Ø14
-CR1
Ø18 x 400mm
-CR2
Ø18 x 2500mm
-CR3
Ø18 x 3000mm
-PC1
PG13,5
-RE1
PG13,5/Ø14
-RE3
PG13,5/Ø14
-RE5
PG13,5/Ø14
-GH1
PG13,5
-GH2
PG13,5
-RD1
-W1: CAVO ALIMENTAZIONE
-W1: POWER SUPPLY CABLE
-W27/20: CAVO PROXI E TENS. LAMA
-W27/20: PROXI AND TENSION BLADE CABLE
-W118: CAVO ARCHETTO
-W118: BOW CABLE
-W2: CAVO MOTORE LAMA
-W2: BLADE MOTOR CABLE
LATO ARCHETTO
BOW SIDE
-XSA
-QD2
SCATOLA ARCHETTO
BOW BOX
FOGLIO
21
ULTIMO
103
Ordine
Commessa
Esecutore
Bartoli
Impianto
DM 13" 18" P - 240
Denominazione
GUAINE E ACCESSORI
Sheaths and accessories
Dis. N.
DM
CAD
SPAC
File
DM1318P-240\1.DWG
Data
10-09-2009
REV.
R0.2
R0.1
MODIFICA
Mod. lay-out Mep30 descrizioni e distinta IT-EN
Aggiunto traguardatore laser e luce zona taglio
DATA
22/03/2010
23/09/2009
FIRME
Bartoli
Bartoli

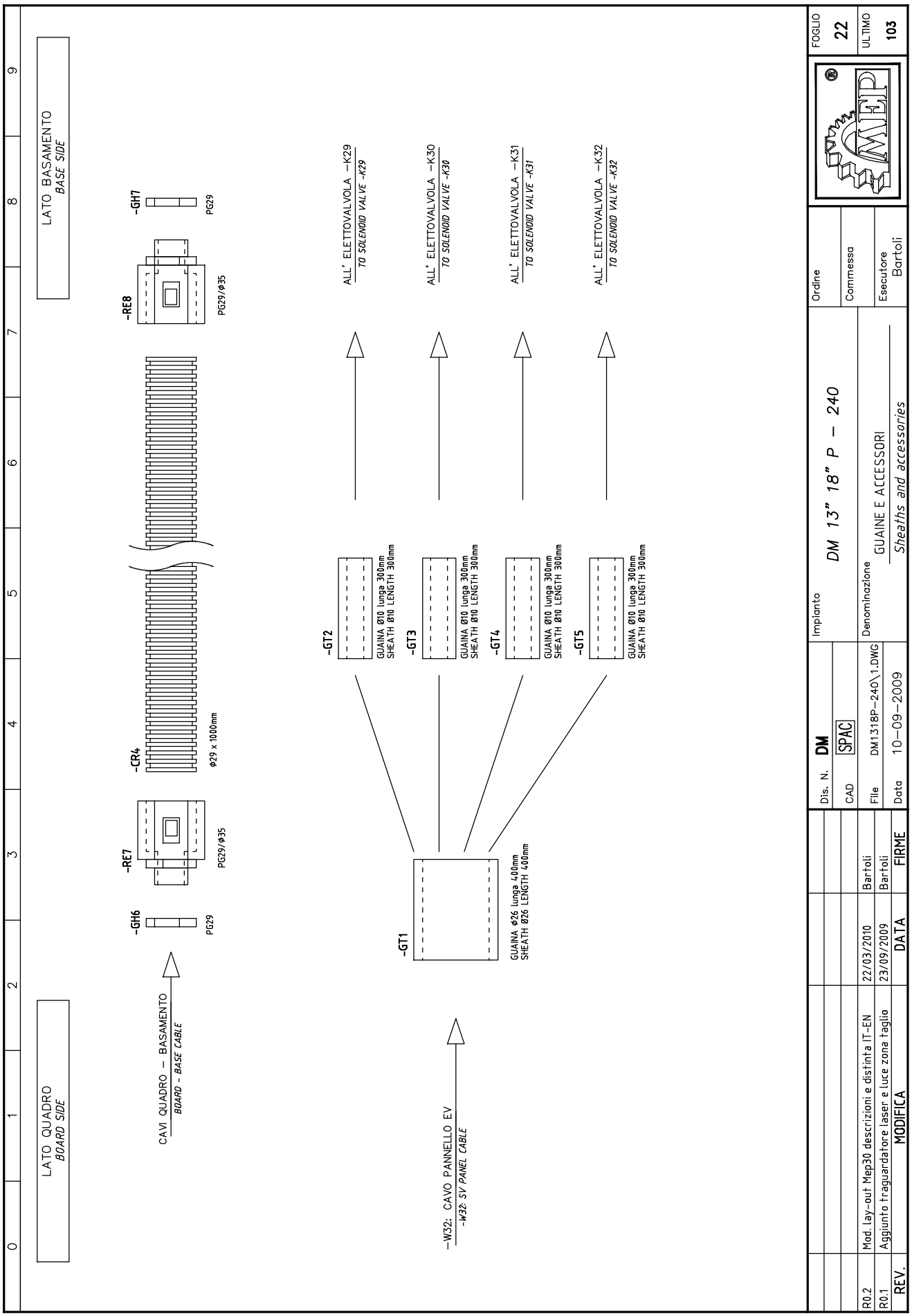
LATO QUADRO
BOARD SIDE
LATO BASAMENTO
BASE SIDE
CAVI QUADRO – BASAMENTO
BOARD - BASE CABLE
-GH6
PG29
-RE7
PG29/Ø35
-CR4
Ø29 x 1000mm
-RE8
PG29/Ø35
-GH7
PG29
-W32: CAVO PANNELLO EV
-W32: SV PANEL CABLE
-GT1
GUAINA Ø26 lunga 400mm
SHEATH Ø26 LENGTH 400mm
-GT2
GUAINA Ø10 lunga 300mm
SHEATH Ø10 LENGTH 300mm
ALL' ELETTOVALVOLA -K29
TO SOLENOID VALVE -K29
-GT3
GUAINA Ø10 lunga 300mm
SHEATH Ø10 LENGTH 300mm
ALL' ELETTOVALVOLA -K30
TO SOLENOID VALVE -K30
-GT4
GUAINA Ø10 lunga 300mm
SHEATH Ø10 LENGTH 300mm
ALL' ELETTOVALVOLA -K31
TO SOLENOID VALVE -K31
-GT5
GUAINA Ø10 lunga 300mm
SHEATH Ø10 LENGTH 300mm
ALL' ELETTOVALVOLA -K32
TO SOLENOID VALVE -K32
Dis. N. DM
CAD SPAC
File DM1318P-240\1.DWG
Data 10-09-2009
Impianto
DM 13" 18" P – 240
Denominazione
GUAINE E ACCESSORI
Sheaths and accessories
Ordine
Commessa
Esecutore Bartoli
FOGLIO 22
ULTIMO 103
R0.2 Mod. lay-out Mep30 descrizioni e distinta IT-EN 22/03/2010 Bartoli
R0.1 Aggiunto traguardatore laser e luce zona taglio 23/09/2009 Bartoli
REV. MODIFICA DATA FIRME

CAVI ESTERNI \ EXTERNAL CABLES

QUADRO \ BOARD										DESTINAZIONE \ LOCATION			
QUADRO BOARD	FOGLIO SHEET	NR. MORSETTO TERMINAL NO.	NR. FILO CONDUCTOR NO.	ID SUL CAVO ID IN CABLE	CAVO CABLE	LUNGHEZZA LENGHT [mt]	DISTURBO NOISE LEVEL	ID SUL CAVO ID IN CABLE	NR. FILO CONDUCTOR NO.	NR. MORSETTO TERMINAL NO.	FOGLIO SHEET	QUADRO BOARD
=QgCv -AL	4/1	L1 ○	L1	BN	-W1 022.0130 4GAWG16	4,5 MT		BN	L1	5	4/3	=QgCv -Q0
=QgCv -AL	4/1	L2 ○	L2	BK	Cavo alimentazione / Power supply cable			BK	L2	3	4/3	=QgCv -Q0
=QgCv -AL	4/1	L3 ○	L3	GY				GY	L3	1	4/3	=QgCv -Q0
=QgCv -AL	4/2	PE ○	PE	GNYE				GNYE	PE	⏚ 1_2	4/2	=QgCv -XQGPE
=SaCv -XSA	12/2	031 ○	031	BN	-W118 022.0170 12shAWG20	7.00Mt		BN	031	J5	12/2	C0
=BmCv -XSA	16/3	023 ○	023	GY	Cavo scatola archetto / Bow box cable			GY	023	J4	16/3	AN2
=SaCv -XSA	12/1	051 ○	051	BU				BU	051	J5	12/1	0VCC
=BmCv -XSA	12/4	762 ○	034	GN				GN	034	J5	12/4	C3
=BmCv -XSA	16/5	052 ○	052	RD				RD	052	J4	16/5	AN3
=BmCv -XSA	16/3	024 ○	024	YE				YE	024	J4	16/3	AN2
=BmCv -XSA	16/4	025 ○	025	WH				WH	025	J4	16/4	AN2
=BmCv -XSA	16/6	027 ○	027	PK				PK	027	J4	16/6	AN3
=BmCv -XSA	8/1	761 ○	761	BK				BK	761	A1	8/1	=QgCv -K7
				VT				VT				
				RD-BU				RD-BU				
=QgCv -XQG2	7/3	A ○	661	GY-PK				GY-PK	661	○ 661	8/1	=BmCv -XSA
=QgCv -U1	**5/2**	**U**	**024**	BK	-W2 022.0130 4GAWG16	5.00 MT		BK	**024**	**U**	**5/1**	**=BmMep -M1**
=QgCv -U1	**5/2**	**V**	**026**	BN	Cavo motore lama / Blade motor cable			BN	**026**	**V**	**5/1**	**=BmMep -M1**
=QgCv -U1	**5/2**	**W**	**028**	GY				GY	**028**	**W**	**5/1**	**=BmMep -M1**
=QgCv -XQGPE	4/2	1_3 ⏚	PE	GNYE				GNYE	**PE**	**PE**	**5/2**	**=BmMep -M1**
=QgCv -K4	**5/5**	**2**	**015**	BN	-W3 022.0225 4GAWG18	5.00 MT		BN	**015**	**U**	**5/5**	**=BmMep -M2**
=QgCv -K4	**5/5**	**4**	**016**	BK	Cavo pompa acqua / Water pump cable			BK	**016**	**V**	**5/5**	**=BmMep -M2**
=QgCv -K4	**5/5**	**6**	**017**	GY				GY	**017**	**W**	**5/5**	**=BmMep -M2**
=QgCv -XQGPE	4/2	1_5 ⏚	PE	GNYE				GNYE	**PE**	**PE**	**5/6**	**=BmMep -M2**
=BmCv -XSA	**15/3**	**0502**	**0502**	BN	-W117 022.0178 4ShAWG18	7.00 MT		BN	**0502**	**J13**	**15/3**	**CF**
=BmCv -XSA	**15/3**	**60**	**60**	GN	Cavo scatola archetto / Bow box cable			GN	**60**	**C**	**8/8**	**=QgCv -XQG4**
=BmCv -XSA	**15/3**	**045**	**045**	YE				YE	**045**	**J13**	**15/3**	**C8**
				WH				WH				

REV.	MODIFICA	DATA	FIRME
R0.2	Mod. lay-out Mep30 descrizioni e distinta IT-EN	22/03/2010	Bartoli
R0.1	Aggiunto traguardatore laser e luce zona taglio	23/09/2009	Bartoli

Dis. N.	DM
CAD	SPAC
File	DM1318P-240\1.DWG
Data	10-09-2009
Impianto	DM 13" 18" P - 240
Denominazione	RIASSUNTIVO CAVI / Cable summary
Ordine	
Commessa	
Esecutore	Bartoli
FOGLIO	23
ULTIMO	103

CAVI ESTERNI \ EXTERNAL CABLES

QUADRO \ BOARD									DESTINAZIONE \ LOCATION			
QUADRO BOARD	FOGLIO SHEET	NR. MORSETTO TERMINAL NO.	NR. FILO CONDUCTOR NO.	ID SUL CAVO ID IN CABLE	CAVO CABLE	LUNGHEZZA LENGHT [mt]	DISTURBO NOISE LEVEL	ID SUL CAVO ID IN CABLE	NR. FILO CONDUCTOR NO.	NR. MORSETTO TERMINAL NO.	FOGLIO SHEET	QUADRO BOARD
C4	15/0	J13	041	BN	-W32 022.0170 12shAWG20	4,50MT		BN	041		15/0	=BmCv
	8/3		361	GY	Cavo pannello EV e optional / S.v. panel and optional cable			GY	361	21	8/5	=QgCv -K7
=QgCv -XQG4	8/8	C ○	60	BU				BU	60		15/0	=BmCv
C6	15/2	J13	043	GN				GN	043		15/2	=BmCv
	12/3		052	RD				RD	052	○ 052	12/1	=BmCv -XQG2
C7	15/3	J13	044	YE				YE	044		15/3	=BmCv
C5	15/1	J14	042	WH				WH	042		15/1	=BmCv
CD	15/7	J13	050	PK				PK	050		15/7	
C5	12/6	J5	036	BK				BK	036		12/6	
	8/3		0361	VT				VT	0361	2	8/3	=QgCv -S4
				RD-BU				RD-BU				
C2	12/3	J5	033	GY-PK				GY-PK	033		12/3	
=QgCv	9/3		038	BN	-W38 022.0170 12shAWG20	4,5 MT		BN	038	J5	12/7	C7
=QgCv	9/3	B2	060	GY	Cavo comandi inverter / Inverter command cable			GY	060	J12	14/2	RUN-I
=QgCv	9/3	B4	061	BU				BU	061	J12	14/2	RUN-I
=QgCv -R3	9/6	3	116	GN				GN	116	10V	9/3	=QgCv
=QgCv	9/4		052	RD				RD	052	○ 052	12/1	=BmCv -XQG2
=QgCv -R3	9/7	1	114	YE				YE	114	0V	9/3	=QgCv
=QgCv -R3	9/7	2	115	WH				WH	115	A2	9/3	=QgCv
=QgCv	9/3	B1	021	PK				PK	021	J4	16/1	AN1
				BK				BK				
				VT				VT				
				RD-BU				RD-BU				
				GY-PK				GY-PK				
=QgCv -XQG2	15/4	046 ○	046	BN	-W39 022.0139 2xAWG20	1,5Mt		BN	046		15/4	=QG
=QgCv -XQG4	8/8	C ○	60	BU	Cavo coll. EV by-pass / S.v. by-pass cable			BU	60		15/4	=QG
=QgCv -K65	5/7	2	018	BN	-W4 022.0225 4GAWG18	5.00 Mt		BN	018	U	5/7	=BmMep -M3
=QgCv -K65	5/7	4	019	BK	Cavo centralina idraulica / Hydraulic oil unit cable			BK	019	V	5/7	=BmMep -M3
=QgCv -K65	5/7	6	020	GY				GY	020	W	5/7	=BmMep -M3
=QgCv -XQGPE	4/2	1_6 ⏍	PE	GNYE				GNYE	PE	PE	5/8	=BmMep -M3

REV.	MODIFICA	DATA	FIRME
R0.2	Mod. lay-out Mep30 descrizioni e distinta IT-EN	22/03/2010	Bartoli
R0.1	Aggiunto traguardatore laser e luce zona taglio	23/09/2009	Bartoli

Dis. N. DM
CAD SPAC
File DM1318P-240\1.DWG
Data 10-09-2009

Impianto: DM 13" 18" P - 240
Denominazione: RIASSUNTIVO CAVI
Cable summary

Ordine
Commessa
Esecutore: Bartoli

FOGLIO 24
ULTIMO 103

CAVI ESTERNI \ EXTERNAL CABLES

QUADRO \ BOARD										DESTINAZIONE \ LOCATION			
QUADRO BOARD	FOGLIO SHEET	NR. MORSETTO TERMINAL NO.	NR. FILO CONDUCTOR NO.	ID SUL CAVO ID IN CABLE	CAVO CABLE	LUNGHEZZA LENGHT [mt]	DISTURBO NOISE LEVEL	ID SUL CAVO ID IN CABLE	NR. FILO CONDUCTOR NO.	NR. MORSETTO TERMINAL NO.	FOGLIO SHEET	QUADRO BOARD
=QgCv -XENC	17/2	J	05	RD	-WENC 022.0409 10SH0.5			RD	05	J3	17/3	24VCC
=QgCv -XENC	17/2	I	06	BK	Cavo encoder / Encoder cable			BK	06	J3	17/4	0VCC
=QgCv -XENC	17/2	H	68	PK				PK	68	J3	17/4	0VCC
=QgCv -XENC	17/2	F	66	BU				BU	66	J3	17/4	0VCC
=QgCv -XENC	17/2	D	08	YE				YE	08	J3	17/5	DATA -
=QgCv -XENC	17/2	C	07	GN				GN	07	J3	17/4	DATA +
=QgCv -XENC	17/2	B	010	BN				BN	010	J3	17/7	CLK-
=QgCv -XENC	17/2	A	09	WH				WH	09	J3	17/6	CLK+
=BmCv -XS6	16/5	1	023	BN	-W20 022.0136 4shAWG20	1.00Mt		BN	023	052	16/5	=BmCv -XSA
=BmCv -XS6	16/5	2	027	YE	Cavo tensionatore / Tensioner cable			YE	027	027	16/6	=BmCv -XSA
=BmCv -XS6	16/5	3	051	WH				WH	051	051	12/1	=SaCv -XSA
				GN				GN				
=BmCv -XS5	16/3	1	023	BN	-W21A 022.0136 4shAWG20	5.00Mt		BN	023	023	16/3	=BmCv -XSA
=BmCv -XS5	16/3	2	024	YE	Cavo potenziometro testa / Head potentiometer cable			YE	024	024	16/3	=BmCv -XSA
=BmCv -XS5	16/3	3	025	WH				WH	025	025	16/4	=BmCv -XSA
				GN				GN				
=BmCv -XSA	16/5	052	052	BN	-W27 022.0376 3x0.5	5.00 Mt		BN	052	1	12/1	=BmMep -XS0
=SaCv -XSA	12/2	031	031	BK	Cavo proximity / Proximity cable			BK	031	4	12/2	=BmMep -XS0
=SaCv -XSA	12/1	051	051	BU				BU	051	3	12/1	=BmMep -XS0
=BmCv -XSA	8/1	661	661	BN	-W55 022.0139 2xAWG20	1.50Mt		BN	661	21	8/1	=BmCv -S1
=BmCv -XSA	8/1	761	761	BU	Cavo fc carter lama / L.s. blade protection cable			BU	761	22	8/1	=BmCv -S1
=BmCv -XSA	15/9	0502	0502	BN	-W24 022.0139 2xAWG20	1.50Mt		BN	0502	/	15/9	=BmMep -HL10
=BmCv -XSA	15/9	60	60	BU	Cavo lampada zona taglio / Ligth cut zone cable			BU	60	/	15/9	=BmMep -HL10
=BmCv -XSA	15/3	045	045	BN	-W25 022.0139 2xAWG20	1.50Mt		BN	045	24VAC	15/3	=QgCv -T10
=BmCv -XSA	15/3	60	60	BU	Cavo alimentatore laser / Laser sight power supply cable			BU	60	0	15/3	=QgCv -T10
=QgCv -T10	15/3	5VCC	/	BN	-W26 022.0139 2xAWG20	1.50Mt		BN	/	1	15/3	=BmMEP -XTL
=QgCv -T10	15/3	0	/	BU	Cavo alimentatore laser / Laser sight power supply cable			BU	/	3	15/3	=BmMEP -XTL

REV.	MODIFICA	DATA	FIRME
R0.2	Mod. lay-out Mep30 descrizioni e distinta IT-EN	22/03/2010	Bartoli
R0.1	Aggiunto traguardatore laser e luce zona taglio	23/09/2009	Bartoli

Dis. N. DM
CAD SPAC
File DM1318P-240\1.DWG
Data 10-09-2009

Impianto: DM 13" 18" P - 240
Denominazione: RIASSUNTIVO CAVI
Cable summary

Ordine
Commessa
Esecutore: Bartoli

FOGLIO 25
ULTIMO 103

NOME/ITEM	TIPO/TYPE	DESCRIZIONE/DESCRIPTION	QUADRO/BOARD	FG/SH	Q.TA/Q.TY
'-CR1	'022.2602	Guaina POLIFLEX NW 14-1200143 (corrugato diam. 18) - POLIFLEX COVERING NW 14-1200143	'=BmCv	21	0.40
'-CR2	'022.2602	Guaina POLIFLEX NW 14-1200143 (corrugato diam. 18) - POLIFLEX COVERING NW 14-1200143	'=BmCv	21	2.50
'-CR3	'022.2602	Guaina POLIFLEX NW 14-1200143 (corrugato diam. 18) - POLIFLEX COVERING NW 14-1200143	'=BmCv	21	3.00
'-CR4	'022.0197	Guaina POLIFLEX NW 29-3800296 (corrugato diam. 35) - SHEATH NW 29-1200291	'=BmCv	22	1.00
'-GH1	'022.0244	Dado grigio PG13,5 - LOCK NUT 3217B GREY PG 13,5	'=BmCv	21	1
'-GH2	'022.0244	Dado grigio PG13,5 - LOCK NUT 3217B GREY PG 13,5	'=BmCv	21	1
'-GH3	'022.0244	Dado grigio PG13,5 - LOCK NUT 3217B GREY PG 13,5	'=BmCv	21	1
'-GH4	'022.0244	Dado grigio PG13,5 - LOCK NUT 3217B GREY PG 13,5	'=BmCv	21	1
'-GH5	'022.0244	Dado grigio PG13,5 - LOCK NUT 3217B GREY PG 13,5	'=BmCv	21	1
'-GH6	'022.0247	Dado poliammide PG29 - POLYAMIDE HUMMEL NUT 1.262.2900.11	'=BmCv	22	1
'-GH7	'022.0247	Dado poliammide PG29 - POLYAMIDE HUMMEL NUT 1.262.2900.11	'=BmCv	22	1
'-GT1	'022.0180	Guaina termoretraibile 26mm - COVERING MM 26	'=BmCv	22	0.40
'-GT2	'022.0181	Guaina termoretraibile 10mm - COVERING MM 10	'=BmCv	22	0.30
'-GT3	'022.0181	Guaina termoretraibile 10mm - COVERING MM 10	'=BmCv	22	0.30
'-GT4	'022.0181	Guaina termoretraibile 10mm - COVERING MM 10	'=BmCv	22	0.30
'-GT5	'022.0181	Guaina termoretraibile 10mm - COVERING MM 10	'=BmCv	22	0.30
'-PC1	'022.0234	Pressacordone 3246 nero PG13,5 - ORD PRESSER 3246 BLACK PG13.5	'=BmCv	21	1
'-RD1	'022.0349	Riduzione M/F M20/PG13,5 - ADAPTER M20-FEMM.PG 13,5 X FOR KEY BACK STOP	'=BmCv	21	1
'-RE1	'022.0211	Raccordo rapido dritto SEM PG13,5/Ø19 - RAPID JOINT SEM PG 13,5	'=BmCv	21	1
'-RE2	'022.0211	Raccordo rapido dritto SEM PG13,5/Ø19 - RAPID JOINT SEM PG 13,5	'=BmCv	21	1
'-RE3	'022.0211	Raccordo rapido dritto SEM PG13,5/Ø19 - RAPID JOINT SEM PG 13,5	'=BmCv	21	1
'-RE4	'022.0211	Raccordo rapido dritto SEM PG13,5/Ø19 - RAPID JOINT SEM PG 13,5	'=BmCv	21	1
'-RE5	'022.0211	Raccordo rapido dritto SEM PG13,5/Ø19 - RAPID JOINT SEM PG 13,5	'=BmCv	21	1
'-RE6	'022.0211	Raccordo rapido dritto SEM PG13,5/Ø19 - RAPID JOINT SEM PG 13,5	'=BmCv	21	1
'-RE7	'022.0209	Raccordo rapido dritto SEM PG29/Ø35 - RAPID JOINT SEM 29	'=BmCv	22	1
'-RE8	'022.0209	Raccordo rapido dritto SEM PG29/Ø35 - RAPID JOINT SEM 29	'=BmCv	22	1
'-S1	'022.0037	Finecorsa di sicurezza con chiave 1NO + 1NC - FR 690 SH SAFETY SWITCH	'=BmCv	8	1
'-XC23	'022.0412	Connettore per EV con led per EV. AC - CONNECTOR F.REGENERATOR VALVE COIL	'=BmCv	15	1
'-XC29	'022.0378	Connettore per EV con ponte raddrizzatore e led - CONNECTOR F.REGENERATOR VALVE COIL	'=BmCv	15	1
'-XC30	'022.0378	Connettore per EV con ponte raddrizzatore e led - CONNECTOR F.REGENERATOR VALVE COIL	'=BmCv	15	1
'-XC31	'022.0378	Connettore per EV con ponte raddrizzatore e led - CONNECTOR F.REGENERATOR VALVE COIL	'=BmCv	15	1
'-XC32	'022.0378	Connettore per EV con ponte raddrizzatore e led - CONNECTOR F.REGENERATOR VALVE COIL	'=BmCv	15	1
'-XS6	'022.0378	Connettore AC 3 poli per valvola DC - CONNECTOR F.REGENERATOR VALVE COIL	'=BmCv	16	1
'-OLM	'090.1601	Gruppo lubrificazione munimale SHARK - SPRAY MIST SYSTEM SHARK	'=BmLmCv	18	1
'-HL10	'022.0346	Lampada 35W 24V Ø30 3000K vetro alogena - HALOGEN LAMP 35W 24V Ø30 3000K GLASS	'=BmMep	15	1
'-M1	'019.3623	KW1,5 M90L4P.B14 V.240-415 SH 452 - KW 1,5 M90L4P.B14 V.240-415.60 UL-CSA CERTIFICATE	'=BmMep	5	1

REV.	MODIFICA	DATA	FIRME
R0.2	Mod. lay-out Mep30 descrizioni e distinta IT-EN	22/03/2010	Bartoli
R0.1	Aggiunto traguardatore laser e luce zona taglio	23/09/2009	Bartoli

Dis. N. DM
CAD SPAC
File DM1318P-240\1.DWG
Data 10-09-2009

Impianto: DM 13" 18" P - 240
Denominazione: DISTINTA MATERIALI
Material list

Ordine
Commessa
Esecutore: Bartoli

FOGLIO 26
ULTIMO 103

0	1	2	3	4	5	6	7	8	9

NOME/ITEM	TIPO/TYPE	DESCRIZIONE/DESCRIPTION	QUADRO/BOARD	FG/SH	Q.TA/Q.TY
'-M2	'028.0236	Elettropompa SAP PA150/120 trifase KW 0.20 3420Rpm 50/60Hz - 3-PH ELECTROPUMP PA150/120	'=BmMep	5	1
'-M3	'019.4006	Motore da 0,5Hp C71 B14 V230-415-50Hz / V240-480-60Hz - MOTOR HYDR. POWER PACK HP 0,5 C71IR	'=BmMep	5	1
'-R5	'022.0046	Potenziometro da 2K2 per testa - 6639S-001-202 POTENTIOMETER SH SX	'=BmMep	16	1
'-R6	'022.2152	Tensionatore elettronico Deltateck TR-S-A/3,5T 4V- 2800Kg - ELECTRONIC TENSIONER TRSA/3T.00	'=BmMep	16	1
'-TL1	'022.0513	Traguardatore laser - LASER'EMTTER 4/6V. X SH 500	'=BmMep	15	1
'-S0	'022.0523	Sensore di prossimita NPN per CNC FE - PROXIMITY NPN CNCFE	'=BmMep	12	1
'-XS0	'022.0376	Connettore 3 poli per prossimity F303N5000 - CONNECTOR F303N5000 FOR PROXIMITY	'=BmMep	12	1
'-OPE	'090.0672	Comando supplementare a pedaliera - FOOT-PEDAL DEVICE N.S. TI-CB-SHAX/I-CNC	'=BmPeMep	18	1
'-ENC1	'022.1316	Encoder assoluto 14 bit AS5814/GA-6-ER LIKA - ENCODER SSI AS5814/GA-6-ER	'=BmViAn	17	1
'-K23	V.d.Id.	Vedi distinta idraulica - SEE HYDRAULIC LIST	'=CeIdCv	15	1
'-K29	V.d.Id.	Vedi distinta idraulica - SEE HYDRAULIC LIST	'=CeIdCv	15	1
'-K30	V.d.Id.	Vedi distinta idraulica - SEE HYDRAULIC LIST	'=CeIdCv	15	1
'-K31	V.d.Id.	Vedi distinta idraulica - SEE HYDRAULIC LIST	'=CeIdCv	15	1
'-K32	V.d.Id.	Vedi distinta idraulica - SEE HYDRAULIC LIST	'=CeIdCv	15	1
'-BR1	'022.0900	Barra omega - OMEGA 3 GUIDE	'=QgCv	20	0.40
'-CC1	'022.0304	Terminale a occhiello Ø5 da 1,5mmq (Rosso) - WIRE TERMINAL CONNECT.A 5/P-B15/P	'=QgCv	20	14
'-CC2	'022.0296	Terminale a occhiello Ø5 da 2,5mmq (Blu) - WIRE TERMINAL CONNEC.S 2,5 MMQ GROMMET F 5 BF-M5	'=QgCv	20	1
'-FL1	'022.0171	Cordicella unipolare 1 X 0,5 - UNI-POLAR STRING 1X0,50	'=QgCv	20	16.70
'-FL2	'022.0172	Cordicella unipolare 1x1,50 - UNI-POLAR STRING 1X1,50	'=QgCv	20	56.00
'-FS1	'019.5353	Fascetta in plastica 135x2,5 - LEGRAND CLAMP ART.32031 140X3,5	'=QgCv	20	50
'-K0	'022.0553	Sganciatore U-PKZO V.240.60 - RELEASER U-PKZO V.240.60	'=QgCv	4	1
'-K4	'022.3004	Minicontattore 9 AMP. - DILEM-10 (24V.50.60 HZ) cod. 21417 - MINI CONTACTOR 9 AMP	'=QgCv	15	1
'-K7	022.0994 + 022.2391	Rele 24VAC - 2 contatti scambio + zoccolo - Rele 24VAC - 2 CHANGE CONTACTS + SOCKET	'=QgCv	8	1
'-K12	022.0994 + 022.2391	Rele 24VAC - 2 contatti scambio + zoccolo - Rele 24VAC - 2 CHANGE CONTACTS + SOCKET	'=QgCv	8	1
'-K65	'022.3004	Minicontattore 9 AMP. - DILEM-10 (24V.50.60 HZ) cod. 21417 - MINI CONTACTOR 9 AMP	'=QgCv	15	1
'-NM1	'022.0290	Etichetta segnafilo - CABLE MARKER AND WIRES	'=QgCv	20	496
'-NM2	'022.0290	Etichetta per morsettiera - CABLE MARKER AND WIRES	'=QgCv	20	20
'-PT1	'022.0311	Terminale a puntale da 0,5mmq (Bianco) - CONNECTION TERMINAL DZ5CE005	'=QgCv	20	134
'-PT3	'022.0312	Terminale a puntale da 1,5mmq (Nero) - CONNECTION TERMINAL DZ5CE015	'=QgCv	20	70
'-Q0	'022.0124	Custodia isolante E-PKZO-GR con manopola rossa - HOUSING W.RED HANDLE	'=QgCv	4	1
'-Q0	'022.0125	Blocco luchettabile SBV-PKZO-E cod.35127 - LOCKABLE BLOCK	'=QgCv	4	1
'-Q0	'022.1288	Interuttore PKZM0-16 (termica) cod. 46938 Moeller - SWITCH PKZM0-16 (THERMAL)	'=QgCv	4	1
'-QD1	'016.0714	Quadro comandi SH SXI orizzontale - CONTROL PANEL SH SXI N.S.	'=QgCv	20	1
'-R3	'022.0045	Potenziometro 10K - POTENTIOMETER 10 K.	'=QgCv	9	1
'-R3	'034.1166	Manopola per comando potenziometro 22mm - KNOB 22 MM F. POTENTIOMETER	'=QgCv	9	1
'-S3	'022.1406	Pulsante M22-D-Y cod. 216598 + M22-A cod 216374 - BUTTON M22-D-Y COD.216598	'=QgCv	8	1

REV.	MODIFICA	DATA	FIRME
R0.2	Mod. lay-out Mep30 descrizioni e distinta IT-EN	22/03/2010	Bartoli
R0.1	Aggiunto traguardatore laser e luce zona taglio	23/09/2009	Bartoli

Dis. N. DM
CAD SPAC
File DM1318P-240\1.DWG
Data 10-09-2009

Impianto: DM 13" 18" P - 240

Denominazione: DISTINTA MATERIALI
Material list

Ordine
Commessa
Esecutore: Bartoli

FOGLIO 27
ULTIMO 103

0	1	2	3	4	5	6	7	8	9

NOME/ITEM	TIPO/TYPE	DESCRIZIONE/DESCRIPTION	QUADRO/BOARD	FG/SH	Q.TA/Q.TY
'-S3	'022.0937	Blocchetto NA M22-K10 cod. 216376 - NORMALLY OPEN CONTACT	'=QgCv	8	1
'-S3	'022.0937	Blocchetto NA M22-K10 cod. 216376 - NORMALLY OPEN CONTACT	'=QgCv	8	1
'-S4	'022.1245	Emergenza M22-PVT cod.263467 + M22-A 216374 + M22-K01 216378 - EMERGENCY SWITCH M22-PVT COD.26346+M22- A 216374+M22-K01 216378	'=QgCv	8	1
'-S50	'022.3053	Selettore 2 velocita 16A T0-2-8900 - 1 SPEED SWITCH .16 AMP.TO-2-8900 E COD.207398	'=QgCv	12	1
'-SF1	'047.0182	Sacchetto portafusibili - PRINTED ENVELOPES	'=QgCv	20	1
'-SF1	'022.1133	Microfusibile T 1AMP. 250V - FUSE T 1AMP. 250V. M 18-20-23	'=QgCv	20	1
'-T1	'022.1671	Trasformatore 100VA V.240-480 S0.24 S0.19 - TRANS.30+70W 0-208-575.60HZ V.0-24.60HZ	'=QgCv	6	1
'-T10	'022.0512	Trasformatore 5W 24VAC/5vcc lasertec AL12 - TRANS 5W DC-LASER TEC AL12- 24AC/5 DC CABLE 50CM	'=QgCv	15	1
'-TF1	'031.2622	Targa sostituzione fusibili - REPLACE FUSE ADHESIVE SIGN	'=QgCv	20	1
'-TF2	'025.0604	Guarnizione aerstop - CONTROL PANEL GASKET	'=QgCv	20	2.10
'-U1	'054.4562	Inverter 400V 5KW FR-E740-170NA MITSUBISHI - INVERTER 400V 5KW FR-E740-170NA MITSUBISHI	'=QgCv	5	1
'-UDY	'022.0757	Display MEP30 LCD 2x16 - DISPLAY MEP 30	'=QgCv	10	1
'-UPC	'022.2818	Controllore MEP 30/B con rele - MEP 32 /B CONTROLLER FOR NC EVO	'=QgCv	10	1
'-UTA	'031.2013	Consolle di programmazione DM1318P - PROGRAMMING CONSOLLE DM13/18P	'=QgCv	10	1
'-XENC	'022.0409	EC-M10F-LK-A8-5 - COMPLETE CONNECT WITH 5 M CABLE EC-M 10 -LK-A8-5 FOR NCODER	'=QgCv	17	1
'-XQG2	'022.2258	Morsetto da 2.5 mm singolo per 4 fili a molla 56.703.5155.0 - QUADRUPLE POLE SPRING TERMINAL 56.703.5155.0	'=QgCv	7	1
'-XQG2	'022.2256	Morsetto da 2.5 mm singolo per 2 fili a molla 56.703.0055.0 - SINGLE POLE SPRING TERMINAL 56.703.0055.0	'=QgCv	15	1
'-XQG2	'022.2258	Morsetto da 2.5 mm singolo per 4 fili a molla 56.703.5155.0 - QUADRUPLE POLE SPRING TERMINAL 56.703.5155.0	'=QgCv	12	1
'-XQG4	'022.2258	Morsetto da 2.5 mm singolo per 4 fili a molla 56.703.5155.0 - QUADRUPLE POLE SPRING TERMINAL 56.703.5155.0	'=QgCv	8	1
'-XQG4	'022.2288	Piastra di chiusura x morsetto a 4 fili 07.312.7155.0 - CLOSING PLATE 07.312.7155.0	'=QgCv		1
'-XQGFU	022.2256 + 022.1136 + 022.1136	Morsetto portafusibile a molla + N° 2 fusibili da 500V 5A - FUSE CARRIER WITH SPRING + NR.2 FUSE 500V 5A	'=QgCv	6	4
'-XQGPE	'022.0377	Morsetto PE da 2.5 mm singolo per 2 fili a molla WK4 SLU - TERMINAL 8 WA 1011- 1PF00 EARTH	'=QgCv	4	1
'-XQGPE	'022.2247	Morsetto PE da 2.5 mm singolo per 4 fili a molla WK4 D2/2 SLU - WPE 1,5 ZZ FIXED GROUND TERMINAL	'=QgCv	6	1
'-XSA	'022.2256	Morsetto da 2.5 mm singolo per 2 fili a molla 56.703.0055.0 - SINGLE POLE SPRING TERMINAL 56.703.0055.0	'=SaCv	12	2
'-XSA	'022.2256	Morsetto da 2.5 mm singolo per 2 fili a molla 56.703.0055.0 - SINGLE POLE SPRING TERMINAL 56.703.0055.0	'=SaCv	8	6
'-XSA	'022.2256	Morsetto da 2.5 mm singolo per 2 fili a molla 56.703.0055.0 - SINGLE POLE SPRING TERMINAL 56.703.0055.0	'=SaCv	15	3
'-XSA	'022.2258	Morsetto da 2.5 mm singolo per 4 fili a molla 56.703.5155.0 - QUADRUPLE POLE SPRING TERMINAL 56.703.5155.0	'=SaCv	16	2
'-QD2	'011.1196	Scatola derivazione metallica 240x80x70 - METAL JUNCTION BOX 240X80X70	'=SaCv	21	1

REV.	MODIFICA	DATA	FIRME
R0.2	Mod. lay-out Mep30 descrizioni e distinta IT-EN	22/03/2010	Bartoli
R0.1	Aggiunto traguardatore laser e luce zona taglio	23/09/2009	Bartoli

Dis. N. DM
CAD SPAC
File DM1318P-240\1.DWG
Data 10-09-2009

Impianto: DM 13" 18" P - 240
Denominazione: DISTINTA MATERIALI
Material list

Ordine
Commessa
Esecutore: Bartoli

FOGLIO 28
ULTIMO 103

Tipo/Type	Formaz./Format.	Descrizione/Description	Diam./Diam.	Lungh./Lenght
022.0136	4shAWG20	Cavo schermato per potenziometro - Shield cable for potenetiometer	5	6.00
022.0170	12shAWG20	Cavo 12xAWG20 schermato - Shield cable 12xAWG20	10	16.00
022.0130	4gAWG16	Cavo 4xAWG16 - Cable 4xAWG16	10	9.50
022.0139	2xAWG20	Cavo 2xAWG20 - Cable 2xAWG20	4	7.50
022.0225	4gAWG18	Cavo 4xAWG18 - Cable 4xAWG18	8	10.00
022.0376	3x0.5	Cavo pressofuso con connettore M12 - Cable with connector M12	4	5.00
022.0409	10SH0.5	Cavo encoder 10x0,5 sch. con connettore - Encoder shield cable 10x0,5 with connector	9	5.00
022.0178	4shAWG18	Cavo 4xAWG20 schermato - Shield cable 4xAWG18	10	7.00

REV.	MODIFICA	DATA	FIRME
R0.2	Mod. lay-out Mep30 descrizioni e distinta IT-EN	22/03/2010	Bartoli
R0.1	Aggiunto traguardatore laser e luce zona taglio	23/09/2009	Bartoli

Dis. N. DM
CAD SPAC
File DM1318P-240\1.DWG
Data 10-09-2009

Impianto: DM 13" 18" P - 240
Denominazione: DISTINTA MATERIALI
Material list

Ordine
Commessa
Esecutore: Bartoli

FOGLIO 29
ULTIMO 103

Sim.\Sym.	File	Descrizione\Description
	POMPAID	Pompa idraulica *Hydraulic pump*
	BLK106	Raccordo idraulico *Pipe fitting*
	FFLH53	Valvola riduttrice *Reducing valve*
	FFLH97	Elettovalvola direz. 4/3 elettroidr. *Double-acting solenoid valve 4/3*
	FFLP42	Manometro *Gauge*
M	FFLP53	Motore elettrico *Electric motor*
	FFLP62B	Valvola di blocco *Check valve*
	FFLP75A	Cilindro a doppio effetto *Double-acting cylinder*
	FILTROID	Filtro aspirazione *Suction filter*
	NIPPLO-FOR	Raccordo idraulico a flusso ridotto *Reduced flow pipe fitting*
	GIU_POM	Giunto meccanico asse pompa *Pump axis coupling*

Sim.\Sym.	File	Descrizione\Description
	REG_FLU	Regolatore di flusso con by-pass elettrico *Flow regulator with electric by-pass*

Sim.\Sym.	File	Descrizione\Description

REV.	MODIFICA	DATA	FIRME
R0.3	Mod.lunghezza tubi idraulici + modifica manifold (-MF2)	18/06/2014	Solfanelli
R0.2	Mod. descrizioni distinta IT-EN	22/03/2010	Bartoli

Dis. N. DM
CAD SPAC
File DM1318P-240\2.DWG
Data 10-09-2009

Impianto: *DM 13" 18" P*
Denominazione: LISTA SIMBOLI
Simbol key

Ordine
Commessa
Esecutore: Bartoli

FOGLIO 100
ULTIMO 106

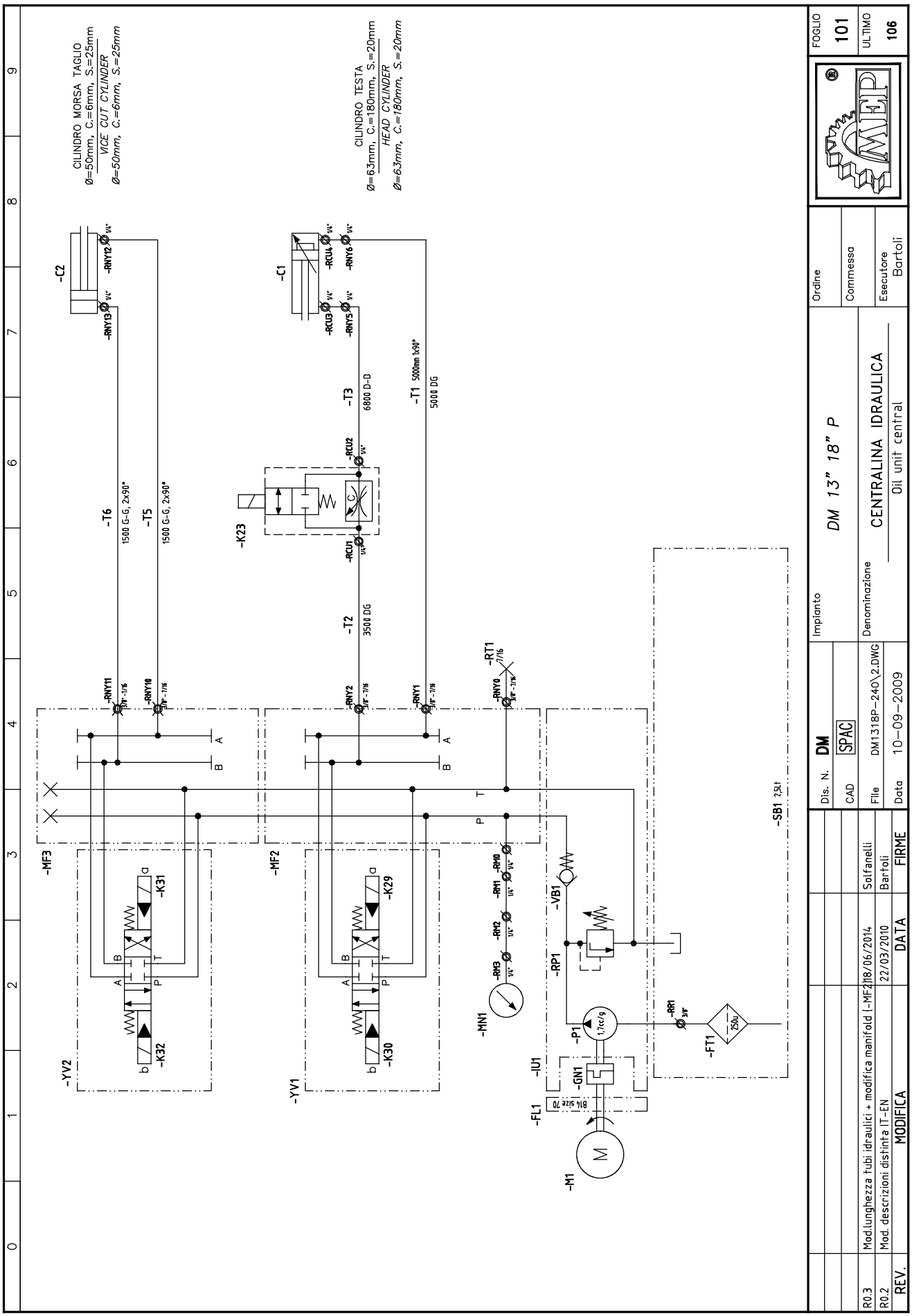
CILINDRO MORSA TAGLIO
Ø=50mm, C.=6mm, S.=25mm
VICE CUT CYLINDER
Ø=50mm, C.=6mm, S.=25mm
CILINDRO TESTA
Ø=63mm, C.=180mm, S.=20mm
HEAD CYLINDER
Ø=63mm, C.=180mm, S.=20mm
-C2
-C1
-RNY13
-RNY12
-RCU3
-RCU4
-RNY5
-RNY6
-T6
1500 G-G, 2x90°
-T5
1500 G-G, 2x90°
-T3
6800 D-D
-T1 5000mm 1x90°
5000 DG
-K23
-RCU2
-RCU1
-T2
3500 DG
-RNY11
-RNY10
-RNY2
-RNY1
-RNY0
-RT1
-MF3
-MF2
-K31
-K32
-K29
-K30
-YV2
-YV1
-RM3
-RM2
-RM1
-RM0
-MN1
-VB1
-RP1
-P1
-IU1
-GN1
-FL1
-M1
-RR1
-FT1
-SB1 2,5Lt
FOGLIO
101
ULTIMO
106
Ordine
Commessa
Esecutore
Bartoli
Impianto
DM 13" 18" P
Denominazione
CENTRALINA IDRAULICA
Oil unit central
Dis. N.
DM
CAD
SPAC
File
DM1318P-240\2.DWG
Data
10-09-2009
R0.3
Mod.lunghezza tubi idraulici + modifica manifold (-MF2)
18/06/2014
Solfanelli
R0.2
Mod. descrizioni distinta IT-EN
22/03/2010
Bartoli
REV.
MODIFICA
DATA
FIRME

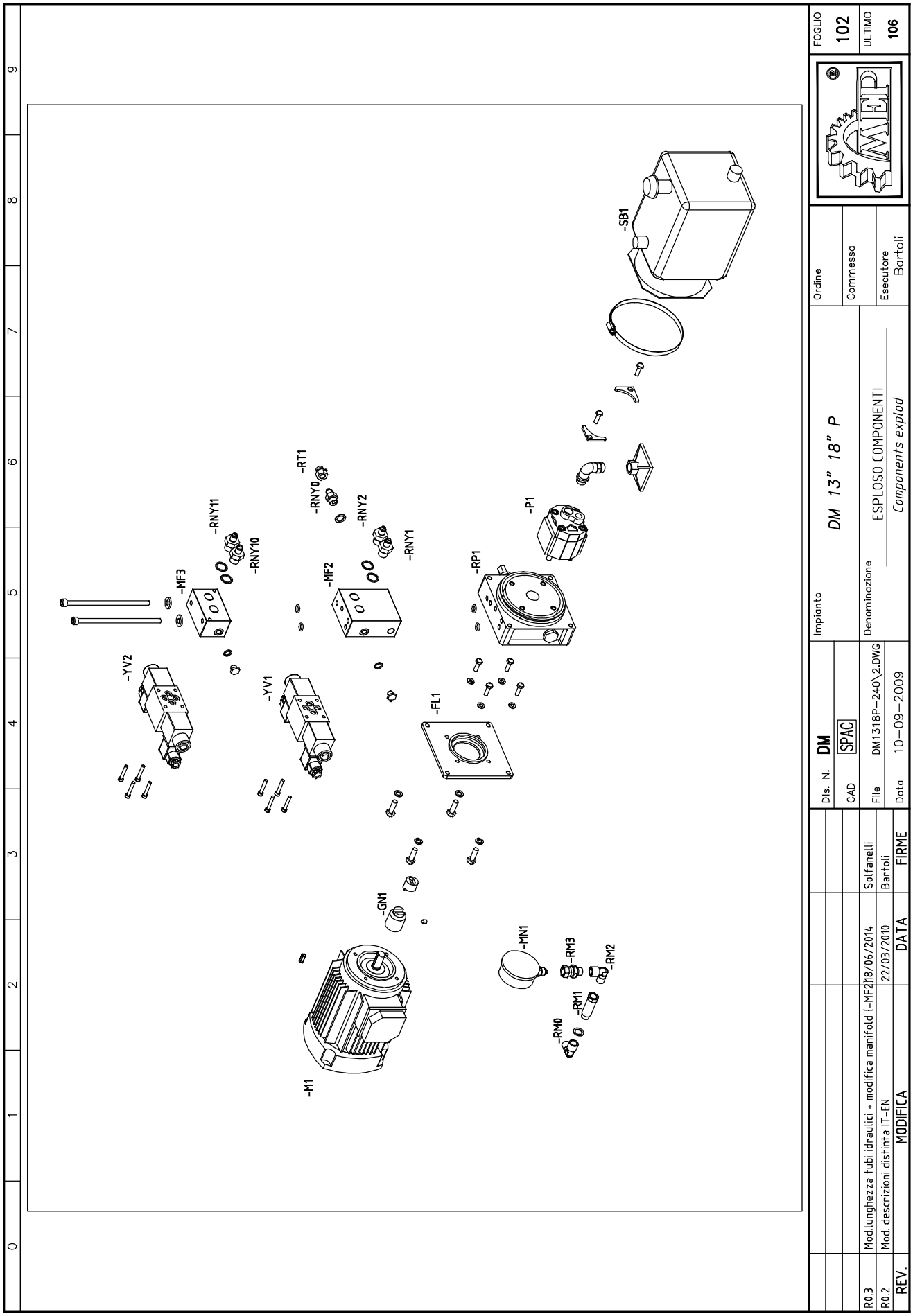
-SB1
-P1
-RP1
-RT1
-RNY0
-RNY2
-RNY1
-RNY11
-RNY10
-MF3
-MF2
-YV2
-YV1
-FL1
-GN1
-MN1
-RM3
-RM2
-RM1
-RM0
-M1
FOGLIO
102
ULTIMO
106
Ordine
Commessa
Esecutore
Bartoli
Impianto
DM 13" 18" P
Denominazione
ESPLOSO COMPONENTI
Components explod
Dis. N.
DM
CAD
SPAC
File
DM1318P-240\2.DWG
Data
10-09-2009
R0.3
Mod.lunghezza tubi idraulici + modifica manifold (-MF2)
18/06/2014
Solfanelli
R0.2
Mod. descrizioni distinta IT-EN
22/03/2010
Bartoli
REV.
MODIFICA
DATA
FIRME

0	1	2	3	4	5	6	7	8	9

Nome/Item	Tipo/Type	Descrizione/Description	Costruttore/Marke	Quadro/Board	Fg/Sh	Q.ta/Q.ty
-C1	V.d.M.	Vedi distinta meccanica	Mep	=CiBmMep	101	1
-C2	V.d.M.	Vedi distinta meccanica	Mep	=CiBmMep	101	1
-K23	043.0585	Regolatore di flusso con by-pass baffo C da 1/4"G	Mep	=CiBmMep	101	1
-RCU1	000.0P67	Riduzione gomito M/M da 1/4"G	Mep	=CiBmMep	101	1
-RCU2	000.0P67	Riduzione gomito M/M da 1/4"G	Mep	=CiBmMep	101	1
-RCU3	043.0275	Nipplo da 1/4"G	Mep	=CiBmMep	101	1
	043.0250	Riduzione gomito M/F da 1/4"G	Mep			1
-RCU4	043.0275	Nipplo da 1/4"G	Mep	=CiBmMep	101	1
	043.0250	Riduzione gomito M/F da 1/4"G	Mep			1
-RNY12	043.0275	Nipplo da 1/4"G	Mep	=CiBmMep	101	1
-RNY13	043.0275	Nipplo da 1/4"G	Mep	=CiBmMep	101	1
-RNY5	043.0275	Nipplo da 1/4"G	Mep	=CiBmMep	101	2
-RNY6	043.0275	Nipplo da 1/4"G	Mep	=CiBmMep	101	2
-T1	044.0153	Tubo idraulico 1/4"G 5000 D-G	Mep	=CiBmMep	101	1
-T2	044.0151	Tubo idraulico 1/4"G 3500 D-G	Mep	=CiBmMep	101	1
-T3	044.0170	Tubo idraulico 1/4"G 6800 D-D	Mep	=CiBmMep	101	1
-T5	044.0107	Tubo idraulico 1/4"G 1500 G-G	Mep	=CiBmMep	101	1
-T6	044.0107	Tubo idraulico 1/4"G 1500 G-G	Mep	=CiBmMep	101	1
-FL1	044.5154	Flangia accoppiamento motore C71 B14	Mep	=CiCv	101	1
-FT1	0ID.00P5	Filtro aspirazione Ø80 250µ 3/8"Gf 200.5461.12010 BUCHER	Mep	=CiCv	101	1
-GN1	044.4637	Giunto elas. lato pompa AP100 S309	Mep	=CiCv	101	1
	044.4638	Giunto elas. lato motore C80 B14 -drive 131 200.6594.0019.0 Bucher	Mep			1
-IU1	034.1383	Supporto esterno pompa BUCHER	Mep	=CiCv	101	1
-M1	019.4006	Motore da 0,5Hp C71 B14 V230-415-50Hz / V240-480-60Hz	Mep	=CiCv	101	1
-MF2	007.6714	Manifold idraulico 1 posto CETOP 3 e uscita manomnetro + uscita scarico per housing BUCHER	Mep	=CiCv	101	1
-MF3	007.6691	Manifold 1 valvole DIN24350 circuito chiuso	Mep	=CiCv	101	1
-MN1	043.0557	Manometro 0-60bar Ø40 con attacco radiale da 1/4"G	Mep	=CiCv	101	1
-P1	044.4513	Pompa ingranaggi 1,7cc/g AP100/1.7 S.309 200.7482.20020 BUCHER	Mep	=CiCv	101	1
-RM0	043.0250	Raccordo gomito M/F da 1/4"G	Mep	=CiCv	101	1
-RM1	043.0274	Raccordo diritto M/F da 1/4"G	Mep	=CiCv	101	1
-RM2	043.0250	Riduzione gomito M/F da 1/4"G	Mep	=CiCv	101	1
-RM3	043.0553	Raccordo girevole 1/4"G idraulico per manometro	Mep	=CiCv	101	1
-RNY0	007.8023	Nipplo ID. MM 1/4"G - 7/16 UNF	Mep	=CiCv	101	1
-RNY1	007.8020	Riduzione diritta M/M da 3/8"G a 7/16 UNF	Mep	=CiCv	101	1
-RNY10	007.8020	Riduzione diritta M/M da 3/8"G a 7/16 UNF	Mep	=CiCv	101	1
-RNY11	007.8020	Riduzione diritta M/M da 3/8"G a 7/16 UNF	Mep	=CiCv	101	1
-RNY2	007.8020	Riduzione diritta M/M da 3/8"G a 7/16 UNF	Mep	=CiCv	101	1
-RP1	044.1263	Valvola di massima pressione idraulica a cartuccia 200.9874.00700 BUCHER	Mep	=CiCv	101	1
-RR1	0ID.00P8	Tubo aspirazione M-M 3/8"G lungo 120mm con gomito	Mep	=CiCv	101	1
-RT1	044.4556	Tappo per manicotto 7/16 UNF	Mep	=CiCv	101	1
-SB1	0ID.0P20	Vasca olio 2,5Lt tipo P-025Q-F 200.9734.2007.0	Mep	=CiCv	101	1
-VB1	044.4554	Valvola di blocco idraulica a cartuccia 200.7876.01410 BUCHER	Mep	=CiCv	101	1
-YV1	043.1002	Elettrovalvola idraulica 4/2 con bobine 24 Vcc	Mep	=CiCv	101	1
-YV2	043.1002	Elettrovalvola idraulica 4/3 con bobine 24 Vcc	Mep	=CiCv	101	1

REV.	MODIFICA	DATA	FIRME
R0.3	Mod.lunghezza tubi idraulici + modifica manifold (-MF2)	18/06/2014	Solfanelli
R0.2	Mod. descrizioni distinta IT-EN	22/03/2010	Bartoli

Dis. N. DM
CAD SPAC
File DM1318P-240\2.DWG
Data 10-09-2009

Impianto: DM 13" 18" P
Denominazione: DISTINTA MATERIALI / MATERIAL LIST

Ordine
Commessa
Esecutore: Bartoli

FOGLIO 103
ULTIMO 106

LISTA FOGLI \ INDEX

Foglio Sheet	Descrizione Description	Revisione \ Revision 0	1	2	3	4	5	6	7	8	9
1	INDICE CONTENUTI										
	Content index										
2	INDICE CONTENUTI										
	Content index										
3	LEGENDA SIMBOLI										
	Symbol key										
4	ALIMENTAZIONE										
	Power supply										
5	ALIMENTAZIONE MOTORI										
	Motor power supply										
6	ALIMENTAZIONE TRASFORMATORI										
	Transformer power supply										
7	ALIMENTAZIONE AUSILIARI										
	Auxiliary power supply										
8	EMERGENZA E PRESSOSTATO										
	Emergency and pressure switch										
9	AUSILIARI INVERTER										
	Inverter auxiliary circuits										
10	MEP30										
	Mep30										
11	LISTA INPUT/OUTPUT										
	Input/Output list										
12	INGRESSI MEP30										
	Mep30 inputs										
13	INGRESSI MEP30										
	Mep30 inputs										

Foglio Sheet	Descrizione Description	Revisione \ Revision 0	1	2	3	4	5	6	7	8	9
14	USCITE MEP30										
	mep30 outputs										
15	USCITE MEP30										
	mep30 outputs										
16	INGRESSI ANALOGICI MEP30										
	Mep30 analogic inputs										
17	COLLEGAMENTO ENCODER										
	Encoder connection										
18	OPTIONAL										
	Optional										
19	MORSETTIERA QUADRO										
	Panel terminal board										
20	INTERNO QUADRO										
	Board inside										
21	GUAINE E ACCESSORI										
	Sheaths and accessories										
22	GUAINE E ACCESSORI										
	Sheaths and accessories										
23	RIASSUNTIVO CAVI										
	Cable summary										
24	RIASSUNTIVO CAVI										
	Cable summary										
25	RIASSUNTIVO CAVI										
	Cable summary										
26	DISTINTA MATERIALI										
	Material list										

Note :

REV.	MODIFICA	DATA	FIRME
R0.2	Mod. Lay-out Mep30 descrizioni e distinta IT-EN	22/03/2010	Bartoli
R0.1	Aggiunto traguardatore laser e luce zona taglio	23/09/2009	Bartoli

Dis. N. DM
CAD SPAC
File DM1318P-480\1.DWG
Data 10-09-2009

Impianto: DM 13" 18" P – 480

Denominazione: INDICE CONTENUTI
Content index

Ordine
Commessa
Esecutore: Bartoli

FOGLIO 1
ULTIMO 103

LISTA FOGLI \ INDEX

Foglio Sheet	Descrizione Description	Revisione \ Revision 0	1	2	3	4	5	6	7	8	9
27	DISTINTA MATERIALI										
	Material list										
28	DISTINTA MATERIALI										
	Material list										
29	DISTINTA MATERIALI										
	Material list										
100	LISTA SIMBOLI										
	Simbol key										
101	CENTRALINA IDRAULICA										
	Oil unit central										
102	DISTINTA CENTRALINA										
	Oil unit material list										
103	DISTINTA CENTRALINA										
	Oil unit material list										

Foglio Sheet	Descrizione Description	Revisione \ Revision 0	1	2	3	4	5	6	7	8	9

Note :

REV.	MODIFICA	DATA	FIRME
R0.2	Mod. Lay-out Mep30 descrizioni e distinta IT-EN	22/03/2010	Bartoli
R0.1	Aggiunto traguardatore laser e luce zona taglio	23/09/2009	Bartoli

Dis. N. DM
CAD SPAC
File DM1318P-480\1.DWG
Data 10-09-2009

Impianto: DM 13" 18" P - 480
Denominazione: INDICE CONTENUTI
Content index

Ordine
Commessa
Esecutore: Bartoli

FOGLIO 2
ULTIMO 103

Sim.\Sym.	File	Descrizione\Description
	M2	Motore asincrono trifase *THREE-PHASE INDUCTION MOTOR*
	Q1360	Int. automatico magnetotermico sezionatore tripolare *THREE-PHASE AUITOMATIC SWITCH*
	R6	Potenziometro *POTENTIOMETER*
	R60	Potenziometro *POTENTIOMETER*
	S2	Comando a Pulsante NO *PUSH BOTTON NO*
	S4C	Pulsante di emergenza NC *EMERGENCY PUSH BOTTON NC*
	S5	Comando rotativo a due posizioni NO *ROTARY SELECTOR TWO POSITION*
	S7	Comando a pedale NO *CONTROL PEDAL NO*
	S8	Comandato dalla pressione (pressostato) NO *PRESSURE SWITCH*
	S15C	Comandato dal livello di un fluido (livellostato) NC *WATER GAUGE NC*
	S24C	Pulsante di emergenza a posizione stabile NC *EMERGENCY PUSH BOTTON NC*

Sim.\Sym.	File	Descrizione\Description
	T1	Trasformatore di corrente *CURRENT TRASFORMER*
	Y1	Elettrovalvola aperta (in chiusura) *SOLENOID VALVE*
	KA1	Bobina rele' Aux *AUXILIARY RELAY COIL*
	KM1	Bobina contattore *CONTACTOR COIL*
	BLK26	Connettore EV in AC *SV AC CONNECTOR*
	BLK41	Raccordo SX *CONNECTOR SX*
	BLK42	Raccordo DX *CONNECTOR DX*
	BLK43	Tubo corrugato *CORRUGATED PIPE*
	BLK44	Riduzione PG *PG ADAPTER*
	BLK51	Dado PG *NUT PG*
	BLK49	Pressa-cordone PG *FAIR LEAD*

Sim.\Sym.	File	Descrizione\Description
	BLK50	Guaina termorestringente Ø26mm *SHEATH Ø26mm*
	BLK57	Guaina termorestringente Ø10mm *SHEATH Ø10mm*
	BLK55	Flangia di passaggio *LOOSE FLANGE*
	BLK56	Terminale a puntale *TERMINAL*
	BLK57	Filo unipolare *WIRE*
	BLK58	Fascette plastiche di fissaggio *CLAMP*
	BLK60	Terminale a occhiello *TERMINAL*
	BLK66	Sacchetto portafusibile *BAG FUSE*

REV.	MODIFICA	DATA	FIRME
R0.2	Mod. Lay-out Mep30 descrizioni e distinta IT-EN	22/03/2010	Bartoli
R0.1	Aggiunto traguardatore laser e luce zona taglio	23/09/2009	Bartoli

Dis. N. **DM**
CAD SPAC
File DM1318P-480\1.DWG
Data 10-09-2009

Impianto: *DM 13" 18" P - 480*
Denominazione: LEGENDA SIMBOLI
Symbol key

Ordine
Commessa
Esecutore: Bartoli

FOGLIO 3
ULTIMO 103

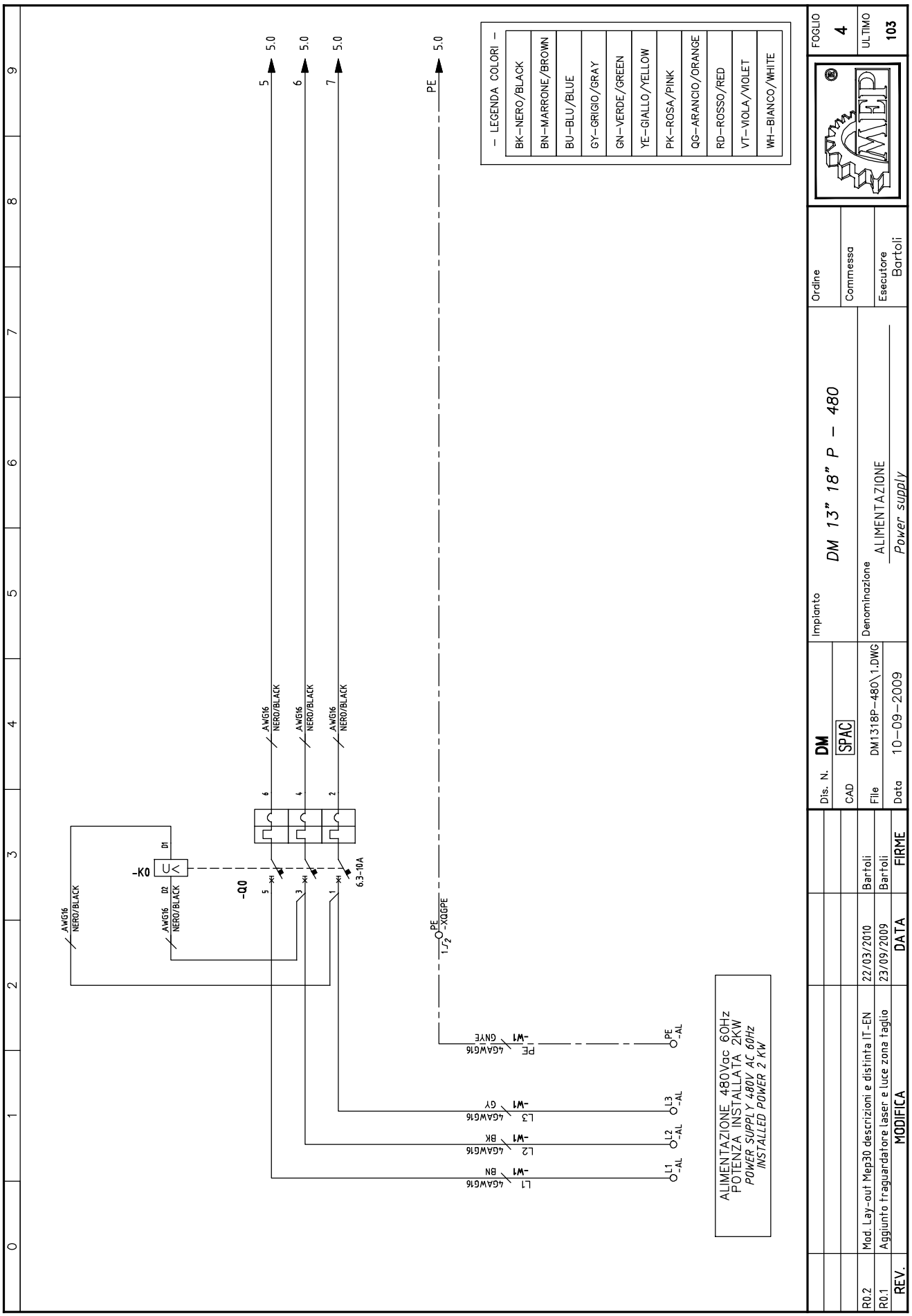
– LEGENDA COLORI –
BK–NERO/BLACK
BN–MARRONE/BROWN
BU–BLU/BLUE
GY–GRIGIO/GRAY
GN–VERDE/GREEN
YE–GIALLO/YELLOW
PK–ROSA/PINK
QG–ARANCIO/ORANGE
RD–ROSSO/RED
VT–VIOLA/VIOLET
WH–BIANCO/WHITE
ALIMENTAZIONE 480Vac 60Hz
POTENZA INSTALLATA 2KW
POWER SUPPLY 480V AC 60Hz
INSTALLED POWER 2 KW
DM 13" 18" P – 480
ALIMENTAZIONE
Power supply
Bartoli
DM1318P-480\1.DWG
10-09-2009
SPAC
FOGLIO 4
ULTIMO 103
R0.2 Mod. Lay-out Mep30 descrizioni e distinta IT-EN 22/03/2010 Bartoli
R0.1 Aggiunto traguardatore laser e luce zona taglio 23/09/2009 Bartoli
REV. MODIFICA DATA FIRME

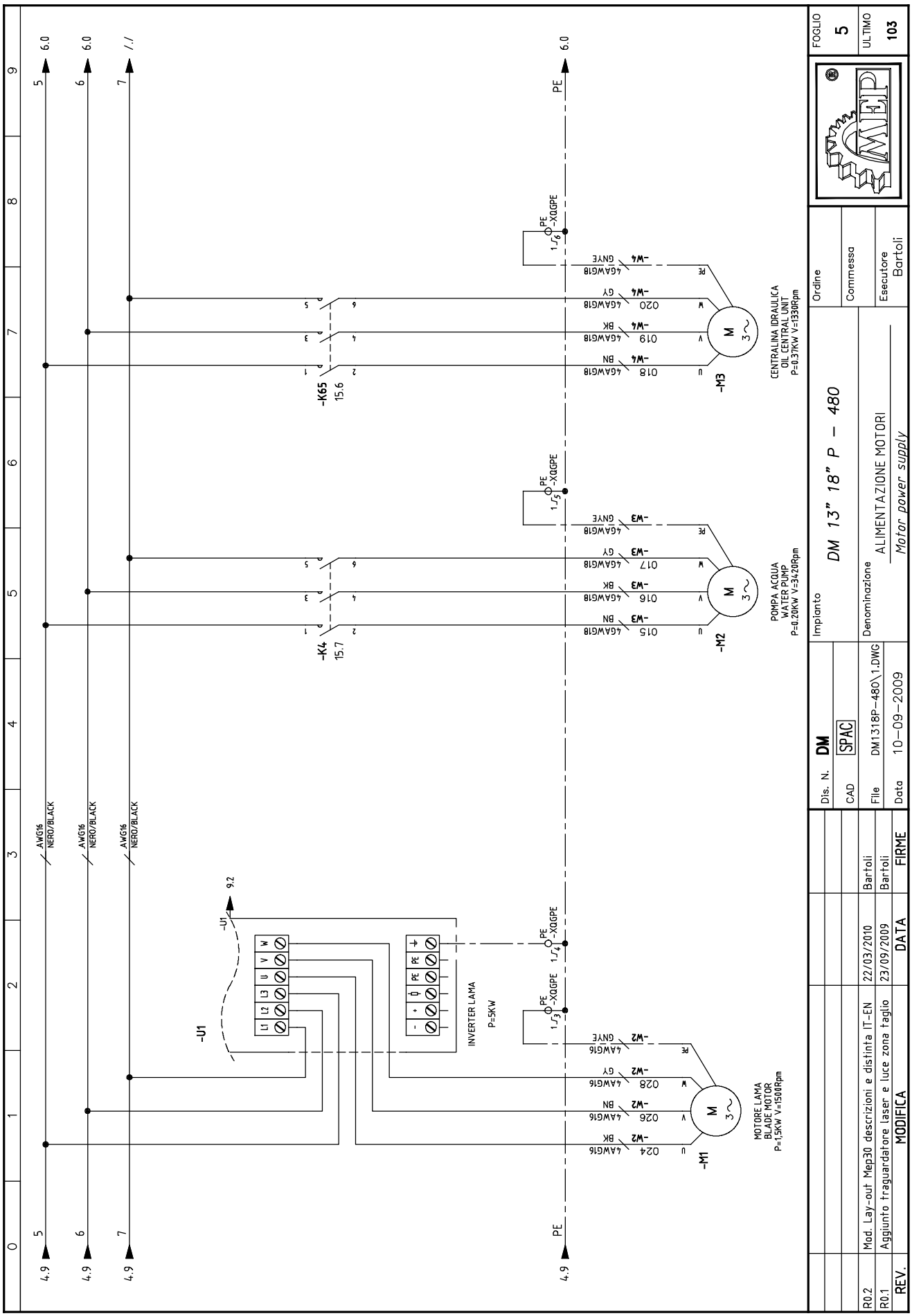
-M1
MOTORE LAMA
BLADE MOTOR
P=1,5KW V=1500Rpm
-M2
POMPA ACQUA
WATER PUMP
P=0,20KW V=3420Rpm
-M3
CENTRALINA IDRAULICA
OIL CENTRAL UNIT
P=0,33KW V=1330Rpm
-K4
15.7
-K65
15.6
-U1
INVERTER LAMA
P=5KW
AWG16
NERO/BLACK
PE
-XQGPE
4AWG18
GNYE
GY
BK
BN
4AWG16
GNYE
GY
BK
BN
FOGLIO
5
ULTIMO
103
Ordine
Commessa
Esecutore
Bartoli
Impianto
DM 13" 18" P – 480
Denominazione
ALIMENTAZIONE MOTORI
Motor power supply
Dis. N.
DM
CAD
SPAC
File
DM1318P-480\1.DWG
Data
10-09-2009
R0.2
Mod. Lay-out Mep30 descrizioni e distinta IT-EN
22/03/2010
Bartoli
R0.1
Aggiunto fraguardatore laser e luce zona taglio
23/09/2009
Bartoli
REV.
MODIFICA
DATA
FIRME

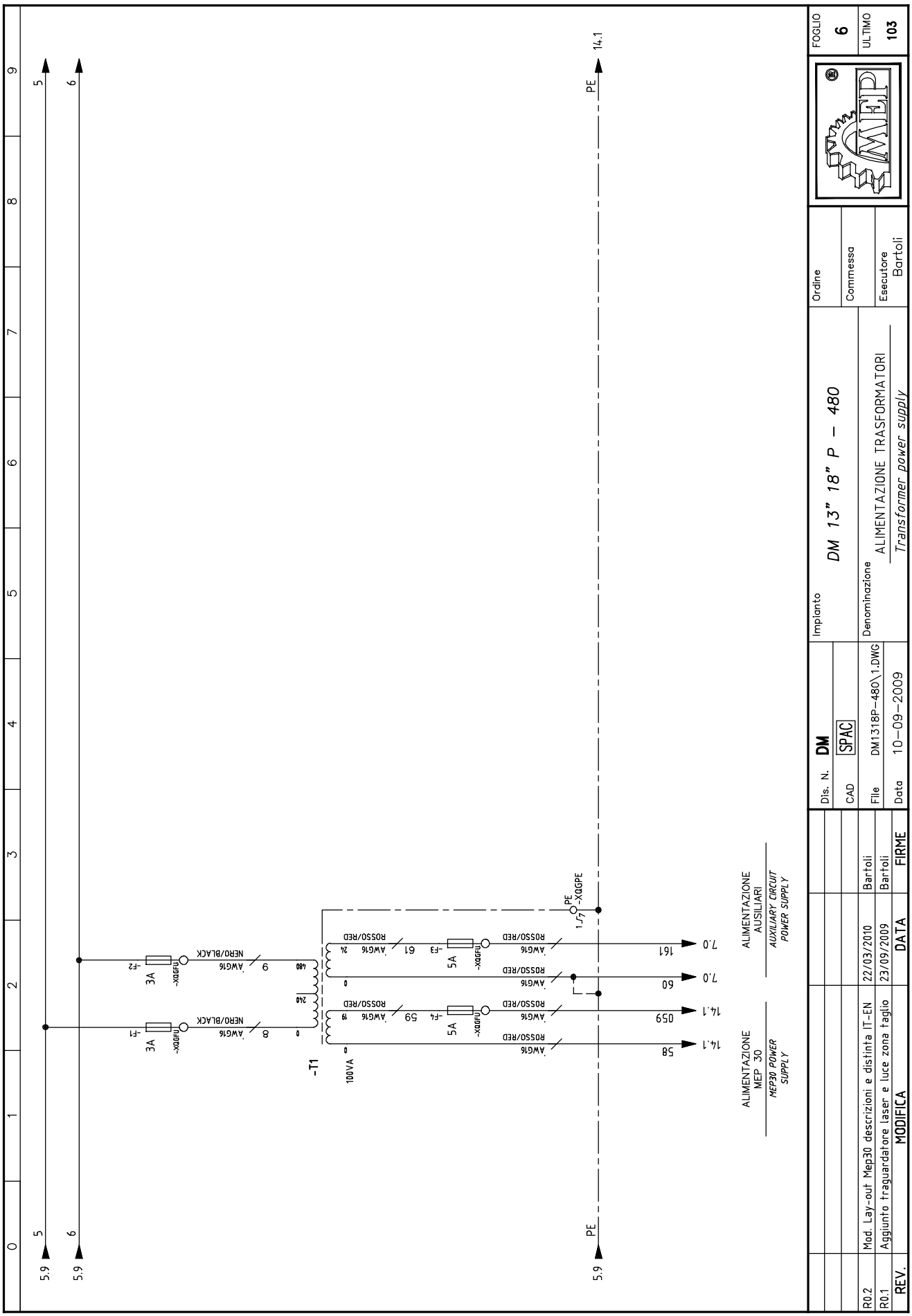
0 1 2 3 4 5 6 7 8 9
5.9
5
6
PE
14.1
-F1
3A
-F2
3A
NERO/BLACK
AWG16
-XQGFU
-T1
100VA
240
480
-F3
-F4
5A
ROSSO/RED
-XQGPE
1/7
7.0
14.1
161
60
059
58
ALIMENTAZIONE AUSILIARI
AUXILIARY CIRCUIT POWER SUPPLY
ALIMENTAZIONE MEP 30
MEP30 POWER SUPPLY
FOGLIO 6
ULTIMO 103
Ordine
Commessa
Esecutore Bartoli
Impianto
DM 13" 18" P – 480
Denominazione
ALIMENTAZIONE TRASFORMATORI
Transformer power supply
Dis. N. DM
CAD SPAC
File DM1318P-480\1.DWG
Data 10-09-2009
R0.2 Mod. Lay-out Mep30 descrizioni e distinta IT-EN 22/03/2010 Bartoli
R0.1 Aggiunto traguardatore laser e luce zona taglio 23/09/2009 Bartoli
REV. MODIFICA DATA FIRME

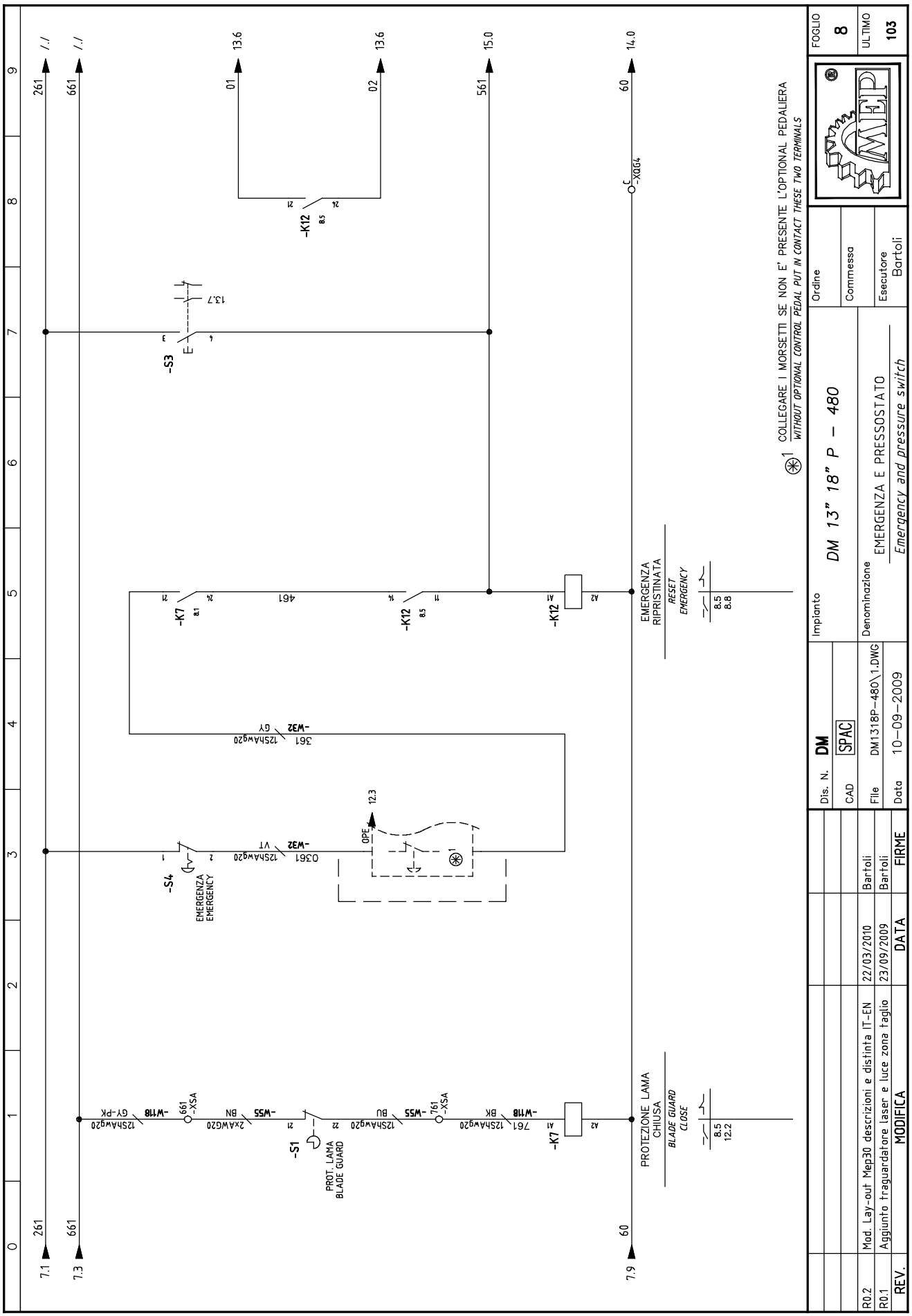
COLLEGARE I MORSETTI SE NON E' PRESENTE L'OPTIONAL PEDALIERA
WITHOUT OPTIONAL CONTROL PEDAL PUT IN CONTACT THESE TWO TERMINALS
DM 13" 18" P – 480
EMERGENZA E PRESSOSTATO
Emergency and pressure switch
Impianto
Denominazione
Ordine
Commessa
Esecutore
Bartoli
Dis. N. DM
CAD SPAC
File DM1318P-480\1.DWG
Data 10-09-2009
FOGLIO 8
ULTIMO 103
R0.2 Mod. Lay-out Mep30 descrizioni e distinta IT-EN 22/03/2010 Bartoli
R0.1 Aggiunto fraguardatore laser e luce zona taglio 23/09/2009 Bartoli
REV. MODIFICA DATA FIRME
-S3
-K12
-K7
-S4
EMERGENZA
EMERGENCY
-S1
PROT. LAMA
BLADE GUARD
-W32
-W18
-W55
-XSA
-XQG4
EMERGENZA
RIPRISTINATA
RESET
EMERGENCY
PROTEZIONE LAMA
CHIUSA
BLADE GUARD
CLOSE

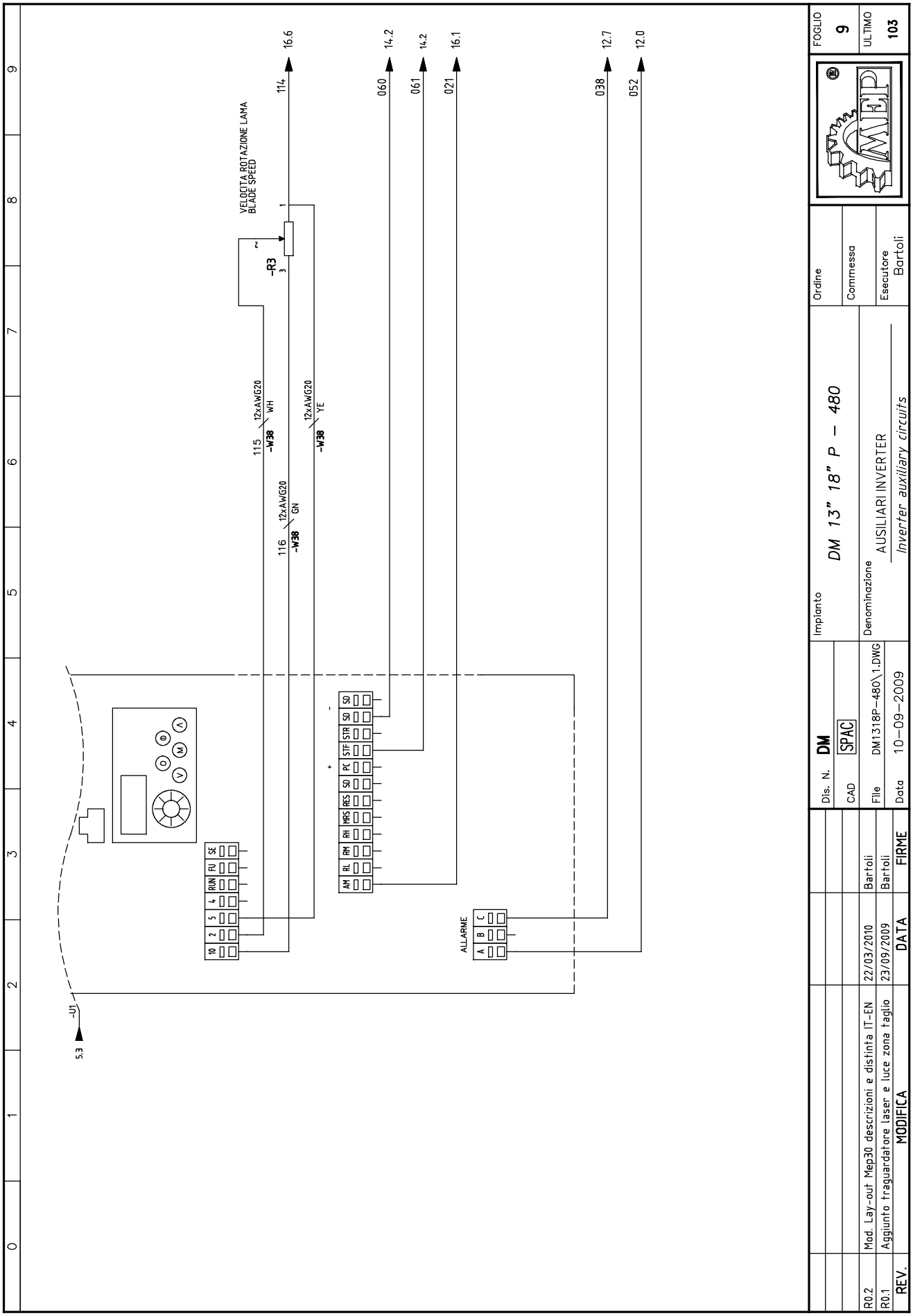
VELOCITA ROTAZIONE LAMA
BLADE SPEED
-R3
114
16.6
060
14.2
061
14.2
021
16.1
038
12.7
052
12.0
115
116
12xAWG20
WH
GN
YE
-W38
-U1
5.3
10
2
5
4
RUN
FU
SE
AM
RL
RM
RH
MRS
RES
SD
PC
STF
STR
ALLARME
A
B
C
FOGLIO
9
ULTIMO
103
Ordine
Commessa
Esecutore
Bartoli
Impianto
DM 13" 18" P – 480
Denominazione
AUSILIARI INVERTER
Inverter auxiliary circuits
Dis. N.
DM
CAD
SPAC
File
DM1318P-480\1.DWG
Data
10-09-2009
R0.2
Mod. Lay-out Mep30 descrizioni e distinta IT-EN
22/03/2010
Bartoli
R0.1
Aggiunto traguardatore laser e luce zona taglio
23/09/2009
Bartoli
REV.
MODIFICA
DATA
FIRME

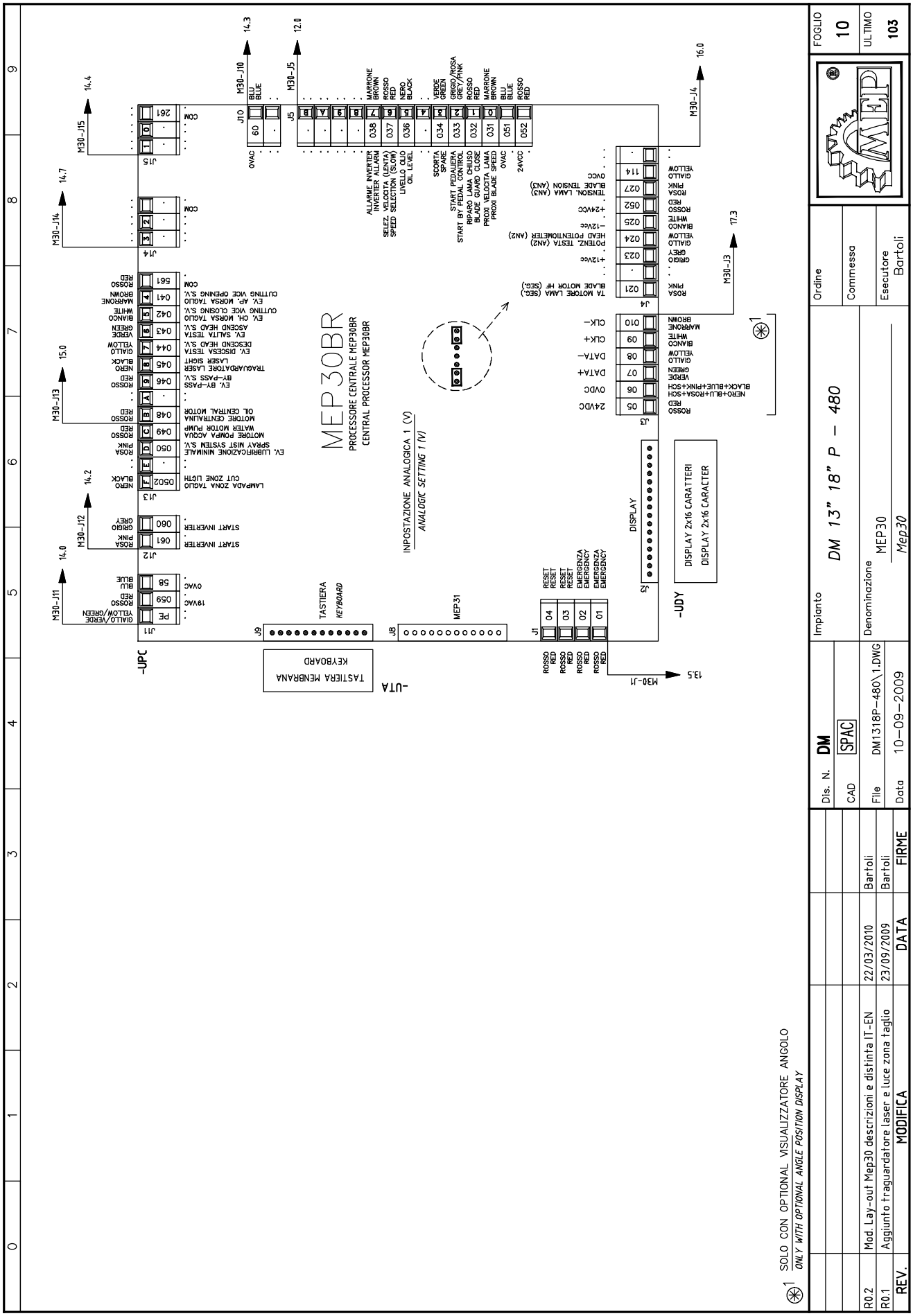
MEP30BR
PROCESSORE CENTRALE MEP30BR
CENTRAL PROCESSOR MEP30BR
INPOSTAZIONE ANALOGICA 1 (V)
ANALOGIC SETTING 1 (V)
TASTIERA MEMBRANA
KEYBOARD
TASTIERA
KEYBOARD
DISPLAY 2x16 CARATTERI
DISPLAY 2x16 CARACTER
-UPC
-UTA
-UDY
SOLO CON OPTIONAL VISUALIZZATORE ANGOLO
ONLY WITH OPTIONAL ANGLE POSITION DISPLAY
Impianto
DM 13" 18" P - 480
Denominazione
MEP30
Mep30
Ordine
Commessa
Esecutore
Bartoli
FOGLIO
10
ULTIMO
103
Dis. N.
DM
CAD
SPAC
File
DM1318P-480\1.DWG
Data
10-09-2009
R0.2
Mod. Lay-out Mep30 descrizioni e distinta IT-EN
22/03/2010
Bartoli
R0.1
Aggiunto traguardatore laser e luce zona taglio
23/09/2009
Bartoli
REV.
MODIFICA
DATA
FIRME

0	1	2	3	4	5	6	7	8	9

J1 4PIN — EMERGENZA/RESET / *EMERGENCY/RESET*

01	ROSSO / *RED*	EMERGENZA / *EMERGENCY*
02	ROSSO / *RED*	EMERGENZA / *EMERGENCY*
03	ROSSO / *RED*	RESET / *RESET*
04	ROSSO / *RED*	RESET / *RESET*

J2 16PIN — DISPLAY / *DISPLAY*

J3 6PIN — INGRESSI ENCODER / *ENCODER INPUT*

05	ROSSO / *RED*	ALIMENTAZIONE (+24V) / *POWER SUPPLY (+24V)*
06	BLU+ROSA+NERO / *BLUE+PINK+BLACK*	ALIMENTAZIONE (0V) / *POWER SUPPLY (0V)*
07	VERDE / *GREEN*	DATA + / *DATA +*
08	GIALLO / *YELLOW*	DATA – / *DATA -*
09	BIANCO / *WHITE*	CLOCK + / *CLOCK+*
010	MARRONE / *BROWN*	CLOCK – / *CLOCK -*

J4 9PIN — INGRESSI ANALOGICI / *ANALOG INPUT*

021	ROSA / *PINK*	TA MOTORE LAMA (SEG.) / *BLADE MOTOR HF (SEG.)*
//	NC / *NC*	NC / *NC*
023	GRIGIO / *GREY*	ALIMENTAZIONE POT.(+12V) / *POT. POWER SUPPLY (+ 12 V)*
024	GIALLO / *YELLOW*	POTENZIOMETRO TESTA / *HEAD POTENTIOMETER*
025	BIANCO / *WHITE*	ALIMENTAZIONE POT. (0V) / *POT. POWER SUPPLY (0 V)*
052	ROSSO / *RED*	ALIMENTAZIONE AN3 (+24V) / *AN3 POWER SUPPLY (+24V)*
027	ROSA / *PINK*	TENS. LAMA (0–10V SEGN.) / *BLADE TENSION (0-10V SIGN.)*
114	GIALLO / *YELLOW*	ALIMENTAZIONE AN3 (0V) / *AN3 POWER SUPPLY (0V)*
//	NC / *NC*	NC / *NC*

J5 14PIN — INGRESSI DIGITALI MEP 30 / *MEP 30 DIGITAL INPUTS*

052	ROSSO / *RED*	24VCC / *24VCC*
051	BLU / *BLUE*	0VCC / *0VCC*
031	MARRONE / *BROWN*	PROXI VELOCITA LAMA / *PROXI BLADE SPEED*
032	ROSSO / *RED*	RIPARO LAMA CHIUSO / *BLADE GUARD CLOSE*
033	GRIGIO/ROSA / *GREY/PINK*	START DA PEDALIERA / *START BY PEDAL CONTROL*
034	VERDE / *GREEN*	SCORTA / *SPARE*
//	NC / *NC*	NC / *NC*
036	NERO / *BLACK*	LIVELLO OLIO / *OIL LEVEL*
037	ROSSO / *RED*	SELEZ. VELOCITA / *SPEED SELECTION*
038	MARRONE / *BROWN*	ALLARME INVERTER / *INVERTER ALLARM*
//	NC / *NC*	NC / *NC*
//	NC / *NC*	NC / *NC*
//	NC / *NC*	NC / *NC*
//	NC / *NC*	NC / *NC*

J8 12PIN — MEP 31 / *MEP31*

J9 12PIN — TASTIERA / *KEYBOARD*

J10 2PIN — ALIMENTAZIONE USCITE / *OUTPUT POWER SUPPLY*

•	NC / *NC*	NC / *NC*
60	BLU / *BLUE*	0VAC / *0VAC*

J11 3PIN — ALIMENTAZIONE MEP30 / *POWER SUPPLY MEP30*

58	BLU / *BLUE*	0VAC / *0VAC*
059	ROSSO / *RED*	19VAC / *19VAC*
//	GIALLO/VERDE / *YELLOW/GREEN*	PE / *PE*

J12 2PIN — MARCIA INVERTER / *INVERTER RUN*

060	GRIGIO / *GREY*	MARCIA INVERTER / *INVERTER RUN*
061	ROSA / *PINK*	MARCIA INVERTER / *INVERTER RUN*

J13 13PIN — USCITE DIGITALI C4–CF / *C4-CF DIGITAL OUTPUTS*

561	ROSSO / *RED*	COMUNE USCITE C4–CF / *COMMON OUTPUT C4-CF*
041	MARRONE / *BROWN*	EV. APERT. MORSA TAGLIO / *CUTTING VICE OPENING S.V.*
042	BIANCO / *WHITE*	EV.CHIUSURA MORSA TAGLIO / *CUTTING VICE CLOSING SV*
043	VERDE / *GREEN*	EV. SALITA TESTA / *ASCEND HEAD S.V.*
044	GIALLO / *YELLOW*	EV DISCESA TESTA / *DESCEND HEAD S.V.*
045	NERO / *BLACK*	TRAGUARDATORE LASER / *LASER SIGHT*
046	ROSSO / *RED*	EV. BY–PASS / *BY-PASS S.V.*
//	NC / *NC*	NC / *NC*
048	ROSSO / *RED*	MOTORE CENTRALINA / *OIL CENTRAL MOTOR*
049	ROSSO / *RED*	MOTORE POMPA ACQUA / *WATER MOTOR PUMP*
050	ROSA / *PINK*	EV. LUBRIF. MINIMALE / *SPRAY MIST SYSTEM S.V.*
//	NC / *NC*	NC / *NC*
0502	NERO / *BLACK*	LAMPADA ZONA TAGLIO / *CUT ZONE LIGTH*

REV.	MODIFICA	DATA	FIRME
R0.2	Mod. Lay-out Mep30 descrizioni e distinta IT-EN	22/03/2010	Bartoli
R0.1	Aggiunto traguardatore laser e luce zona taglio	23/09/2009	Bartoli

Dis. N. DM
CAD SPAC
File DM1318P-480\1.DWG
Data 10–09–2009

Impianto: DM 13" 18" P – 480
Denominazione: LISTA INPUT/OUTPUT / *Input/Output list*
Ordine
Commessa
Esecutore: Bartoli

FOGLIO 11
ULTIMO 103

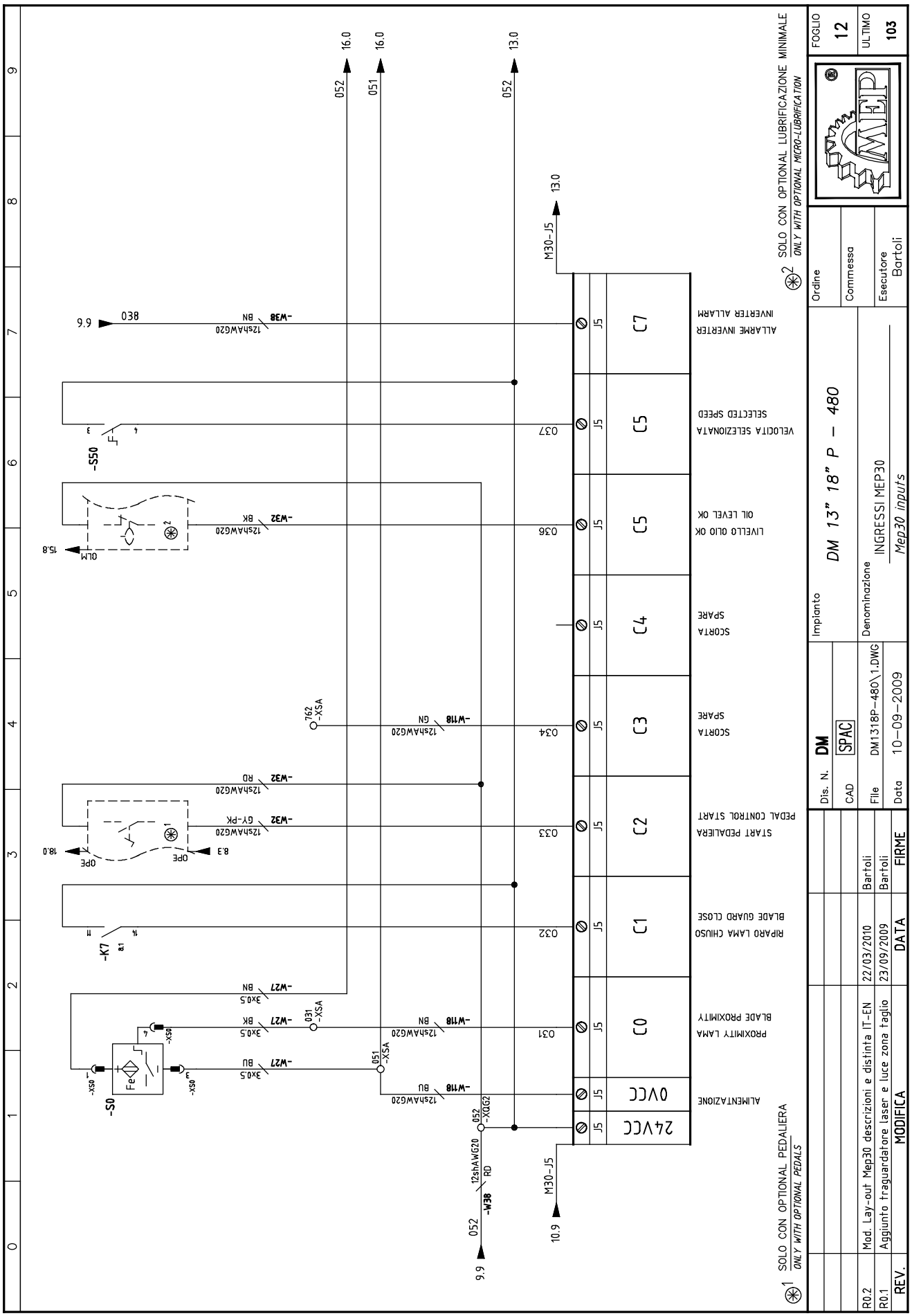
SOLO CON OPTIONAL LUBRIFICAZIONE MINIMALE
ONLY WITH OPTIONAL MICRO-LUBRIFICATION
SOLO CON OPTIONAL PEDALIERA
ONLY WITH OPTIONAL PEDALS
ALLARME INVERTER
INVERTER ALLARM
VELOCITÀ SELEZIONATA
SELECTED SPEED
LIVELLO OLIO OK
OIL LEVEL OK
SCORTA
SPARE
PEDAL CONTROL START
START PEDALIERA
BLADE GUARD CLOSE
RIPARO LAMA CHIUSO
BLADE PROXIMITY
PROXIMITY LAMA
ALIMENTAZIONE
24VCC
0VCC
C0
C1
C2
C3
C4
C5
C7
J5
M30-J5
-W38
-W32
-W27
-W118
-S50
-K7
-S0
-XSA
-XQG2
OLM
OPE
Fe
DM 13" 18" P - 480
INGRESSI MEP30
Mep30 inputs
Impianto
Denominazione
Ordine
Commessa
Esecutore
Bartoli
FOGLIO
12
ULTIMO
103
Dis. N.
DM
CAD
SPAC
File
DM1318P-480\1.DWG
Data
10-09-2009
R0.2
Mod. Lay-out Mep30 descrizioni e distinta IT-EN
22/03/2010
R0.1
Aggiunto fraguardatore laser e luce zona taglio
23/09/2009
REV.
MODIFICA
DATA
FIRME

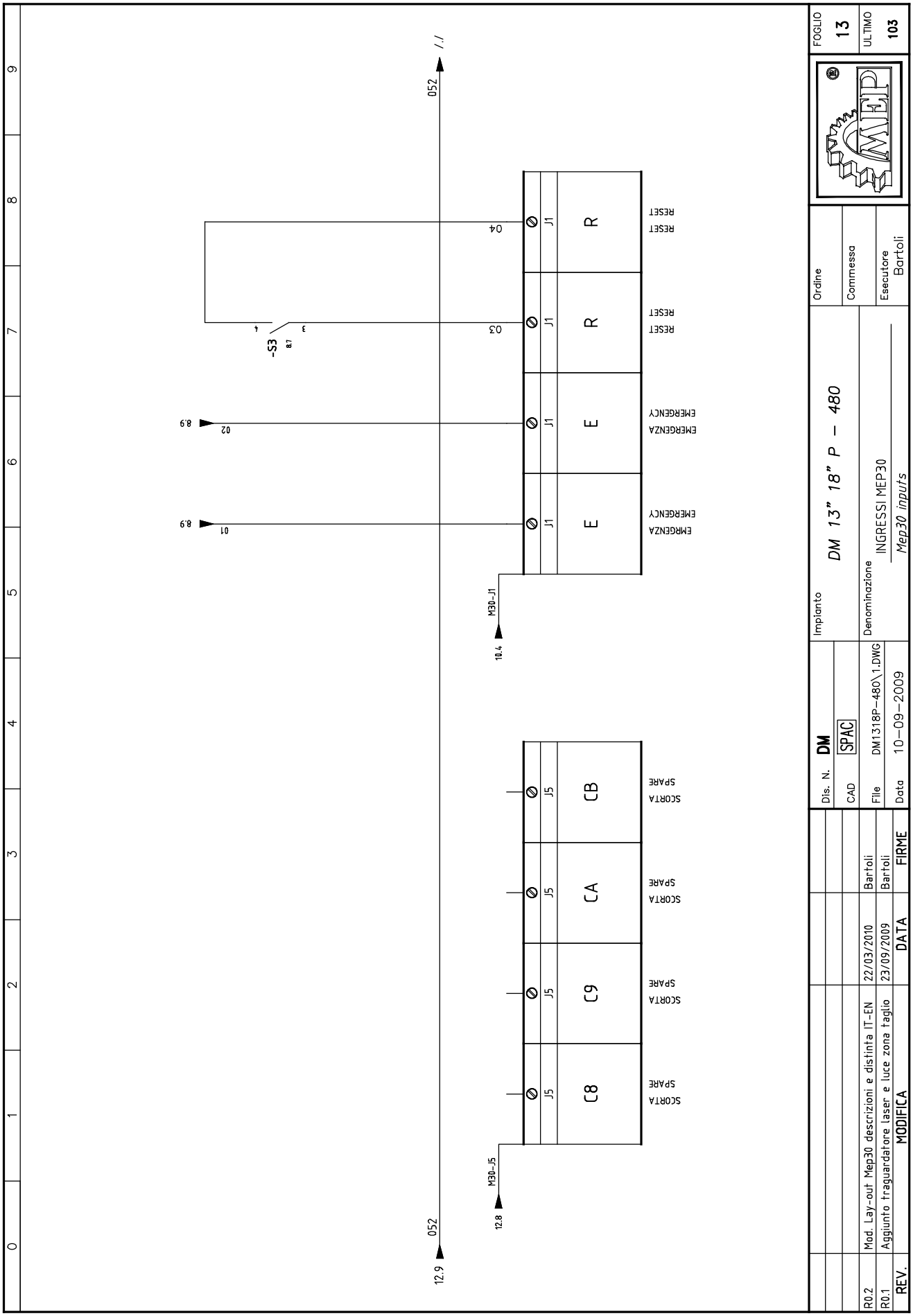
FOGLIO 13
ULTIMO 103
Ordine
Commessa
Esecutore Bartoli
Impianto
DM 13" 18" P – 480
Denominazione
INGRESSI MEP30
Mep30 inputs
Dis. N. DM
CAD SPAC
File DM1318P-480\1.DWG
Data 10-09-2009
M30-J1
M30-J5
EMRGENZA
EMERGENCY
RESET
SCORTA
SPARE
-S3
REV.
MODIFICA
DATA
FIRME
R0.2 Mod. Lay-out Mep30 descrizioni e distinta IT-EN 22/03/2010 Bartoli
R0.1 Aggiunto traguardatore laser e luce zona taglio 23/09/2009 Bartoli

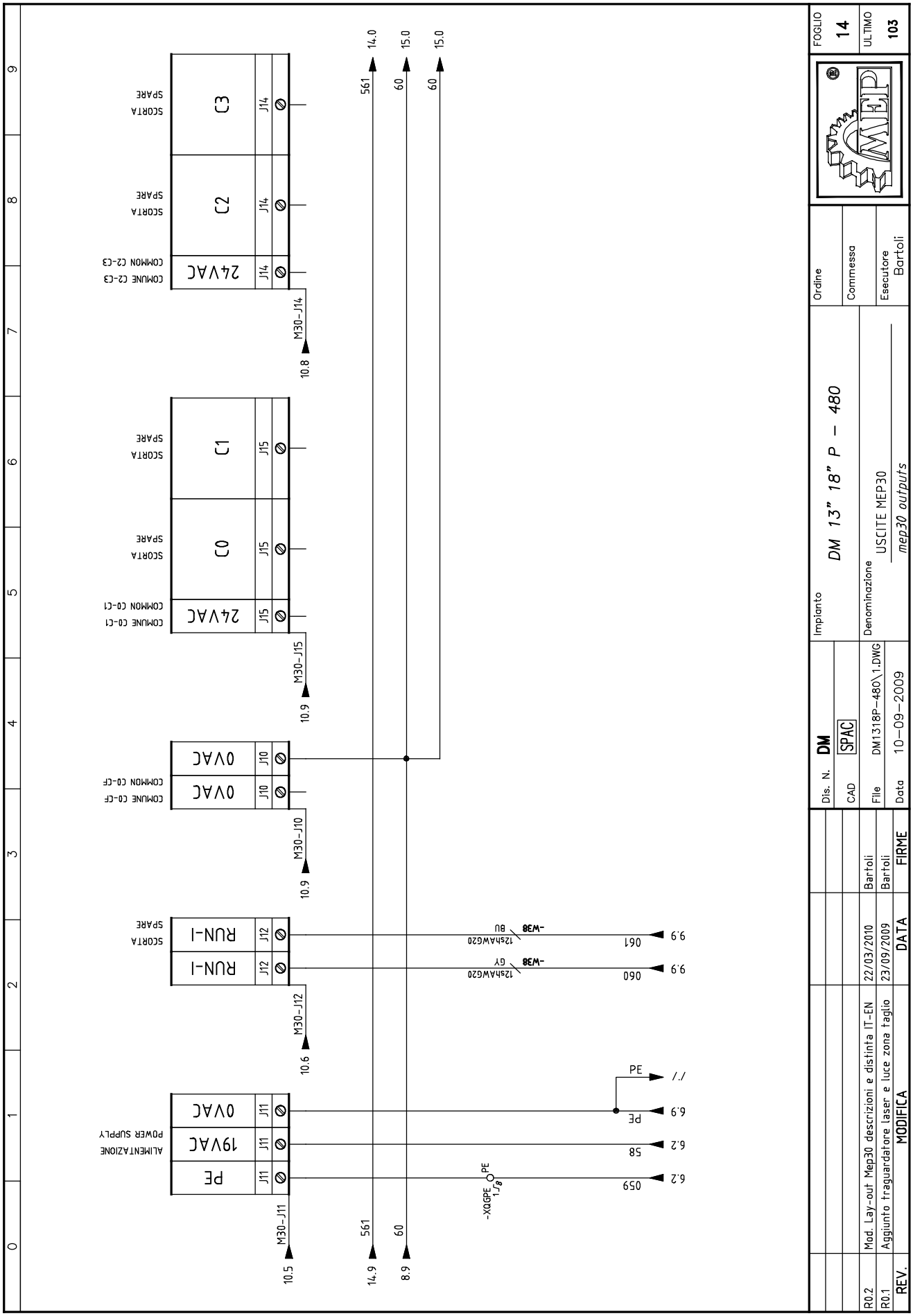
ALIMENTAZIONE
POWER SUPPLY
PE
19VAC
0VAC
J11
M30-J11
10.5
14.9
561
8.9
60
-XQGPE
1/8
PE
6.2
059
6.2
58
6.9
PE
./.
PE
10.6
M30-J12
RUN-I
RUN-I
J12
SCORTA
SPARE
9.9
060
9.9
061
-W38
125hAWG20
GY
-W38
125hAWG20
BU
10.9
M30-J10
0VAC
0VAC
J10
COMMON C0-CF
COMUNE C0-CF
10.9
M30-J15
24VAC
J15
C0
C1
COMMON C0-C1
COMUNE C0-C1
SCORTA
SPARE
10.8
M30-J14
24VAC
J14
C2
C3
COMMON C2-C3
COMUNE C2-C3
14.0
561
15.0
60
15.0
60
FOGLIO
14
ULTIMO
103
Ordine
Commessa
Esecutore
Bartoli
Impianto
DM 13" 18" P - 480
Denominazione
USCITE MEP30
mep30 outputs
Dis. N.
DM
CAD
SPAC
File
DM1318P-480\1.DWG
Data
10-09-2009
R0.2
Mod. Lay-out Mep30 descrizioni e distinta IT-EN
22/03/2010
Bartoli
R0.1
Aggiunto fraguardatore laser e luce zona taglio
23/09/2009
Bartoli
REV.
MODIFICA
DATA
FIRME

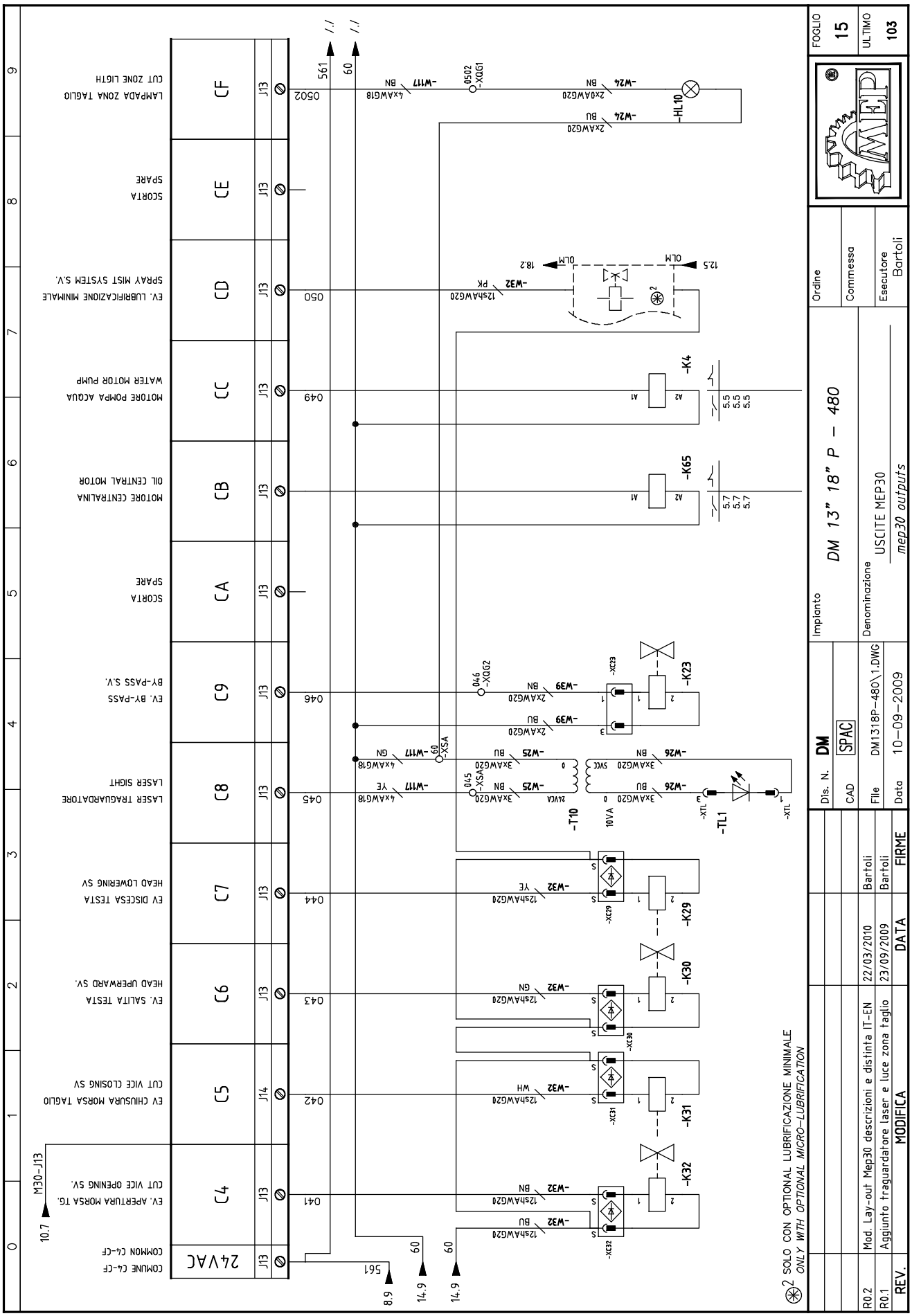
24VAC
COMUNE C4-CF
COMMON C4-CF
EV. APERTURA MORSA TG.
CUT VICE OPENING SV.
EV CHIUSURA MORSA TAGLIO
CUT VICE CLOSING SV
EV. SALITA TESTA
HEAD UPERWARD SV.
EV DISCESA TESTA
HEAD LOWERING SV
LASER TRAGUARDATORE
LASER SIGHT
EV. BY-PASS
BY-PASS S.V.
SCORTA
SPARE
MOTORE CENTRALINA
OIL CENTRAL MOTOR
MOTORE POMPA ACQUA
WATER MOTOR PUMP
EV. LUBRIFICAZIONE MINIMALE
SPRAY MIST SYSTEM S.V.
SCORTA
SPARE
LAMPADA ZONA TAGLIO
CUT ZONE LIGTH
-K32
-K31
-K30
-K29
-K23
-K65
-K4
-T10
-TL1
-HL10
SOLO CON OPTIONAL LUBRIFICAZIONE MINIMALE
ONLY WITH OPTIONAL MICRO-LUBRIFICATION
FOGLIO 15
ULTIMO 103
Impianto DM 13" 18" P - 480
Denominazione USCITE MEP30
mep30 outputs
Ordine
Commessa
Esecutore Bartoli
Dis. N. DM
CAD SPAC
File DM1318P-480\1.DWG
Data 10-09-2009
R0.2 Mod. Lay-out Mep30 descrizioni e distinta IT-EN 22/03/2010 Bartoli
R0.1 Aggiunto traguardatore laser e luce zona taglio 23/09/2009 Bartoli
REV. MODIFICA DATA FIRME

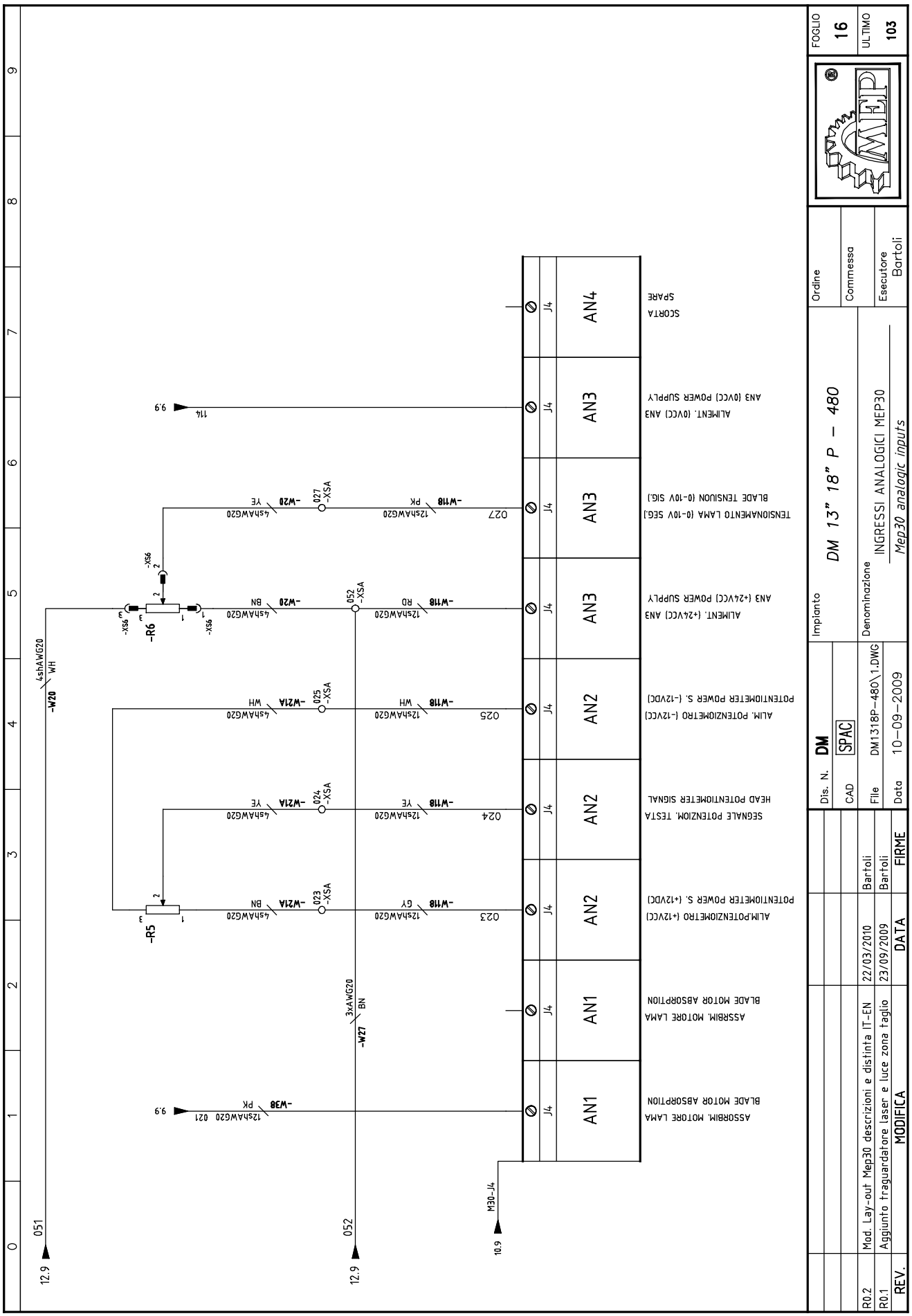
AN4
SCORTA
SPARE
AN3
ALIMENT. (0VCC) ANA
ANA (0VCC) POWER SUPPLY
AN3
TENSIONAMENTO LAMA (0-10V SEG.)
BLADE TENSIUON (0-10V SIG.)
AN3
ALIMENT. (+24VCC) ANA
ANA (+24VCC) POWER SUPPLY
AN2
ALIM. POTENZIOMETRO (-12VCC)
POTENTIOMETER POWER S. (-12VDC)
AN2
SEGNALE POTENZIOM. TESTA
HEAD POTENTIOMETER SIGNAL
AN2
ALIM.POTENZIOMETRO (+12VCC)
POTENTIOMETER POWER S. (+12VDC)
AN1
ASSRBIM. MOTORE LAMA
BLADE MOTOR ABSORPTION
AN1
ASSORBIM. MOTORE LAMA
BLADE MOTOR ABSORPTION
-W20
4shAWG20
WH
-W27
3xAWG20
BN
-W38
12SHAWG20
PK
-W18
12SHAWG20
-W21A
4SHAWG20
-R5
-R6
-XSA
-XSX
M30-J4
051
052
12.9
10.9
9.9
114
FOGLIO 16
ULTIMO 103
Ordine
Commessa
Esecutore Bartoli
Impianto
DM 13" 18" P – 480
Denominazione
INGRESSI ANALOGICI MEP30
Mep30 analogic inputs
Dis. N. DM
CAD SPAC
File DM1318P-480\1.DWG
Data 10-09-2009
R0.2 Mod. Lay-out Mep30 descrizioni e distinta IT-EN 22/03/2010 Bartoli
R0.1 Aggiunto fraguardatore laser e luce zona taglio 23/09/2009 Bartoli
REV. MODIFICA DATA FIRME

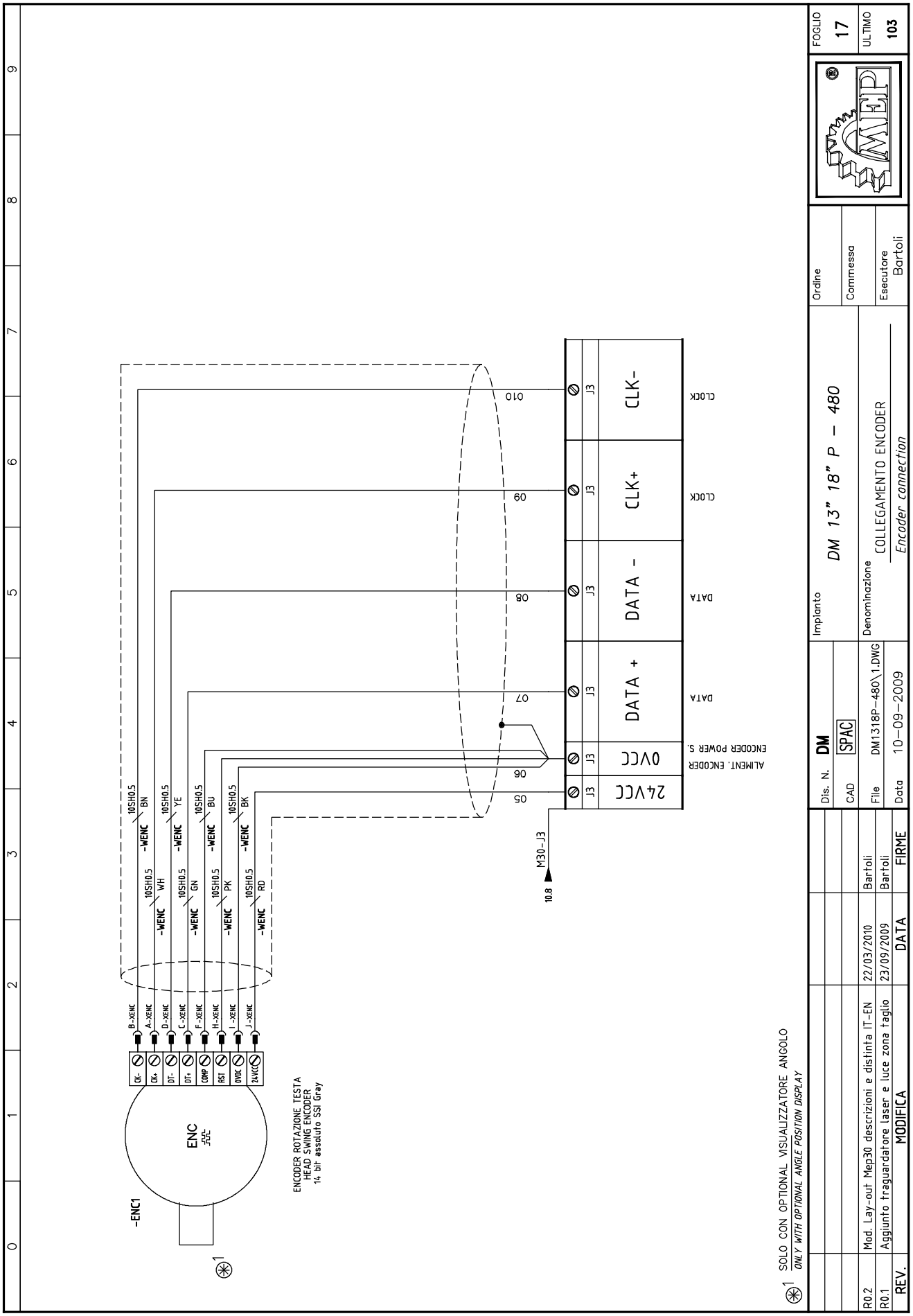
-ENC1
ENC
CK-
CK+
DT-
DT+
COMP
RST
0VDC
24VDC
B-XENC
A-XENC
D-XENC
C-XENC
F-XENC
H-XENC
I-XENC
J-XENC
ENCODER ROTAZIONE TESTA
HEAD SWING ENCODER
14 bit assoluto SSI Gray
-WENC
10SH0.5
BN
WH
YE
GN
BU
PK
BK
RD
M30-J3
10.8
05
06
07
08
09
010
24VCC
0VCC
DATA +
DATA -
CLK+
CLK-
J3
ALIMENT. ENCODER
ENCODER POWER S.
DATA
CLOCK
SOLO CON OPTIONAL VISUALIZZATORE ANGOLO
ONLY WITH OPTIONAL ANGLE POSITION DISPLAY
Dis. N. DM
CAD SPAC
File DM1318P-480\1.DWG
Data 10-09-2009
Impianto
DM 13" 18" P - 480
Denominazione
COLLEGAMENTO ENCODER
Encoder connection
Ordine
Commessa
Esecutore Bartoli
FOGLIO 17
ULTIMO 103
R0.2 Mod. Lay-out Mep30 descrizioni e distinta IT-EN 22/03/2010 Bartoli
R0.1 Aggiunto traguardatore laser e luce zona taglio 23/09/2009 Bartoli
REV. MODIFICA DATA FIRME

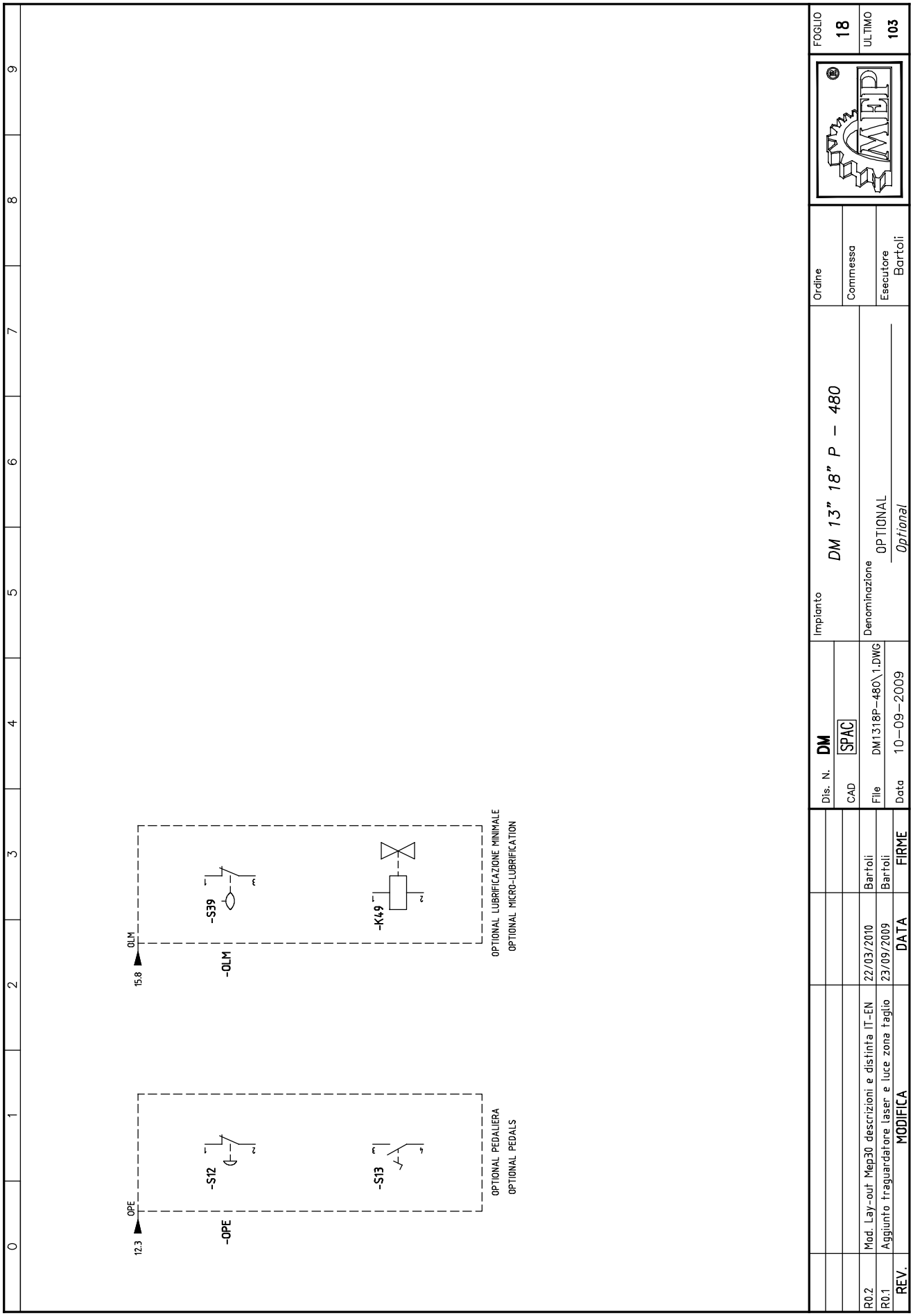
0
1
2
3
4
5
6
7
8
9
OPE
12.3
-OPE
-S12
-S13
OPTIONAL PEDALIERA
OPTIONAL PEDALS
OLM
15.8
-OLM
-S39
-K49
OPTIONAL LUBRIFICAZIONE MINIMALE
OPTIONAL MICRO-LUBRIFICATION
REV.
MODIFICA
DATA
FIRME
R0.2
Mod. Lay-out Mep30 descrizioni e distinta IT-EN
22/03/2010
Bartoli
R0.1
Aggiunto fraguardatore laser e luce zona taglio
23/09/2009
Bartoli
Dis. N.
DM
CAD
SPAC
File
DM1318P-480\1.DWG
Data
10-09-2009
Impianto
DM 13" 18" P - 480
Denominazione
OPTIONAL
Optional
Ordine
Commessa
Esecutore
Bartoli
FOGLIO
18
ULTIMO
103

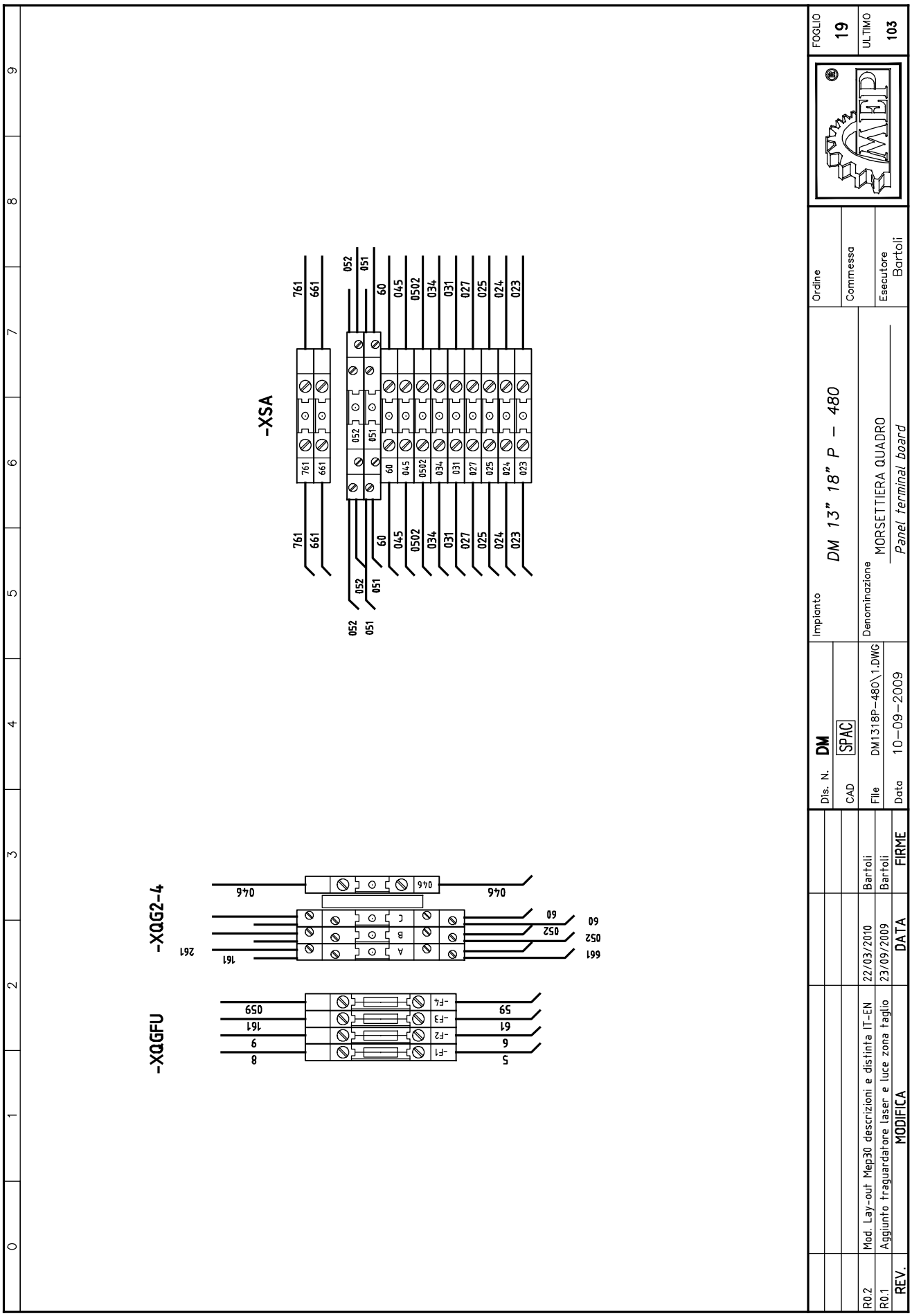
-XSA
761
661
052
051
60
045
0502
034
031
027
025
024
023
-XQG2-4
046
261
161
A
B
C
052
60
661
-XQGFU
-F1
-F2
-F3
-F4
8
9
161
059
5
6
61
59
Dis. N. DM
CAD SPAC
Impianto
DM 13" 18" P - 480
Denominazione
MORSETTIERA QUADRO
Panel terminal board
Ordine
Commessa
Esecutore Bartoli
FOGLIO 19
ULTIMO 103
File DM1318P-480\1.DWG
Data 10-09-2009
R0.2 Mod. Lay-out Mep30 descrizioni e distinta IT-EN 22/03/2010 Bartoli
R0.1 Aggiunto traguardatore laser e luce zona taglio 23/09/2009 Bartoli
REV. MODIFICA DATA FIRME

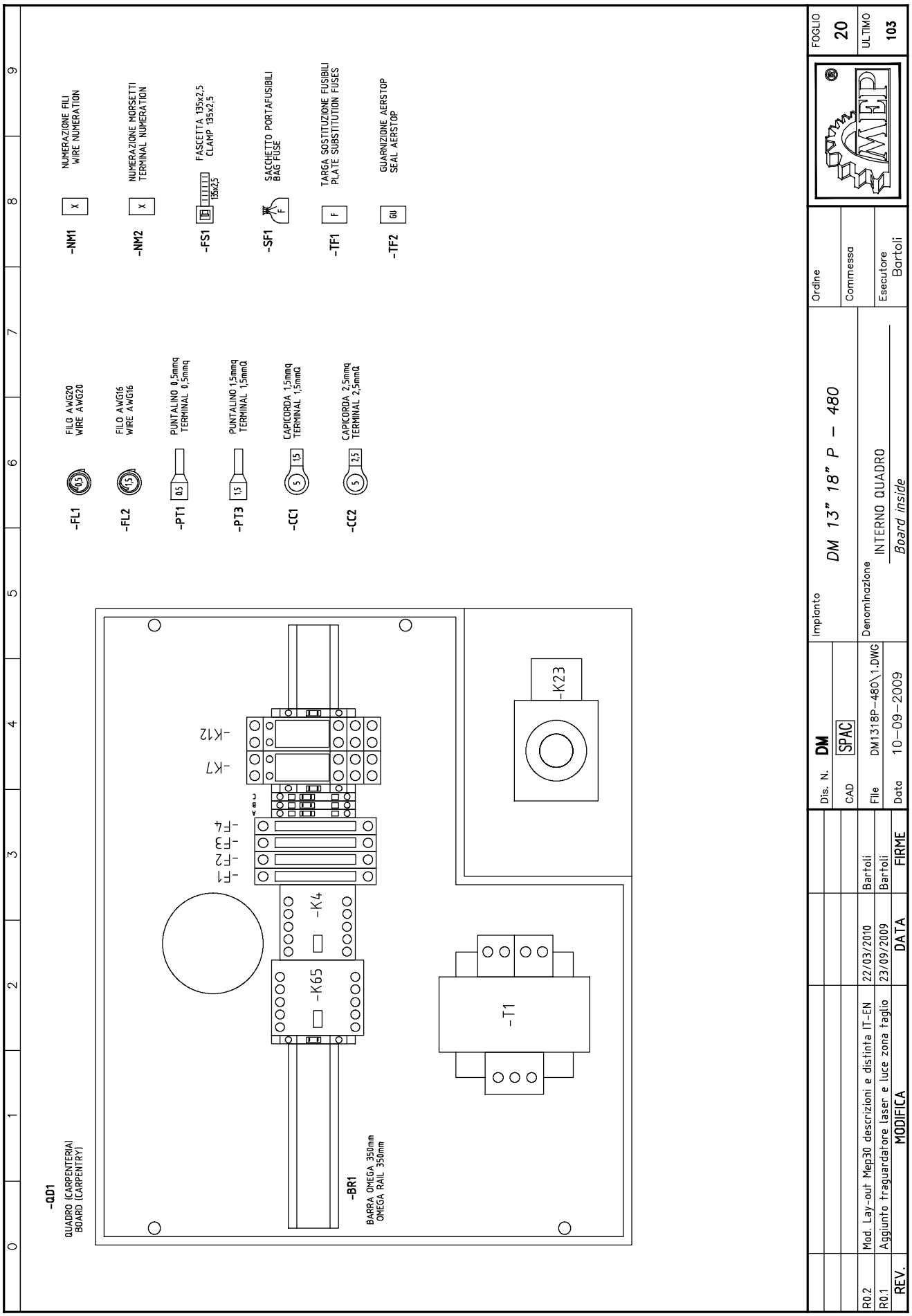
-QD1
QUADRO (CARPENTERIA)
BOARD (CARPENTRY)
-BR1
BARRA OMEGA 350mm
OMEGA RAIL 350mm
-K65
-K4
-K12
-K7
-F1
-F2
-F3
-F4
-T1
-K23
-FL1
FILO AWG20
WIRE AWG20
-FL2
FILO AWG16
WIRE AWG16
-PT1
PUNTALINO 0,5mmq
TERMINAL 0,5mmq
-PT3
PUNTALINO 1,5mmq
TERMINAL 1,5mmQ
-CC1
CAPICORDA 1,5mmq
TERMINAL 1,5mmQ
-CC2
CAPICORDA 2,5mmq
TERMINAL 2,5mmQ
-NM1
NUMERAZIONE FILI
WIRE NUMERATION
-NM2
NUMERAZIONE MORSETTI
TERMINAL NUMERATION
-FS1
FASCETTA 135x2,5
CLAMP 135x2,5
-SF1
SACCHETTO PORTAFUSIBILI
BAG FUSE
-TF1
TARGA SOSTITUZIONE FUSIBILI
PLATE SUBSTITUTION FUSES
-TF2
GUARNIZIONE AERSTOP
SEAL AERSTOP
Impianto
DM 13" 18" P – 480
Denominazione
INTERNO QUADRO
Board inside
Ordine
Commessa
Esecutore
Bartoli
Dis. N. DM
CAD SPAC
File DM1318P-480\1.DWG
Data 10-09-2009
FOGLIO 20
ULTIMO 103
R0.2 Mod. Lay-out Mep30 descrizioni e distinta IT-EN 22/03/2010 Bartoli
R0.1 Aggiunto fraguardatore laser e luce zona taglio 23/09/2009 Bartoli
REV. MODIFICA DATA FIRME

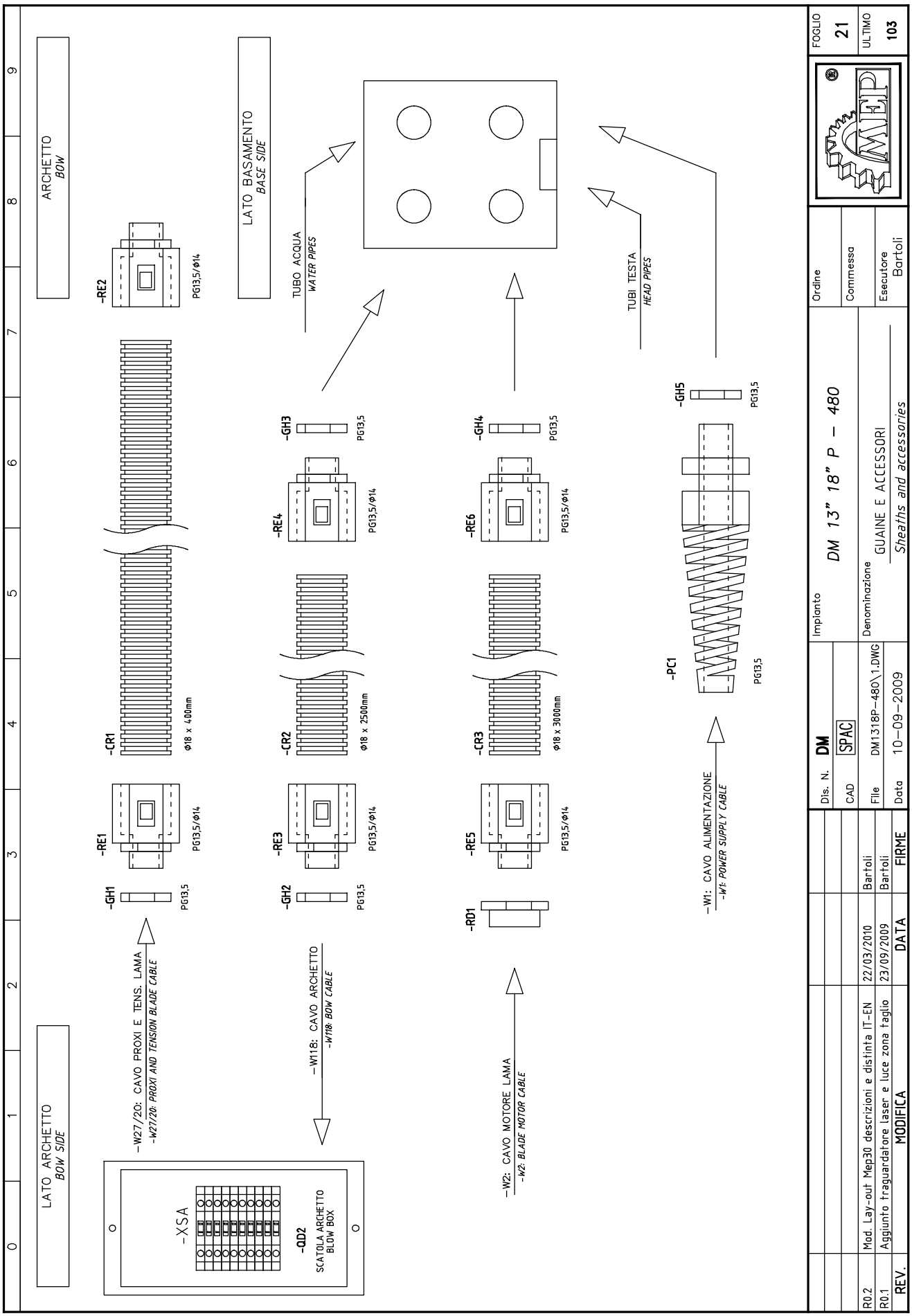
ARCHETTO
BOW
LATO BASAMENTO
BASE SIDE
LATO ARCHETTO
BOW SIDE
TUBO ACQUA
WATER PIPES
TUBI TESTA
HEAD PIPES
-RE2
PG13,5/Ø14
-GH3
PG13,5
-GH4
PG13,5
-GH5
PG13,5
-RE4
PG13,5/Ø14
-RE6
PG13,5/Ø14
-CR1
Ø18 x 400mm
-CR2
Ø18 x 2500mm
-CR3
Ø18 x 3000mm
-PC1
PG13,5
-RE1
PG13,5/Ø14
-RE3
PG13,5/Ø14
-RE5
PG13,5/Ø14
-GH1
PG13,5
-GH2
PG13,5
-RD1
-W27/20: CAVO PROXI E TENS. LAMA
-W27/20: PROXI AND TENSION BLADE CABLE
-W118: CAVO ARCHETTO
-W118: BOW CABLE
-W2: CAVO MOTORE LAMA
-W2: BLADE MOTOR CABLE
-W1: CAVO ALIMENTAZIONE
-W1: POWER SUPPLY CABLE
-XSA
-QD2
SCATOLA ARCHETTO
BLOW BOX
FOGLIO
21
ULTIMO
103
Ordine
Commessa
Esecutore
Bartoli
Impianto
DM 13" 18" P - 480
Denominazione
GUAINE E ACCESSORI
Sheaths and accessories
Dis. N.
DM
CAD
SPAC
File
DM1318P-480\1.DWG
Data
10-09-2009
REV.
MODIFICA
DATA
FIRME
R0.2
Mod. Lay-out Mep30 descrizioni e distinta IT-EN
22/03/2010
Bartoli
R0.1
Aggiunto traguardatore laser e luce zona taglio
23/09/2009
Bartoli

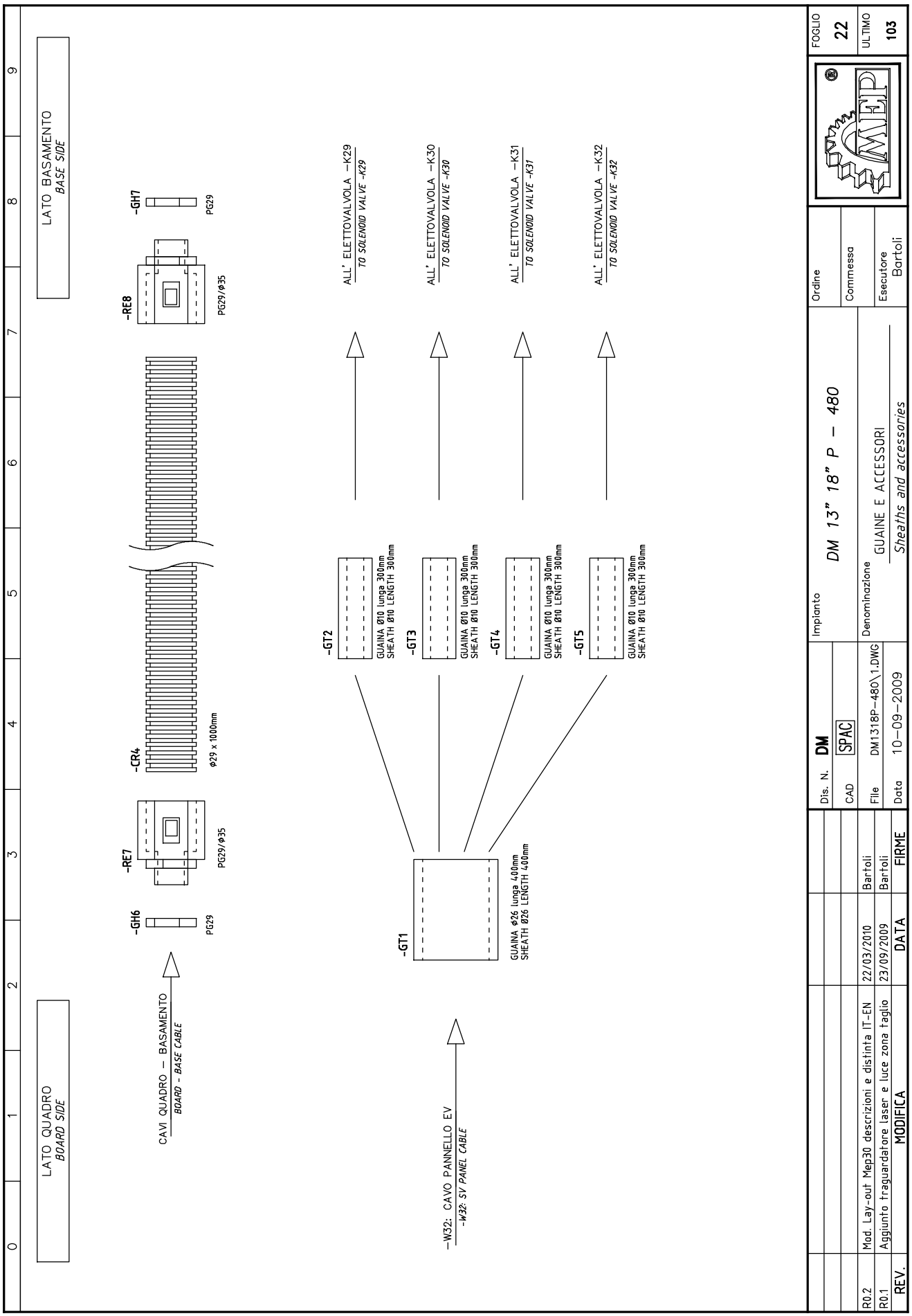
LATO QUADRO
BOARD SIDE
LATO BASAMENTO
BASE SIDE
CAVI QUADRO – BASAMENTO
BOARD - BASE CABLE
-GH6
PG29
-RE7
PG29/Ø35
-CR4
Ø29 x 1000mm
-RE8
PG29/Ø35
-GH7
PG29
-W32: CAVO PANNELLO EV
-W32: SV PANEL CABLE
-GT1
GUAINA Ø26 lunga 400mm
SHEATH Ø26 LENGTH 400mm
-GT2
GUAINA Ø10 lunga 300mm
SHEATH Ø10 LENGTH 300mm
ALL' ELETTOVALVOLA -K29
TO SOLENOID VALVE -K29
-GT3
GUAINA Ø10 lunga 300mm
SHEATH Ø10 LENGTH 300mm
ALL' ELETTOVALVOLA -K30
TO SOLENOID VALVE -K30
-GT4
GUAINA Ø10 lunga 300mm
SHEATH Ø10 LENGTH 300mm
ALL' ELETTOVALVOLA -K31
TO SOLENOID VALVE -K31
-GT5
GUAINA Ø10 lunga 300mm
SHEATH Ø10 LENGTH 300mm
ALL' ELETTOVALVOLA -K32
TO SOLENOID VALVE -K32
Dis. N. DM
CAD SPAC
File DM1318P-480\1.DWG
Data 10-09-2009
Impianto
DM 13" 18" P – 480
Denominazione
GUAINE E ACCESSORI
Sheaths and accessories
Ordine
Commessa
Esecutore Bartoli
FOGLIO 22
ULTIMO 103
R0.2 Mod. Lay-out Mep30 descrizioni e distinta IT-EN 22/03/2010 Bartoli
R0.1 Aggiunto fraguardatore laser e luce zona taglio 23/09/2009 Bartoli
REV. MODIFICA DATA FIRME

CAVI ESTERNI \ EXTERNAL CABLES

QUADRO \ BOARD									DESTINAZIONE \ LOCATION			
QUADRO BOARD	FOGLIO SHEET	NR. MORSETTO TERMINAL NO.	NR. FILO CONDUCTOR NO.	ID SUL CAVO ID IN CABLE	CAVO CABLE	LUNGHEZZA LENGHT [mt]	DISTURBO NOISE LEVEL	ID SUL CAVO ID IN CABLE	NR. FILO CONDUCTOR NO.	NR. MORSETTO TERMINAL NO.	FOGLIO SHEET	QUADRO BOARD
=QgCv -AL	4/1	L1 ○	L1	BN	-W1 022.0130 4GAWG16	4,5 MT		BN	L1	5	4/3	=QgCv -Q0
=QgCv -AL	4/1	L2 ○	L2	BK	Cavo alimentazione / Power supply cable			BK	L2	3	4/3	=QgCv -Q0
=QgCv -AL	4/1	L3 ○	L3	GY				GY	L3	1	4/3	=QgCv -Q0
=QgCv -AL	4/2	PE ○	PE	GNYE				GNYE	PE	⏚ 1_2	4/2	=QgCv -XQGPE
=SaCv -XSA	12/2	031 ○	031	BN	-W118 022.0170 12shAWG20	7.00Mt		BN	031	J5	12/2	C0
=BmCv -XSA	16/3	023 ○	023	GY	Cavo scatola archetto / Bow box cable			GY	023	J4	16/3	AN2
=SaCv -XSA	12/1	051 ○	051	BU				BU	051	J5	12/1	0VCC
=BmCv -XSA	12/4	762 ○	034	GN				GN	034	J5	12/4	C3
=BmCv -XSA	16/5	052 ○	052	RD				RD	052	J4	16/5	AN3
=BmCv -XSA	16/3	024 ○	024	YE				YE	024	J4	16/3	AN2
=BmCv -XSA	16/4	025 ○	025	WH				WH	025	J4	16/4	AN2
=BmCv -XSA	16/6	027 ○	027	PK				PK	027	J4	16/6	AN3
=BmCv -XSA	8/1	761 ○	761	BK				BK	761	A1	8/1	=QgCv -K7
				VT				VT				
				RD-BU				RD-BU				
=QgCv -XQG2	7/3	A ○	661	GY-PK				GY-PK	661	○ 661	8/1	=BmCv -XSA
=QgCv -U1	**5/2**	**U**	**024**	BK	-W2 022.0130 4GAWG16	5.00 MT		BK	024	U	5/1	=BmMep -M1
=QgCv -U1	**5/2**	**V**	**026**	BN	Cavo motore lama / Blade motor cable			BN	026	V	5/1	=BmMep -M1
=QgCv -U1	**5/2**	**W**	**028**	GY				GY	028	W	5/1	=BmMep -M1
=QgCv -XQGPE	4/2	1_3 ⏚	PE	GNYE				GNYE	PE	PE	5/2	=BmMep -M1
=QgCv -K4	**5/5**	**2**	**015**	BN	-W3 022.0225 4GAWG18	5.00 MT		BN	015	U	5/5	=BmMep -M2
=QgCv -K4	**5/5**	**4**	**016**	BK	Cavo pompa acqua / Water pump cable			BK	016	V	5/5	=BmMep -M2
=QgCv -K4	**5/5**	**6**	**017**	GY				GY	017	W	5/5	=BmMep -M2
=QgCv -XQGPE	4/2	1_5 ⏚	PE	GNYE				GNYE	PE	PE	5/6	=BmMep -M2
=BmCv -XSA	**15/3**	**0502**	**0502**	BN	-W117 022.0178 4ShAWG18	7.00 MT		BN	0502	J13	15/3	CF
=BmCv -XSA	**15/3**	**60**	**60**	GN	Cavo scatola archetto / Bow box cable			GN	60	C	8/8	=QgCv -XQG4
=BmCv -XSA	**15/3**	**045**	**045**	YE				YE	045	J13	15/3	C8
				WH				WH				

REV.	MODIFICA	DATA	FIRME
R0.2	Mod. Lay-out Mep30 descrizioni e distinta IT-EN	22/03/2010	Bartoli
R0.1	Aggiunto traguardatore laser e luce zona taglio	23/09/2009	Bartoli

Dis. N. **DM**
CAD SPAC
File DM1318P-480\1.DWG
Data 10-09-2009

Impianto: *DM 13" 18" P - 480*
Denominazione: RIASSUNTIVO CAVI
Cable summary

Ordine
Commessa
Esecutore: Bartoli

FOGLIO 23
ULTIMO 103

CAVI ESTERNI \ EXTERNAL CABLES

QUADRO \ BOARD									DESTINAZIONE \ LOCATION			
QUADRO BOARD	FOGLIO SHEET	NR. MORSETTO TERMINAL NO.	NR. FILO CONDUCTOR NO.	ID SUL CAVO ID IN CABLE	CAVO CABLE	LUNGHEZZA LENGHT [mt]	DISTURBO NOISE LEVEL	ID SUL CAVO ID IN CABLE	NR. FILO CONDUCTOR NO.	NR. MORSETTO TERMINAL NO.	FOGLIO SHEET	QUADRO BOARD
C4	15/0	J13	041	BN	-W32 022.0170 12shAWG20	4,50MT		BN	041		15/0	=BmCv
	8/3		361	GY	Cavo pannello EV e optional / S.v. panel and optional cable			GY	361	21	8/5	=QgCv -K7
=QgCv -XQG4	8/8	C ○	60	BU				BU	60		15/0	=BmCv
C6	15/2	J13	043	GN				GN	043		15/2	=BmCv
	12/3		052	RD				RD	052	○ 052	12/1	=BmCv -XQG2
C7	15/3	J13	044	YE				YE	044		15/3	=BmCv
C5	15/1	J14	042	WH				WH	042		15/1	=BmCv
CD	15/7	J13	050	PK				PK	050		15/7	
C5	12/6	J5	036	BK				BK	036		12/6	
	8/3		0361	VT				VT	0361	2	8/3	=QgCv -S4
				RD-BU				RD-BU				
C2	12/3	J5	033	GY-PK				GY-PK	033		12/3	
=QgCv	9/3		038	BN	-W38 022.0170 12shAWG20	4,5 MT		BN	038	J5	12/7	C7
=QgCv	9/3	B2	060	GY	Cavo comandi inverter / Inverter command cable			GY	060	J12	14/2	RUN-I
=QgCv	9/3	B4	061	BU				BU	061	J12	14/2	RUN-I
=QgCv -R3	9/6	3	116	GN				GN	116	10V	9/3	=QgCv
=QgCv	9/4		052	RD				RD	052	○ 052	12/1	=BmCv -XQG2
=QgCv -R3	9/7	1	114	YE				YE	114	0V	9/3	=QgCv
=QgCv -R3	9/7	2	115	WH				WH	115	A2	9/3	=QgCv
=QgCv	9/3	B1	021	PK				PK	021	J4	16/1	AN1
				BK				BK				
				VT				VT				
				RD-BU				RD-BU				
				GY-PK				GY-PK				
=QgCv -XQG2	15/4	046 ○	046	BN	-W39 022.0139 2xAWG20	1,5Mt		BN	046		15/4	=QG
=QgCv -XQG4	8/8	C ○	60	BU	Cavo coll. EV by-pass / S.v. by-pass cable			BU	60		15/4	=QG
=QgCv -K65	5/7	2	018	BN	-W4 022.0225 4GAWG18	5.00 Mt		BN	018	U	5/7	=BmMep -M3
=QgCv -K65	5/7	4	019	BK	Cavo centralina idraulica / Hydraulic oil unit cable			BK	019	V	5/7	=BmMep -M3
=QgCv -K65	5/7	6	020	GY				GY	020	W	5/7	=BmMep -M3
=QgCv -XQGPE	4/2	1_6 ⏍	PE	GNYE				GNYE	PE	PE	5/8	=BmMep -M3

REV.	MODIFICA	DATA	FIRME
R0.2	Mod. Lay-out Mep30 descrizioni e distinta IT-EN	22/03/2010	Bartoli
R0.1	Aggiunto traguardatore laser e luce zona taglio	23/09/2009	Bartoli

Dis. N. DM
CAD SPAC
File DM1318P-480\1.DWG
Data 10-09-2009

Impianto: DM 13" 18" P - 480
Denominazione: RIASSUNTIVO CAVI
Cable summary

Ordine
Commessa
Esecutore: Bartoli

FOGLIO 24
ULTIMO 103

CAVI ESTERNI \ EXTERNAL CABLES

QUADRO \ BOARD										DESTINAZIONE \ LOCATION			
QUADRO BOARD	FOGLIO SHEET	NR. MORSETTO TERMINAL NO.	NR. FILO CONDUCTOR NO.	ID SUL CAVO ID IN CABLE	CAVO CABLE	LUNGHEZZA LENGHT [mt]	DISTURBO NOISE LEVEL	ID SUL CAVO ID IN CABLE	NR. FILO CONDUCTOR NO.	NR. MORSETTO TERMINAL NO.	FOGLIO SHEET	QUADRO BOARD
=QgCv -XENC	17/2	J	05	RD	-WENC 022.0409 10SH0.5			RD	05	J3	17/3	24VCC
=QgCv -XENC	17/2	I	06	BK	Cavo encoder / Encoder cable			BK	06	J3	17/4	0VCC
=QgCv -XENC	17/2	H	68	PK				PK	68	J3	17/4	0VCC
=QgCv -XENC	17/2	F	66	BU				BU	66	J3	17/4	0VCC
=QgCv -XENC	17/2	D	08	YE				YE	08	J3	17/5	DATA -
=QgCv -XENC	17/2	C	07	GN				GN	07	J3	17/4	DATA +
=QgCv -XENC	17/2	B	010	BN				BN	010	J3	17/7	CLK-
=QgCv -XENC	17/2	A	09	WH				WH	09	J3	17/6	CLK+
=BmCv -XS6	16/5	1	023	BN	-W20 022.0136 4shAWG20	1.00Mt		BN	023	052	16/5	=BmCv -XSA
=BmCv -XS6	16/5	2	027	YE	Cavo tensionatore / Tensioner cable			YE	027	027	16/6	=BmCv -XSA
=BmCv -XS6	16/5	3	051	WH				WH	051	051	12/1	=SaCv -XSA
				GN				GN				
=BmCv -XS5	16/3	1	023	BN	-W21A 022.0136 4shAWG20	5.00Mt		BN	023	023	16/3	=BmCv -XSA
=BmCv -XS5	16/3	2	024	YE	Cavo potenziometro testa / Head potentiometer cable			YE	024	024	16/3	=BmCv -XSA
=BmCv -XS5	16/3	3	025	WH				WH	025	025	16/4	=BmCv -XSA
				GN				GN				
=BmCv -XSA	16/5	052	052	BN	-W27 022.0376 3x0.5	5.00 Mt		BN	052	1	12/1	=BmMep -XS0
=SaCv -XSA	12/2	031	031	BK	Cavo proximity / Proximity cable			BK	031	4	12/2	=BmMep -XS0
=SaCv -XSA	12/1	051	051	BU				BU	051	3	12/1	=BmMep -XS0
=BmCv -XSA	8/1	661	661	BN	-W55 022.0139 2xAWG20	1.50Mt		BN	661	21	8/1	=BmCv -S1
=BmCv -XSA	8/1	761	761	BU	Cavo coll. fc carter lama / L.s. blade protection cable			BU	761	22	8/1	=BmCv -S1
=BmCv -XSA	15/9	0502	0502	BN	-W24 022.0139 2xAWG20	1.50Mt		BN	0502	/	15/9	=BmMep -HL10
=BmCv -XSA	15/9	60	60	BU	Cavo coll. lampada zona taglio / Ligth cut zone cable			BU	60	/	15/9	=BmMep -HL10
=BmCv -XSA	15/3	045	045	BN	-W25 022.0139 2xAWG20	1.50Mt		BN	045	24VAC	15/3	=QgCv -T10
=BmCv -XSA	15/3	60	60	BU	Cavo alimentatore laser / Laser sight power supply cable			BU	60	0	15/3	=QgCv -T10
=QgCv -T10	15/3	5VCC	/	BN	-W26 022.0139 2xAWG20	1.50Mt		BN	/	1	15/3	=BmMEP -XTL
=QgCv -T10	15/3	0	/	BU	Cavo alimentatore laser / Laser sight power supply cable			BU	/	3	15/3	=BmMEP -XTL

REV.	MODIFICA	DATA	FIRME
R0.2	Mod. Lay-out Mep30 descrizioni e distinta IT-EN	22/03/2010	Bartoli
R0.1	Aggiunto traguardatore laser e luce zona taglio	23/09/2009	Bartoli

Dis. N. DM
CAD SPAC
File DM1318P-480\1.DWG
Data 10-09-2009

Impianto: DM 13" 18" P - 480
Denominazione: RIASSUNTIVO CAVI
Cable summary

Ordine
Commessa
Esecutore: Bartoli

FOGLIO 25
ULTIMO 103

0	1	2	3	4	5	6	7	8	9

NOME/ITEM	TIPO/TYPE	DESCRIZIONE/DESCRIPTION	QUADRO/BOARD	FG/SH	Q.TA/Q.TY
'-CR1	'022.2602	Guaina POLIFLEX NW 14-1200143 (corrugato diam. 18) - POLIFLEX COVERING NW 14-1200143	'=BmCv	21	0.40
'-CR2	'022.2602	Guaina POLIFLEX NW 14-1200143 (corrugato diam. 18) - POLIFLEX COVERING NW 14-1200143	'=BmCv	21	2.50
'-CR3	'022.2602	Guaina POLIFLEX NW 14-1200143 (corrugato diam. 18) - POLIFLEX COVERING NW 14-1200143	'=BmCv	21	3.00
'-CR4	'022.0197	Guaina POLIFLEX NW 29-3800296 (corrugato diam. 35) - SHEATH NW 29-1200291	'=BmCv	22	1.00
'-GH1	'022.0244	Dado grigio PG13,5 - LOCK NUT 3217B GREY PG 13,5	'=BmCv	21	1
'-GH2	'022.0244	Dado grigio PG13,5 - LOCK NUT 3217B GREY PG 13,5	'=BmCv	21	1
'-GH3	'022.0244	Dado grigio PG13,5 - LOCK NUT 3217B GREY PG 13,5	'=BmCv	21	1
'-GH4	'022.0244	Dado grigio PG13,5 - LOCK NUT 3217B GREY PG 13,5	'=BmCv	21	1
'-GH5	'022.0244	Dado grigio PG13,5 - LOCK NUT 3217B GREY PG 13,5	'=BmCv	21	1
'-GH6	'022.0247	Dado poliammide PG29 - POLYAMIDE HUMMEL NUT 1.262.2900.11	'=BmCv	22	1
'-GH7	'022.0247	Dado poliammide PG29 - POLYAMIDE HUMMEL NUT 1.262.2900.11	'=BmCv	22	1
'-GT1	'022.0180	Guaina termoretraibile 26mm - COVERING MM 26	'=BmCv	22	0.40
'-GT2	'022.0181	Guaina termoretraibile 10mm - COVERING MM 10	'=BmCv	22	0.30
'-GT3	'022.0181	Guaina termoretraibile 10mm - COVERING MM 10	'=BmCv	22	0.30
'-GT4	'022.0181	Guaina termoretraibile 10mm - COVERING MM 10	'=BmCv	22	0.30
'-GT5	'022.0181	Guaina termoretraibile 10mm - COVERING MM 10	'=BmCv	22	0.30
'-PC1	'022.0234	Pressacordone 3246 nero PG13,5 - ORD PRESSER 3246 BLACK PG13.5	'=BmCv	21	1
'-RD1	'022.0349	Riduzione M/F M20/PG13,5 - ADAPTER M20-FEMM.PG 13,5 X FOR KEY BACK STOP	'=BmCv	21	1
'-RE1	'022.0211	Raccordo rapido dritto SEM PG13,5/Ø19 - RAPID JOINT SEM PG 13,5	'=BmCv	21	1
'-RE2	'022.0211	Raccordo rapido dritto SEM PG13,5/Ø19 - RAPID JOINT SEM PG 13,5	'=BmCv	21	1
'-RE3	'022.0211	Raccordo rapido dritto SEM PG13,5/Ø19 - RAPID JOINT SEM PG 13,5	'=BmCv	21	1
'-RE4	'022.0211	Raccordo rapido dritto SEM PG13,5/Ø19 - RAPID JOINT SEM PG 13,5	'=BmCv	21	1
'-RE5	'022.0211	Raccordo rapido dritto SEM PG13,5/Ø19 - RAPID JOINT SEM PG 13,5	'=BmCv	21	1
'-RE6	'022.0211	Raccordo rapido dritto SEM PG13,5/Ø19 - RAPID JOINT SEM PG 13,5	'=BmCv	21	1
'-RE7	'022.0209	Raccordo rapido dritto SEM PG29/Ø35 - RAPID JOINT SEM 29	'=BmCv	22	1
'-RE8	'022.0209	Raccordo rapido dritto SEM PG29/Ø35 - RAPID JOINT SEM 29	'=BmCv	22	1
'-S1	'022.0037	Finecorsa di sicurezza con chiave 1NO + 1NC - FR 690 SH SAFETY SWITCH	'=BmCv	8	1
'-XC23	'022.0412	Connettore per EV con led per EV. AC - CONNECTOR F.REGENERATOR VALVE COIL	'=BmCv	15	1
'-XC29	'022.0378	Connettore per EV con ponte raddrizzatore e led - CONNECTOR F.REGENERATOR VALVE COIL	'=BmCv	15	1
'-XC30	'022.0378	Connettore per EV con ponte raddrizzatore e led - CONNECTOR F.REGENERATOR VALVE COIL	'=BmCv	15	1
'-XC31	'022.0378	Connettore per EV con ponte raddrizzatore e led - CONNECTOR F.REGENERATOR VALVE COIL	'=BmCv	15	1
'-XC32	'022.0378	Connettore per EV con ponte raddrizzatore e led - CONNECTOR F.REGENERATOR VALVE COIL	'=BmCv	15	1
'-XS6	'022.0378	Connettore AC 3 poli per valvola DC - CONNECTOR F.REGENERATOR VALVE COIL	'=BmCv	16	1
'-OLM	'090.1601	Gruppo lubrificazione munimale SHARK - SPRAY MIST SYSTEM SHARK	'=BmLmCv	18	1
'-HL10	'022.0346	Lampada 35W 24V Ø30 3000K vetro alogena - HALOGEN LAMP 35W 24V Ø30 3000K GLASS	'=BmMep	15	1
'-M1	'019.3623	KW1,5 M90L4P.B14 V.240-415 SH 452 - KW 1,5 M90L4P.B14 V.240-415.60 UL-CSA CERTIFICATE	'=BmMep	5	1

REV.	MODIFICA	DATA	FIRME
R0.2	Mod. Lay-out Mep30 descrizioni e distinta IT-EN	22/03/2010	Bartoli
R0.1	Aggiunto traguardatore laser e luce zona taglio	23/09/2009	Bartoli

Dis. N. DM
CAD SPAC
File DM1318P-480\1.DWG
Data 10-09-2009

Impianto: DM 13" 18" P - 480
Denominazione: DISTINTA MATERIALI
Material list

Ordine
Commessa
Esecutore: Bartoli

FOGLIO 26
ULTIMO 103

0	1	2	3	4	5	6	7	8	9

NOME/ITEM	TIPO/TYPE	DESCRIZIONE/DESCRIPTION	QUADRO/BOARD	FG/SH	Q.TA/Q.TY
'-M2	'028.0236	Elettropompa SAP PA150/120 trifase KW 0.20 3420Rpm 50/60Hz - 3-PH ELECTROPUMP PA150/120	'=BmMep	5	1
'-M3	'019.4006	Motore da 0,5Hp C71 B14 V230-415-50Hz / V240-480-60Hz - MOTOR HYDR. POWER PACK HP 0,5 C71IR	'=BmMep	5	1
'-R5	'022.0046	Potenziometro da 2K2 per testa - 6639S-001-202 POTENTIOMETER SH SX	'=BmMep	16	1
'-R6	'022.2152	Tensionatore elettronico Deltateck TR-S-A/3,5T 4V- 2800Kg - ELECTRONIC TENSIONER TRSA/3T.00	'=BmMep	16	1
'-TL1	'022.0513	Traguardatore laser - LASER'EMTTER 4/6V. X SH 500	'=BmMep	15	1
'-S0	'022.0523	Sensore di prossimita NPN per CNC FE - PROXIMITY NPN CNCFE	'=BmMep	12	1
'-XS0	'022.0376	Connettore 3 poli per prossimity F303N5000 - CONNECTOR F303N5000 FOR PROXIMITY	'=BmMep	12	1
'-OPE	'090.0672	Comando supplementare a pedaliera - FOOT-PEDAL DEVICE N.S. TI-CB-SHAX/I-CNC	'=BmPeMep	18	1
'-ENC1	'022.1316	Encoder assoluto 14 bit AS5814/GA-6-ER LIKA - ENCODER SSI AS5814/GA-6-ER	'=BmViAn	17	1
'-K23	V.d.Id.	Vedi distinta idraulica - SEE HYDRAULIC LIST	'=CeIdCv	15	1
'-K29	V.d.Id.	Vedi distinta idraulica - SEE HYDRAULIC LIST	'=CeIdCv	15	1
'-K30	V.d.Id.	Vedi distinta idraulica - SEE HYDRAULIC LIST	'=CeIdCv	15	1
'-K31	V.d.Id.	Vedi distinta idraulica - SEE HYDRAULIC LIST	'=CeIdCv	15	1
'-K32	V.d.Id.	Vedi distinta idraulica - SEE HYDRAULIC LIST	'=CeIdCv	15	1
'-BR1	'022.0900	Barra omega - OMEGA 3 GUIDE	'=QgCv	20	0.40
'-CC1	'022.0304	Terminale a occhiello Ø5 da 1,5mmq (Rosso) - WIRE TERMINAL CONNECT.A 5/P-B15/P	'=QgCv	20	14
'-CC2	'022.0296	Terminale a occhiello Ø5 da 2,5mmq (Blu) - WIRE TERMINAL CONNEC.S 2,5 MMQ GROMMET F 5 BF-M5	'=QgCv	20	1
'-FL1	'022.0171	Cordicella unipolare 1 X 0,5 - UNI-POLAR STRING 1X0,50	'=QgCv	20	16.70
'-FL2	'022.0172	Cordicella unipolare 1x1,50 - UNI-POLAR STRING 1X1,50	'=QgCv	20	56.00
'-FS1	'019.5353	Fascetta in plastica 135x2,5 - LEGRAND CLAMP ART.32031 140X3,5	'=QgCv	20	50
'-K0	'022.0556	Sganciatore U-PKZO V.48060 - RELEASER U-PKZ0 V.480.60	'=QgCv	4	1
'-K4	'022.3004	Minicontattore 9 AMP. - DILEM-10 (24V.50.60 HZ) cod. 21417 - MINI CONTACTOR 9 AMP	'=QgCv	15	1
'-K7	022.0994 + 022.2391	Rele 24VAC - 2 contatti scambio + zoccolo - Rele 24VAC - 2 CHANGE CONTACTS + SOCKET	'=QgCv	8	1
'-K12	022.0994 + 022.2391	Rele 24VAC - 2 contatti scambio + zoccolo - Rele 24VAC - 2 CHANGE CONTACTS + SOCKET	'=QgCv	8	1
'-K65	'022.3004	Minicontattore 9 AMP. - DILEM-10 (24V.50.60 HZ) cod. 21417 - MINI CONTACTOR 9 AMP	'=QgCv	15	1
'-NM1	'022.0290	Etichetta segnafilo - CABLE MARKER AND WIRES	'=QgCv	20	496
'-NM2	'022.0290	Etichetta per morsettiera - CABLE MARKER AND WIRES	'=QgCv	20	20
'-PT1	'022.0311	Terminale a puntale da 0,5mmq (Bianco) - CONNECTION TERMINAL DZ5CE005	'=QgCv	20	134
'-PT3	'022.0312	Terminale a puntale da 1,5mmq (Nero) - CONNECTION TERMINAL DZ5CE015	'=QgCv	20	70
'-Q0	'022.0124	Custodia isolante E-PKZO-GR con manopola rossa - HOUSING W.RED HANDLE	'=QgCv	4	1
'-Q0	'022.0125	Blocco luchettabile SBV-PKZO-E cod.35127 - LOCKABLE BLOCK	'=QgCv	4	1
'-Q0	'022.1287	Interuttore PKZM0-10 (termica) cod. 72739 Moeller - SWITCH PKZM0-10 (THERMAL)	'=QgCv	4	1
'-QD1	'016.0714	Quadro comandi SH SXI orizzontale - CONTROL PANEL SH SXI N.S.	'=QgCv	20	1
'-R3	'022.0045	Potenziometro 10K - POTENTIOMETER 10 K.	'=QgCv	9	1
'-R3	'034.1166	Manopola per comando potenziometro 22mm - KNOB 22 MM F. POTENTIOMETER	'=QgCv	9	1
'-S3	'022.1406	Pulsante M22-D-Y cod. 216598 + M22-A cod 216374 - BUTTON M22-D-Y COD.216598	'=QgCv	8	1

REV.	MODIFICA	DATA	FIRME
R0.2	Mod. Lay-out Mep30 descrizioni e distinta IT-EN	22/03/2010	Bartoli
R0.1	Aggiunto traguardatore laser e luce zona taglio	23/09/2009	Bartoli

Dis. N. DM
CAD SPAC
File DM1318P-480\1.DWG
Data 10-09-2009

Impianto: DM 13" 18" P - 480

Denominazione: DISTINTA MATERIALI
Material list

Ordine
Commessa
Esecutore: Bartoli

FOGLIO 27
ULTIMO 103

0	1	2	3	4	5	6	7	8	9

NOME/ITEM	TIPO/TYPE	DESCRIZIONE/DESCRIPTION	QUADRO/BOARD	FG/SH	Q.TA/Q.TY
'-S3	'022.0937	Blocchetto NA M22-K10 cod. 216376 - NORMALLY OPEN CONTACT	'=QgCv	8	1
'-S3	'022.0937	Blocchetto NA M22-K10 cod. 216376 - NORMALLY OPEN CONTACT	'=QgCv	8	1
'-S4	'022.1245	Emergenza M22-PVT cod.263467 + M22-A 216374 + M22-K01 216378 - EMERGENCY SWITCH M22-PVT COD.26346+M22- A 216374+M22-K01 216378	'=QgCv	8	1
'-S50	'022.3053	Selettore 2 velocita 16A T0-2-8900 - 1 SPEED SWITCH .16 AMP.TO-2-8900 E COD.207398	'=QgCv	12	1
'-SF1	'047.0182	Sacchetto portafusibili - PRINTED ENVELOPES	'=QgCv	20	1
'-SF1	'022.1133	Microfusibile T 1AMP. 250V - FUSE T 1AMP. 250V. M 18-20-23	'=QgCv	20	1
'-T1	'022.1671	Trasformatore 100VA V.240-480 S0.24 S0.19 - TRANS.30+70W 0-208-575.60HZ V.0-24.60HZ	'=QgCv	6	1
'-T10	'022.0512	Trasformatore 5W 24VAC/5vcc lasertec AL12 - TRANS 5W DC-LASER TEC AL12- 24AC/5 DC CABLE 50CM	'=QgCv	15	1
'-TF1	'031.2622	Targa sostituzione fusibili - REPLACE FUSE ADHESIVE SIGN	'=QgCv	20	1
'-TF2	'025.0604	Guarnizione aerstop - CONTROL PANEL GASKET	'=QgCv	20	2.10
'-U1	'054.4562	Inverter 400V 5KW FR-E740-170NA MITSUBISHI - INVERTER 400V 5KW FR-E740-170NA MITSUBISHI	'=QgCv	5	1
'-UDY	'022.0757	Display MEP30 LCD 2x16 - DISPLAY MEP 30	'=QgCv	10	1
'-UPC	'022.2818	Controllore MEP 30/B con rele - MEP 32 /B CONTROLLER FOR NC EVO	'=QgCv	10	1
'-UTA	'031.2013	Consolle di programmazione DM1318P - PROGRAMMING CONSOLLE DM13/18P	'=QgCv	10	1
'-XENC	'022.0409	EC-M10F-LK-A8-5 - COMPLETE CONNECT WITH 5 M CABLE EC-M 10 -LK-A8-5 FOR NCODER	'=QgCv	17	1
'-XQG2	'022.2258	Morsetto da 2.5 mm singolo per 4 fili a molla 56.703.5155.0 - QUADRUPLE POLE SPRING TERMINAL 56.703.5155.0	'=QgCv	7	1
'-XQG2	'022.2256	Morsetto da 2.5 mm singolo per 2 fili a molla 56.703.0055.0 - SINGLE POLE SPRING TERMINAL 56.703.0055.0	'=QgCv	15	1
'-XQG2	'022.2258	Morsetto da 2.5 mm singolo per 4 fili a molla 56.703.5155.0 - QUADRUPLE POLE SPRING TERMINAL 56.703.5155.0	'=QgCv	12	1
'-XQG4	'022.2258	Morsetto da 2.5 mm singolo per 4 fili a molla 56.703.5155.0 - QUADRUPLE POLE SPRING TERMINAL 56.703.5155.0	'=QgCv	8	1
'-XQG4	'022.2288	Piastra di chiusura x morsetto a 4 fili 07.312.7155.0 - CLOSING PLATE 07.312.7155.0	'=QgCv		1
'-XQGFU	022.2256 + 022.1136 + 022.1136	Morsetto portafusibile a molla + N° 2 fusibili da 500V 5A - FUSE CARRIER WITH SPRING + NR.2 FUSE 500V 5A	'=QgCv	6	2
'-XQGFU	022.2253 + 022.1140 + 022.1140	Portafusibile PCH 10.3x38 690V ITALWEBER + N° 2 fusibili da 500V 3A - FUSE CARRIER PCH 10.3x38 690V ITALWEBER + NR.2 FUSE 500V 3A	'=QgCv	6	2
'-XQGPE	'022.0377	Morsetto PE da 2.5 mm singolo per 2 fili a molla WK4 SLU - TERMINAL 8 WA 1011- 1PF00 EARTH	'=QgCv	4	1
'-XQGPE	'022.2247	Morsetto PE da 2.5 mm singolo per 4 fili a molla WK4 D2/2 SLU - WPE 1,5 ZZ FIXED GROUND TERMINAL	'=QgCv	6	1
'-XSA	'022.2256	Morsetto da 2.5 mm singolo per 2 fili a molla 56.703.0055.0 - SINGLE POLE SPRING TERMINAL 56.703.0055.0	'=SaCv	12	2
'-XSA	'022.2256	Morsetto da 2.5 mm singolo per 2 fili a molla 56.703.0055.0 - SINGLE POLE SPRING TERMINAL 56.703.0055.0	'=SaCv	8	6
'-XSA	'022.2256	Morsetto da 2.5 mm singolo per 2 fili a molla 56.703.0055.0 - SINGLE POLE SPRING TERMINAL 56.703.0055.0	'=SaCv	15	3
'-XSA	'022.2258	Morsetto da 2.5 mm singolo per 4 fili a molla 56.703.5155.0 - QUADRUPLE POLE SPRING TERMINAL 56.703.5155.0	'=SaCv	16	2
'-QD2	'011.1196	Scatola derivazione metallica 240x80x70 - METAL JUNCTION BOX 240X80X70	'=SaCv	21	1

REV.	MODIFICA	DATA	FIRME
R0.2	Mod. Lay-out Mep30 descrizioni e distinta IT-EN	22/03/2010	Bartoli
R0.1	Aggiunto traguardatore laser e luce zona taglio	23/09/2009	Bartoli

Dis. N. DM
CAD SPAC
File DM1318P-480\1.DWG
Data 10-09-2009

Impianto: DM 13" 18" P - 480
Denominazione: DISTINTA MATERIALI
Material list

Ordine
Commessa
Esecutore: Bartoli

FOGLIO 28
ULTIMO 103

Tipo/Type	Formaz./Format.	Descrizione/Description	Diam./Diam.	Lungh./Lenght
022.0136	4shAWG20	Cavo schermato per potenziometro / Shield cable for potentiometer	5	6.00
022.0170	12shAWG20	Cavo 12xAWG20 schermato / Shield cable 12xAWG20	10	16.00
022.0130	4gAWG16	Cavo 4xAWG16 / Cable 4xAWG16	10	9.50
022.0139	2xAWG20	Cavo 2xAWG20 / Cable 2xAWG20	4	7.50
022.0225	4gAWG18	Cavo 4xAWG18 / Cable 4xAWG18	8	10.00
022.0376	3x0.5	Cavo pressofuso con connettore M12 / Cable with connector M12	4	5.00
022.0409	10SH0.5	Cavo encoder 10x0,5 sch. con connettore / Encoder shield cable 10x0,5 with connector	9	5.00
022.0178	4shAWG18	Cavo 4xAWG20 schermato / Shield cable 4xAWG18	10	7.00

REV.	MODIFICA	DATA	FIRME
R0.2	Mod. Lay-out Mep30 descrizioni e distinta IT-EN	22/03/2010	Bartoli
R0.1	Aggiunto traguardatore laser e luce zona taglio	23/09/2009	Bartoli

Dis. N. DM
CAD SPAC
File DM1318P-480\1.DWG
Data 10-09-2009

Impianto: DM 13" 18" P - 480
Denominazione: DISTINTA MATERIALI
Material list

Ordine
Commessa
Esecutore: Bartoli

FOGLIO 29
ULTIMO 103

Sim.\Sym.	File	Descrizione\Description
	POMPAID	Pompa idraulica *Hydraulic pump*
	BLK106	Raccordo idraulico *Pipe fitting*
	FFLH53	Valvola riduttrice *Reducing valve*
	FFLH97	Elettovalvola direz. 4/3 elettroidr. *Double-acting solenoid valve 4/3*
	FFLP42	Manometro *Gauge*
	FFLP53	Motore elettrico *Electric motor*
	FFLP62B	Valvola di blocco *Check valve*
	FFLP75A	Cilindro a doppio effetto *Double-acting cylinder*
	FILTROID	Filtro aspirazione *Suction filter*
	NIPPLO-FOR	Raccordo idraulico a flusso ridotto *Reduced flow pipe fitting*
	GIU_POM	Giunto meccanico asse pompa *Pump axis coupling*

Sim.\Sym.	File	Descrizione\Description
	REG_FLU	Regolatore di flusso con by-pass elettrico *Flow regulator with electric by-pass*

Sim.\Sym.	File	Descrizione\Description

REV.	MODIFICA	DATA	FIRME
R0.3	Mod.lunghezza tubi idraulici + modifica manifold (-MF2)	18/06/2014	Solfanelli
R0.2	Mod. descrizioni distinta IT-EN	22/03/2010	Bartoli

Dis. N. DM
CAD SPAC
File DM1318P-480\2.DWG
Data 10-09-2009

Impianto: DM 13" 18" P
Denominazione: LISTA SIMBOLI
Simbol key

Ordine
Commessa
Esecutore: Bartoli

FOGLIO 100
ULTIMO 106

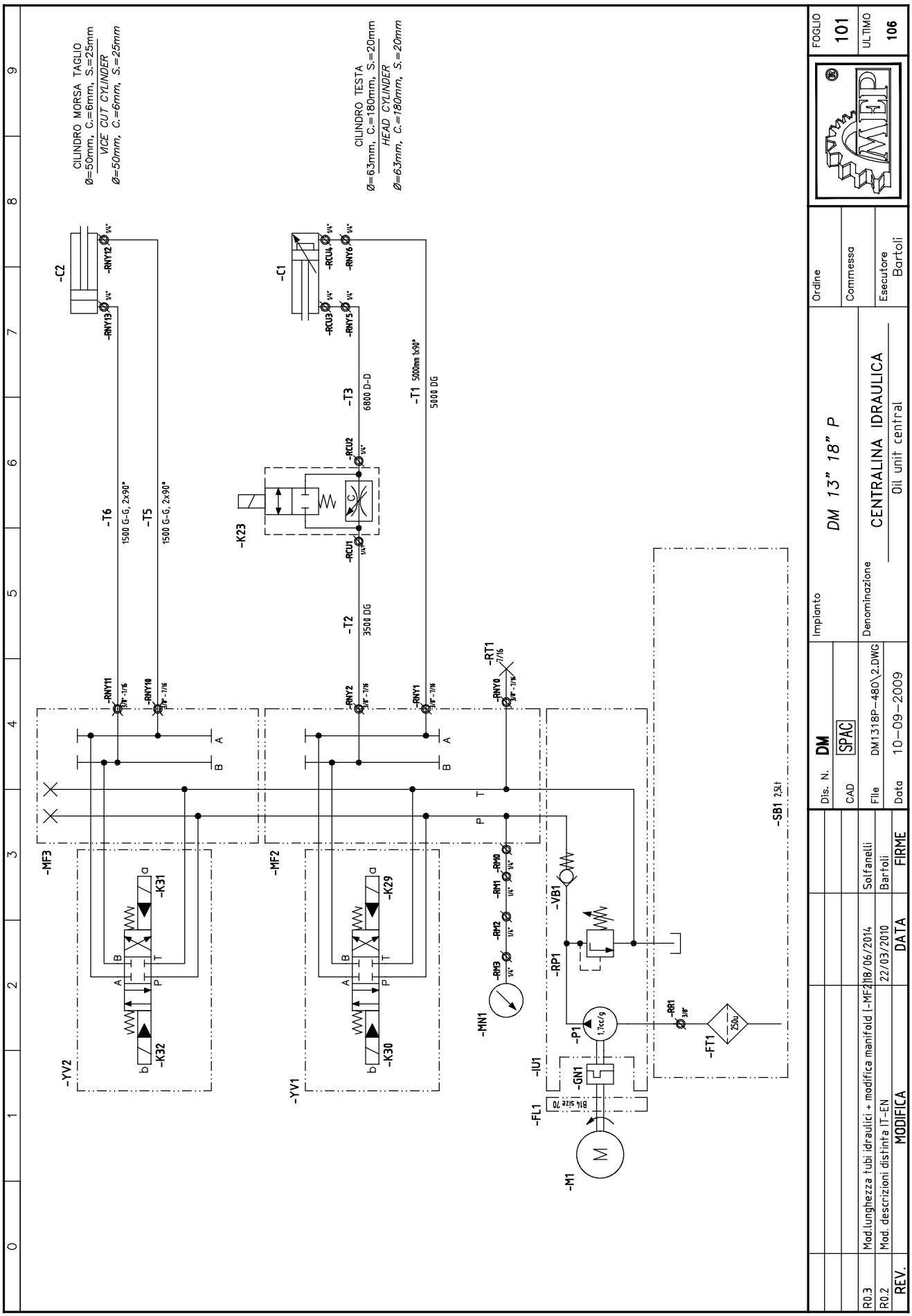
CILINDRO MORSA TAGLIO
Ø=50mm, C.=6mm, S.=25mm
VICE CUT CYLINDER
Ø=50mm, C.=6mm, S.=25mm
CILINDRO TESTA
Ø=63mm, C.=180mm, S.=20mm
HEAD CYLINDER
Ø=63mm, C.=180mm, S.=20mm
-C2
-C1
-T6
1500 G-G, 2x90°
-T5
1500 G-G, 2x90°
-T3
6800 D-D
-T1 5000mm 1x90°
5000 DG
-T2
3500 DG
-K23
-RNY13
-RNY12
-RNY11
-RNY10
-RNY2
-RNY1
-RNY0
-RCU1
-RCU2
-RCU3
-RCU4
-RNY5
-RNY6
-RT1
-MF3
-MF2
-YV2
-YV1
-K31
-K32
-K29
-K30
-RM0
-RM1
-RM2
-RM3
-MN1
-VB1
-RP1
-P1
-IU1
-GN1
-FL1
-M1
-RR1
-FT1
-SB1 2,5Lt
FOGLIO
101
ULTIMO
106
Ordine
Commessa
Esecutore
Bartoli
Impianto
DM 13" 18" P
Denominazione
CENTRALINA IDRAULICA
Oil unit central
Dis. N.
DM
CAD
SPAC
File
DM1318P-480\2.DWG
Data
10-09-2009
R0.3
Mod.lunghezza tubi idraulici + modifica manifold (-MF2)
18/06/2014
Solfanelli
R0.2
Mod. descrizioni distinta IT-EN
22/03/2010
Bartoli
REV.
MODIFICA
DATA
FIRME

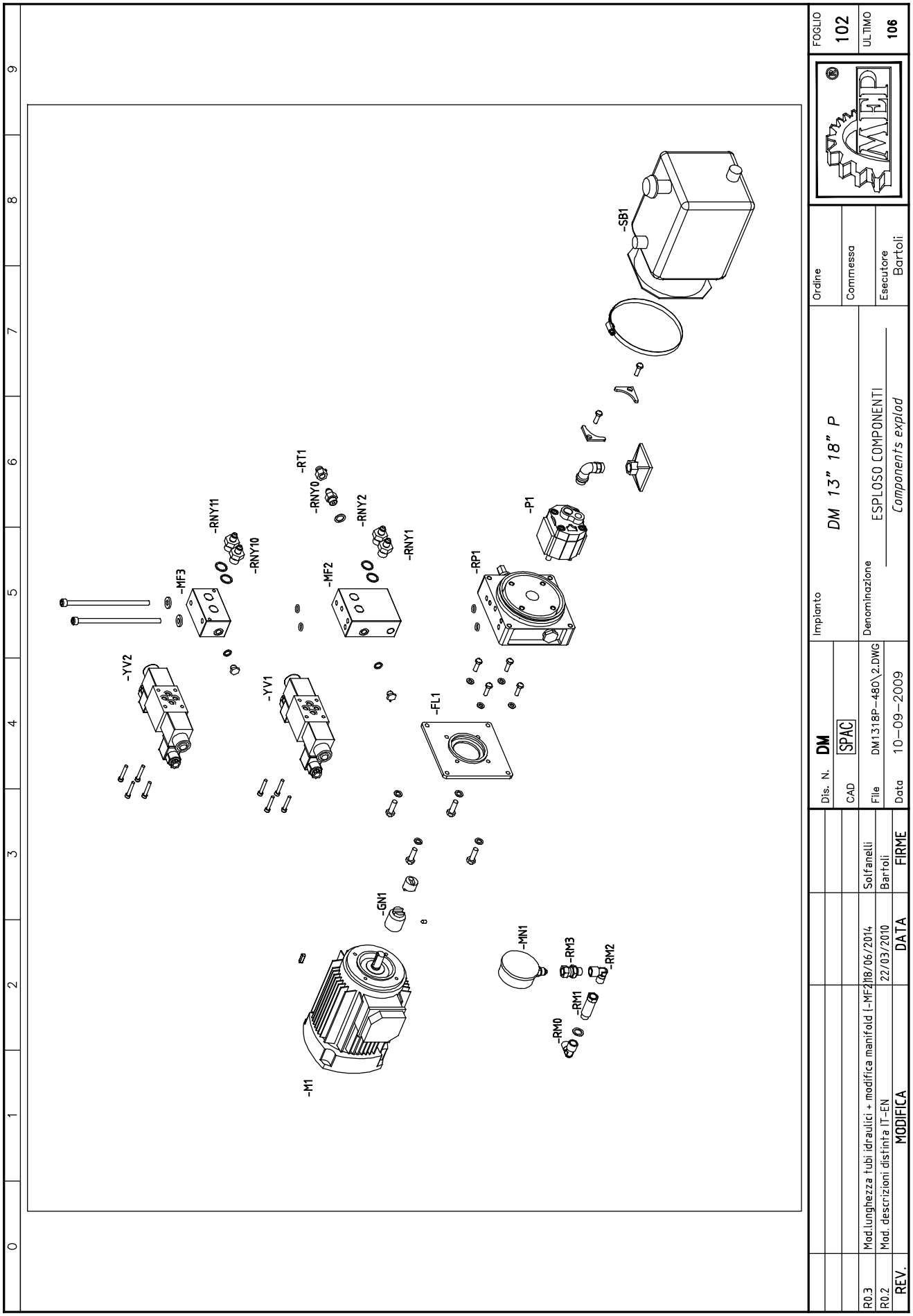
-SB1
-P1
-RP1
-RT1
-RNY0
-RNY2
-RNY1
-RNY11
-RNY10
-MF3
-MF2
-YV2
-YV1
-FL1
-GN1
-MN1
-RM3
-RM2
-RM1
-RM0
-M1
FOGLIO
102
ULTIMO
106
Ordine
Commessa
Esecutore
Bartoli
Impianto
DM 13" 18" P
Denominazione
ESPLOSO COMPONENTI
Components explod
Dis. N.
DM
CAD
SPAC
File
DM1318P-480\2.DWG
Data
10-09-2009
R0.3
Mod.lunghezza tubi idraulici + modifica manifold (-MF2)
18/06/2014
Solfanelli
R0.2
Mod. descrizioni distinta IT-EN
22/03/2010
Bartoli
REV.
MODIFICA
DATA
FIRME

0	1	2	3	4	5	6	7	8	9

Nome/Item	Tipo/Type	Descrizione/Description	Costruttore/Marke	Quadro/Board	Fg/Sh	Q.ta/Q.ty
-C1	V.d.M.	Vedi distinta meccanica	Mep	=CiBmMep	101	1
-C2	V.d.M.	Vedi distinta meccanica	Mep	=CiBmMep	101	1
-K23	043.0585	Regolatore di flusso con by-pass baffo C da 1/4"G	Mep	=CiBmMep	101	1
-RCU1	000.0P67	Riduzione gomito M/M da 1/4"G	Mep	=CiBmMep	101	1
-RCU2	000.0P67	Riduzione gomito M/M da 1/4"G	Mep	=CiBmMep	101	1
-RCU3	043.0275	Nipplo da 1/4"G	Mep	=CiBmMep	101	1
	043.0250	Riduzione gomito M/F da 1/4"G	Mep			1
-RCU4	043.0275	Nipplo da 1/4"G	Mep	=CiBmMep	101	1
	043.0250	Riduzione gomito M/F da 1/4"G	Mep			1
-RNY12	043.0275	Nipplo da 1/4"G	Mep	=CiBmMep	101	1
-RNY13	043.0275	Nipplo da 1/4"G	Mep	=CiBmMep	101	1
-RNY5	043.0275	Nipplo da 1/4"G	Mep	=CiBmMep	101	2
-RNY6	043.0275	Nipplo da 1/4"G	Mep	=CiBmMep	101	2
-T1	044.0153	Tubo idraulico 1/4"G 5000 D-G	Mep	=CiBmMep	101	1
-T2	044.0151	Tubo idraulico 1/4"G 3500 D-G	Mep	=CiBmMep	101	1
-T3	044.0170	Tubo idraulico 1/4"G 6800 D-D	Mep	=CiBmMep	101	1
-T5	044.0107	Tubo idraulico 1/4"G 1500 G-G	Mep	=CiBmMep	101	1
-T6	044.0107	Tubo idraulico 1/4"G 1500 G-G	Mep	=CiBmMep	101	1
-FL1	044.5154	Flangia accoppiamento motore C71 B14	Mep	=CiCv	101	1
-FT1	0ID.00P5	Filtro aspirazione Ø80 250µ 3/8"Gf 200.5461.12010 BUCHER	Mep	=CiCv	101	1
-GN1	044.4637	Giunto elas. lato pompa AP100 S309	Mep	=CiCv	101	1
	044.4638	Giunto elas. lato motore C80 B14 -drive 131 200.6594.0019.0 Bucher	Mep			1
-IU1	034.1383	Supporto esterno pompa BUCHER	Mep	=CiCv	101	1
-M1	019.4006	Motore da 0,5Hp C71 B14 V230-415-50Hz / V240-480-60Hz	Mep	=CiCv	101	1
-MF2	007.6714	Manifold idraulico 1 posto CETOP 3 e uscita manomnetro + uscita scarico per housing BUCHER	Mep	=CiCv	101	1
-MF3	007.6691	Manifold 1 valvole DIN24350 circuito chiuso	Mep	=CiCv	101	1
-MN1	043.0557	Manometro 0-60bar Ø40 con attacco radiale da 1/4"G	Mep	=CiCv	101	1
-P1	044.4513	Pompa ingranaggi 1,7cc/g AP100/1.7 S.309 200.7482.20020 BUCHER	Mep	=CiCv	101	1
-RM0	043.0250	Raccordo gomito M/F da 1/4"G	Mep	=CiCv	101	1
-RM1	043.0274	Raccordo diritto M/F da 1/4"G	Mep	=CiCv	101	1
-RM2	043.0250	Riduzione gomito M/F da 1/4"G	Mep	=CiCv	101	1
-RM3	043.0553	Raccordo girevole 1/4"G idraulico per manometro	Mep	=CiCv	101	1
-RNY0	007.8023	Nipplo ID. MM 1/4"G - 7/16 UNF	Mep	=CiCv	101	1
-RNY1	007.8020	Riduzione diritta M/M da 3/8"G a 7/16 UNF	Mep	=CiCv	101	1
-RNY10	007.8020	Riduzione diritta M/M da 3/8"G a 7/16 UNF	Mep	=CiCv	101	1
-RNY11	007.8020	Riduzione diritta M/M da 3/8"G a 7/16 UNF	Mep	=CiCv	101	1
-RNY2	007.8020	Riduzione diritta M/M da 3/8"G a 7/16 UNF	Mep	=CiCv	101	1
-RP1	044.1263	Valvola di massima pressione idraulica a cartuccia 200.9874.00700 BUCHER	Mep	=CiCv	101	1
-RR1	0ID.00P8	Tubo aspirazione M-M 3/8"G lungo 120mm con gomito	Mep	=CiCv	101	1
-RT1	044.4556	Tappo per manicotto 7/16 UNF	Mep	=CiCv	101	1
-SB1	0ID.0P20	Vasca olio 2,5Lt tipo P-025Q-F 200.9734.2007.0	Mep	=CiCv	101	1
-VB1	044.4554	Valvola di blocco idraulica a cartuccia 200.7876.01410 BUCHER	Mep	=CiCv	101	1
-YV1	043.1002	Elettrovalvola idraulica 4/2 con bobine 24 Vcc	Mep	=CiCv	101	1
-YV2	043.1002	Elettrovalvola idraulica 4/3 con bobine 24 Vcc	Mep	=CiCv	101	1

REV.	MODIFICA	DATA	FIRME
R0.3	Mod.lunghezza tubi idraulici + modifica manifold (-MF2)	18/06/2014	Solfanelli
R0.2	Mod. descrizioni distinta IT-EN	22/03/2010	Bartoli

Dis. N. DM
CAD SPAC
File DM1318P-480\2.DWG
Data 10-09-2009

Impianto: DM 13" 18" P

Denominazione: DISTINTA MATERIALI / MATERIAL LIST

Ordine
Commessa
Esecutore: Bartoli

FOGLIO 103
ULTIMO 106

IUD/IUV card

114	G	0 Vdc (inv)
027	S	Blade tension
052	R	+ 24 Vdc
025	B	- 12 Vdc
024	G	Head position
023	H	+ 12 Vdc
022	R	Amperometer transformer
021	R	

24 Vdc	R	052
0 Vdc	L	051

Proximity	M	031
Blade guard lim. sw.	R	032
Foot pedal start	HS	033
Handgrip start	V	034
		NC
Oil level	N	036
Speed switch	R	037
Blade guard lim switch	M	038

24 Vdc	R	561
0 Vdc	L	60
		NC

Emergency	01	R
	02	R

Reset	01	R
	02	R

041	M	Vice opening SV
042	B	Vice closing SV
043	V	Head lifting SV
044	G	Head lowering SV
045	Z	Regenerator solenoid valve
046	R	Bypass solenoid v.
047	R	Blade motor
048	R	Hydraulic control unit
049	R	Electric pump
050	S	Min. lubrication
NC		
NC		

060	H	Inverter start
061	L	Inverter start

58	L	0 Vdc
059	R	24 Vdc
PE	GV	

Wire colour-coding	
A - light blue	M - brown
B - white	N - black
C - orange	R - red
G - yellowe	S - pink
H - grey	V - green
L - blue	Z - purple

Exploded views

This part of the manual contains detailed exploded views of the machine which can help to gain a deeper knowledge of how it is made.

Motor unit

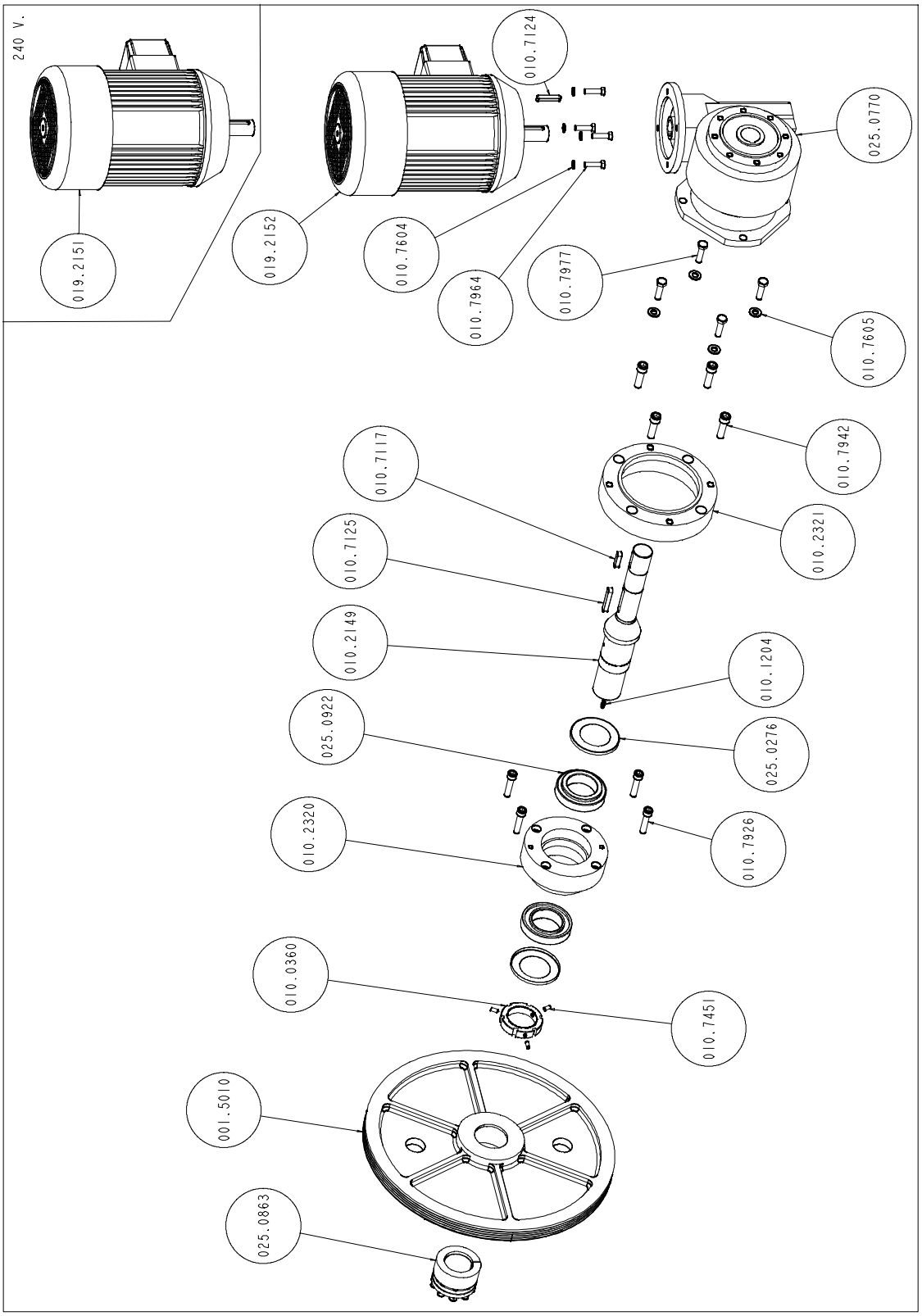

Code	Description	U. of M.	Quantity
001.5010	PULEGGIA- MOTRICE- SHARK452.PRT	NR	1
010.0360	GHIERA- SH500- NT.PRT	NR	1
010.1204	OLIATORE- A- SFERA- DIA6.PRT	NR	1
010.2149	ALBERO- RID- SH310- CNC- HS.PRT	NR	1
010.2320	TAMPONE- RIDUTTORE- DM13- 18P.PRT	NR	1
010.2321	FLANGIA- AGG- RIDUTTORE- DM13- 18P.PRT	NR	1
010.7117	LINGUETTA- A10X8X35.PRT	NR	1
010.7124	LINGUETTA- A8X7X45.PRT	NR	1
010.7125	LINGUETTA- A10X8X56.PRT	NR	1
010.7451	M6X12- VCEI- PC.PRT	NR	3
010.7604	ROSETTA- 8_4X14.PRT	NR	4
010.7605	ROSETTA- 10_5X21.PRT	NR	4
010.7926	M10X45- TCEI.PRT	NR	4
010.7942	M12X40- TCEI.PRT	NR	4
010.7964	M8X30- TE.PRT	NR	4
010.7977	M10X35- TE.PRT	NR	4
019.2151	MOTORE- B14- 112- V127- 230_UL- CSA.PRT	NR	1
019,2152	MOTORE- B14- 112- V274- 480_UL- CSA.PRT	NR	1
025.0276	NILOS- 32011X.PRT	NR	2
025.0770	FCDPK85FC- 112B14- FIXEDSTAR.ASM	NR	1
025.0863	CALETTATORE- TLK130- 50X80.ASM	NR	1
025.0922	32011X.PRT	NR	2

Driving pulley unit

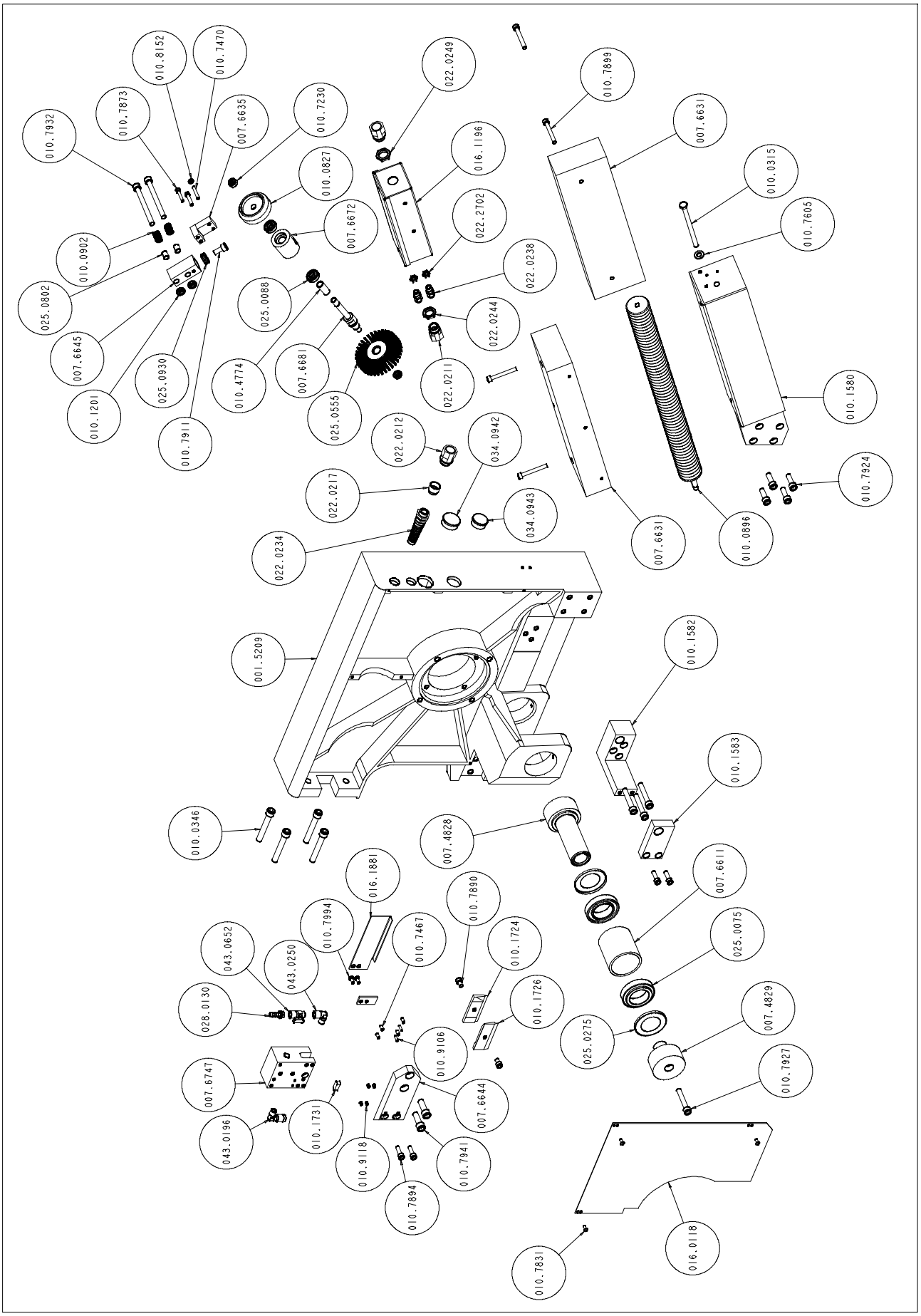

Code	Description	U. of M.	Quantity
001.5209	ARCHETTO- SPM- DM13- 18P.PRT	NR	1
007.4828	PERNO- SNODO- TESTA- F- SH452_.PRT	NR	1
007.4829	PERNO- SNODO- TESTA- M- SH452.PRT	NR	1
007.6611	DISTANZIALE- CUSCIN- SNODO- TESTA.PRT	NR	1
007.6631	PIASTRA- BILANCIATRICE- SH452.PRT	NR	2
007.6635	PIASTRA- REG- SPAZ- PULI- SH452.ASM	NR	1
007.6644	STAF- TEST- POST- SH452.PRT	NR	1
007.6645	STAFFA- FIX- ALB- SPAZ- PULI- SH452.PRT	NR	1
007.6672	SUPP- ALB- SPAZ- PULI- SH452.PRT	NR	1
007.6681	ALBERO- PORTASPAZ- PULILAMA- SH452.PRT	NR	1
007.6747	TEST- GUIDALAMA- POST- DM13- 18P.PRT	NR	1
010.0315	M10X140- TE.PRT	NR	1
010.0346	M12X80- TCEI- 12K.PRT	NR	5
010.0827	RUOTA- SPAZ- PULILAMA- SH452.ASM	NR	1
010.0896	MOLLA- STIL- RIC- TESTA- SH400.PRT	NR	1
010.0902	MOLLA- PFISSO.PRT	NR	2
010.1201	DADO- M10- BASSO.PRT	NR	3
010.1580	STAFFA- AGG- MOLLA- ARCH- SH452.ASM	NR	1
010.1582	STAFFA- AGG- CIL- ARCHETTO- SH452.PRT	NR	1
010.1583	STAFFA- ESTERNA- CILINDRO- SH452.PRT	NR	1
010.1724	GUIDALAMA- ANT- MOBILE- SH400.PRT	NR	1
010.1726	GUIDALAMA- ANT- FIX- SH400.PRT	NR	1
010.1731	LINGUETTA- PREMILAM- SH500.PRT	NR	1
010.4774	DISTANZIALE- CUSC- PULI- LAM- 452.PRT	NR	1
010.7230	DADO- AUTOB- M10.PRT	NR	1
010.7467	M6X12- VCEI- P.PRT	NR	4
010.7470	M6X35- VCEI- P.PRT	NR	1
010.7605	ROSETTA- 10_5X21.PRT	NR	1
010.7831	M5X12- BUTTO.PRT	NR	3
010.7873	M6X30- TCEI.PRT	NR	2
010.7890	M8X12- TCEI.PRT	NR	2
010.7894	M8X25- TCEI.PRT	NR	4
010.7899	M8X60- TCEI.PRT	NR	4
010.7911	M10X20- TCEI.PRT	NR	1
010.7924	M10X30- TCEI.PRT	NR	4
010.7927	M10X60- TCEI.PRT	NR	4
010.7932	M10X110- TCEI.PRT	NR	2
010.7941	M12X35- TCEI.PRT	NR	2
010.7994	M6X12- TSPEI.PRT	NR	2
010.8152	DADO- M6- BASSO.PRT	NR	1
010.9106	M4X16- VCEI- P.PRT	NR	2
010.9118	M6X6- VCEI- P.PRT	NR	4
016.0118	COPERTURA- POST- SH452- NEW.PRT	NR	1
016.1196	SCATOLA- DERIV- SHSXINT.ASM	NR	1
016.1881	PROT- LAMA- POST- DM13- 18P.ASM	NR	1
022.0211	PG- 13_5- KIEPE.PRT	NR	1
022.0212	PG- 16- KIEPE.PRT	NR	2
022.0217	RIDUZ- PG16M- PG13_5F.PRT	NR	1
022.0234	PASSACAVO- PG13_5.PRT	NR	1
022.0238	PRESSACAVO- PG7- BS01.PRT	NR	2
022.0244	DADO- PASSACAVO- PG13_5.PRT	NR	1
022.0249	DADO- PASSACAVO- PG16.PRT	NR	1
022.2702	DADO- PG7- BL01.PRT	NR	2
025.0075	32009X.PRT	NR	2
025.0088	6001- 2Z.PRT	NR	2
025.0275	NILOS- 32009X.PRT	NR	2
025.0555	SPAZ- PULILAMA- 3103- 0- 100- SH400.PRT	NR	1
025.0802	BOCCOLA- GRAFITATA- L15DIA10.PRT	NR	2
025.0930	51100.PRT	NR	1
028.0130	RACCORDO- 1_4- 9_CL2601.PRT	NR	1

Code	Description	U. of M.	Quantity
034.0942	TAPPO_PLASTICA_STT40.PRT	NR	1
034.0943	TAPPO_PLASTICA_STT35.PRT	NR	1
043.0196	RACCORDO- GOMITO- MF8X1_4CL1020.PRT	NR	1
043.0250	GOMITO- MF1_4CL2020.PRT	NR	1
043.0652	RUBINETTO- 1_4- F- M.PRT	NR	1

Front flywheel assembly

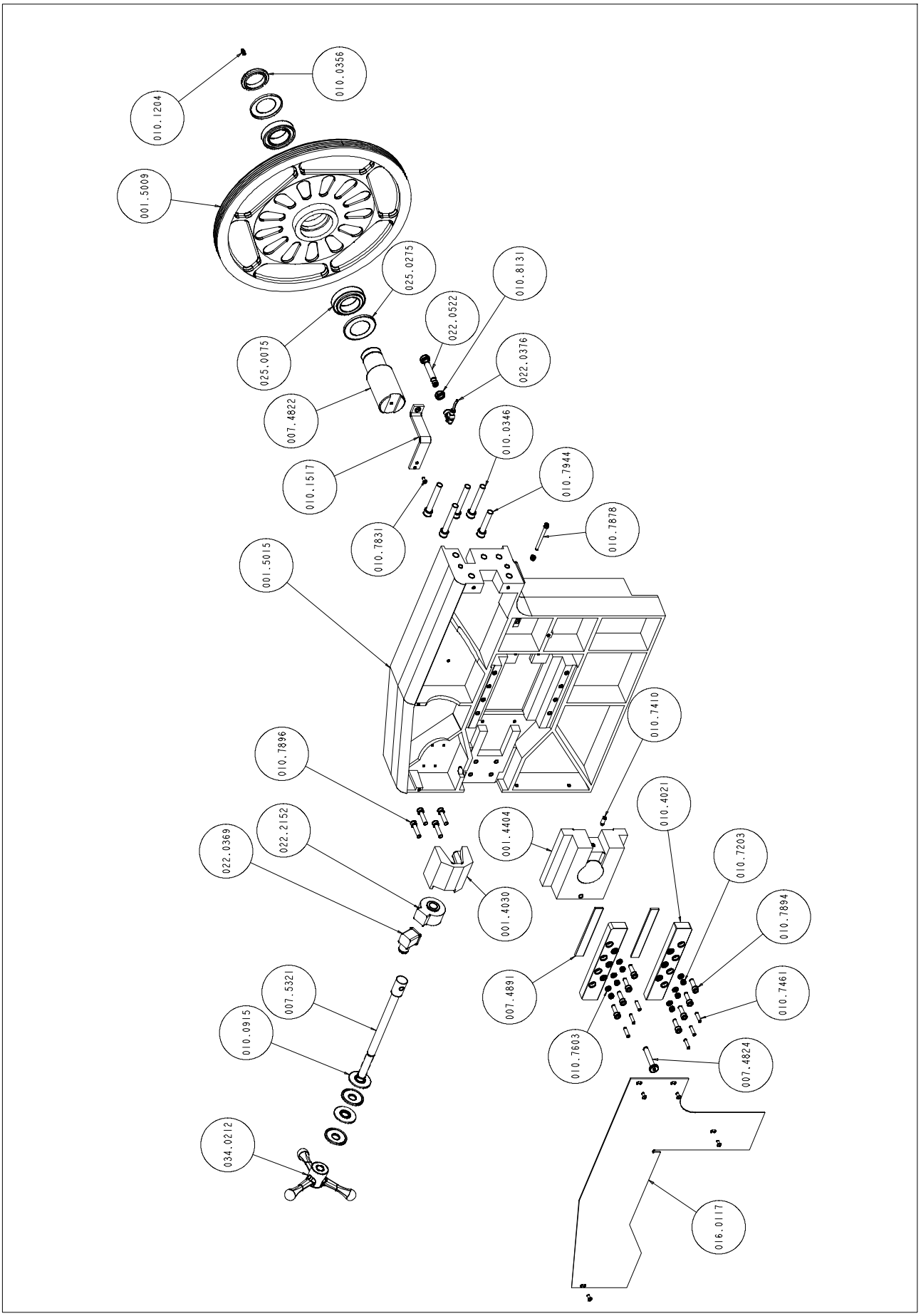

Code	Description	U. of M.	Quantity
001.4030	SUPP- TENS- LAMA- EL- SH- CNCFE.PRT	NR	1
001.4404	SLITTA- TENDILAMA- SH452.PRT	NR	1
001.5009	PULEGGIA- FOLLE- SHARK452.PRT	NR	1
001.5015	SPF- SH452- NT.PRT	NR	1
007.4822	PERNO- PULEGGIA- FOLLE- SH400.PRT	NR	1
007.4824	PERNO- BLOCC- CIL- TENS- LAMA- TR400.PRT	NR	1
007.4891	LARD- SLIT- TEN- E- SUP- TES- SH400.PRT	NR	2
007.5321	PERNO- TENSIONAM- LAMA- SH420SXI.PRT	NR	1
010.0346	M12X80- TCEI- 12K.PRT	NR	4
010.0356	GHIERA- 45- 15.PRT	NR	1
010.0915	MOLLA- A- TAZZA- 18- 50- 3.PRT	NR	4
010.1204	OLIATORE- A- SFERA- DIA6.PRT	NR	1
010.1517	STAFFA- FIX- PROXIMITY- SH400.PRT	NR	1
010.4021	PIAS- REG- SLITTA- LARDONE- SH320.PRT	NR	2
010.7203	DADO- M6.PRT	NR	7
010.7410	M8X16- VCEI- PR.PRT	NR	1
010.7461	M6X25- VCEI- P.PRT	NR	6
010.7603	ROSETTA- 6_4X12_5.PRT	NR	6
010.7831	M5X12- BUTTO.PRT	NR	5
010.7878	M6X70- TCEI.PRT	NR	1
010.7894	M8X25- TCEI.PRT	NR	8
010.7896	M8X35- TCEI.PRT	NR	4
010.7944	M12X60- TCEI.PRT	NR	1
010.8131	DADO- M12- BASSO.PRT	NR	2
016.0117	COPERTURA- ANT- SH452- NEW.PRT	NR	1
022.0369	TENSIONATORE- ELETTRON- COMP2.PRT	NR	1
022.0376	CONNETTORE- F303N5000XPROSSIMITI.PRT	NR	1
022.0522	PROXIMITY.PRT	NR	1
022.2152	TENSIONATORE- ELETTRON- COMP1.PRT	NR	1
025.0075	32009X.PRT	NR	2
025.0275	NILOS- 32009X.PRT	NR	2
034.0212	VOLANTINO- S20.PRT	NR	1

Fixed worktable

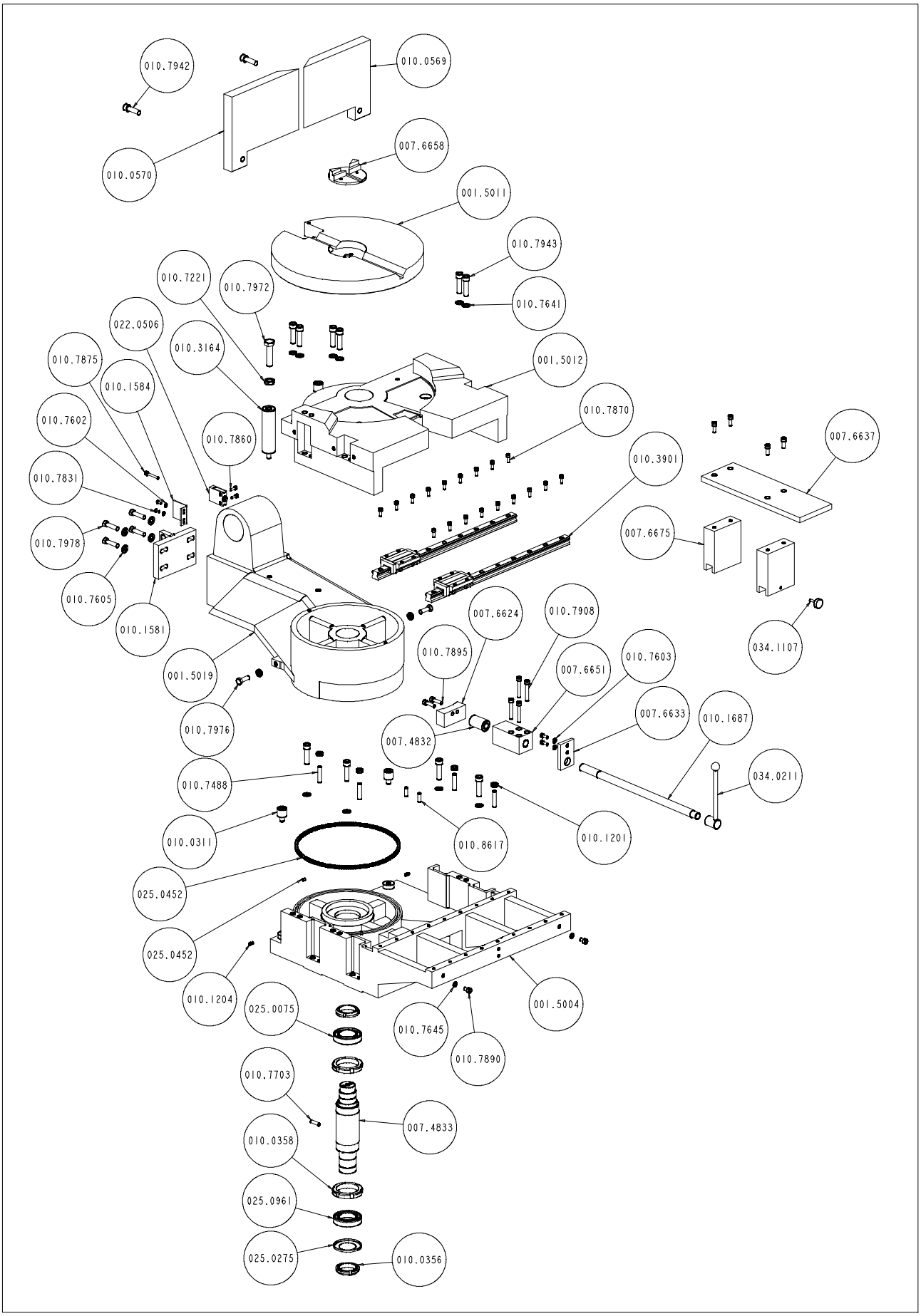

Code	Description	U. of M.	Quantity
001.5004	PIASTRA- BASAMENTO- SH450.PRT	NR	1
001.5011	PIANO- DI- TAGLIO- SH452.PRT	NR	1
001.5012	PIATTAFORMA- FISSA- SUP- R- SH452.PRT	NR	1
001.5019	PIATTAFORMA- ROTANTE- DM- 13- 18.PRT	NR	1
007.4832	PERNO- BLOC- PIATT- GIREVOLE- SH452.PRT	NR	1
007.4833	PERNO- DI- CENTRO- SH452NT.PRT	NR	1
007.6624	GANASCIA- BLOC- PIAT- GIR- SH452.PRT	NR	1
007.6633	PIAS- FIX- VITE- PIAT- ROT- SH452.PRT	NR	1
007.6637	PIANO- APPOG- BARRA- SUPPLEM- SH452.PRT	NR	1
007.6651	CHIOCCIOLA- BLOC- PIATT- ROT- SH452.PRT	NR	1
007.6658	BUSSOLA- GANASCE- SQUADR- SH452.PRT	NR	1
007.6675	PIANO- APPOG- BARRA- SUPPL- 1- NT.PRT	NR	2
010.0311	010_0311.PRT	NR	3
010.0356	GHIERA- 45- 15.PRT	NR	2
010.0358	GHIERA- 60- 2.PRT	NR	2
010.0569	GAN- FIX- DX- SH452NT.PRT	NR	1
010.0570	GAN- FIX- SX- SH452NT.PRT	NR	1
010.1201	DADO- M10- BASSO.PRT	NR	6
010.1204	OLIATORE- A- SFERA- DIA6.PRT	NR	2
010.1581	STAFFA- AGGANCIO- MOLLE- PG- SH452.PRT	NR	1
010.1584	STAFFA- FIX- FINECORSA- SH452.PRT	NR	1
010.1688	VITE- BLOCC- PIATT- ROTANTE- SH452.PRT	NR	1
010.3164	BATTUTA- FINE- CORSA- TESTA- SH400.PRT	NR	1
010.3901	HSR25LA1SSC1S- 520L- E20.ASM	NR	2
010.7221	DADO- M16- BASSO.PRT	NR	1
010.7488	M10X45- VCEI- P.PRT	NR	4
010.7602	ROSETTA- 5_3X10.PRT	NR	2
010.7603	ROSETTA- 6_4X12_5.PRT	NR	2
010.7605	ROSETTA- 10_5X21.PRT	NR	4
010.7641	ROSETTA- GR- M12.PRT	NR	10
010.7645	ROSETTA- GR- M8.PRT	NR	2
010.7703	SPINA- CIL- 8X30.PRT	NR	1
010.7831	M5X12- BUTTO.PRT	NR	2
010.7860	M5X16- TCEI.PRT	NR	2
010.7870	M6X16- TCEI.PRT	NR	20
010.7875	M6X40- TCEI.PRT	NR	1
010.7890	M8X12- TCEI.PRT	NR	2
010.7893	M8X20- TCEI.PRT	NR	4
010.7895	M8X30- TCEI.PRT	NR	2
010.7908	M8X50- TCEI.PRT	NR	4
010.7942	M12X40- TCEI.PRT	NR	2
010.7943	M12X45- TCEI.PRT	NR	10
010.7972	M16X60- TE.PRT	NR	1
010.7976	M10X30- TE.PRT	NR	2
010.7978	M10X40- TE.PRT	NR	4
010.8617	SPINA- CIL- 8X25.PRT	NR	2
022.0506	FINECORSA- SH200.PRT	NR	1
025.0075	32009X.PRT	NR	1
025.0275	NILOS- 32009X.PRT	NR	1
025.0452	RULLINO- 6X6AISI420.PRT	NR	140
025.0961	6009.PRT	NR	1
034.0211	LEVA- BLOCC- PIANO- GIREVOLE.PRT	NR	1
034.1107	VOLANTINO- DIAM30M6X20.PRT	NR	1

Cutting head cover

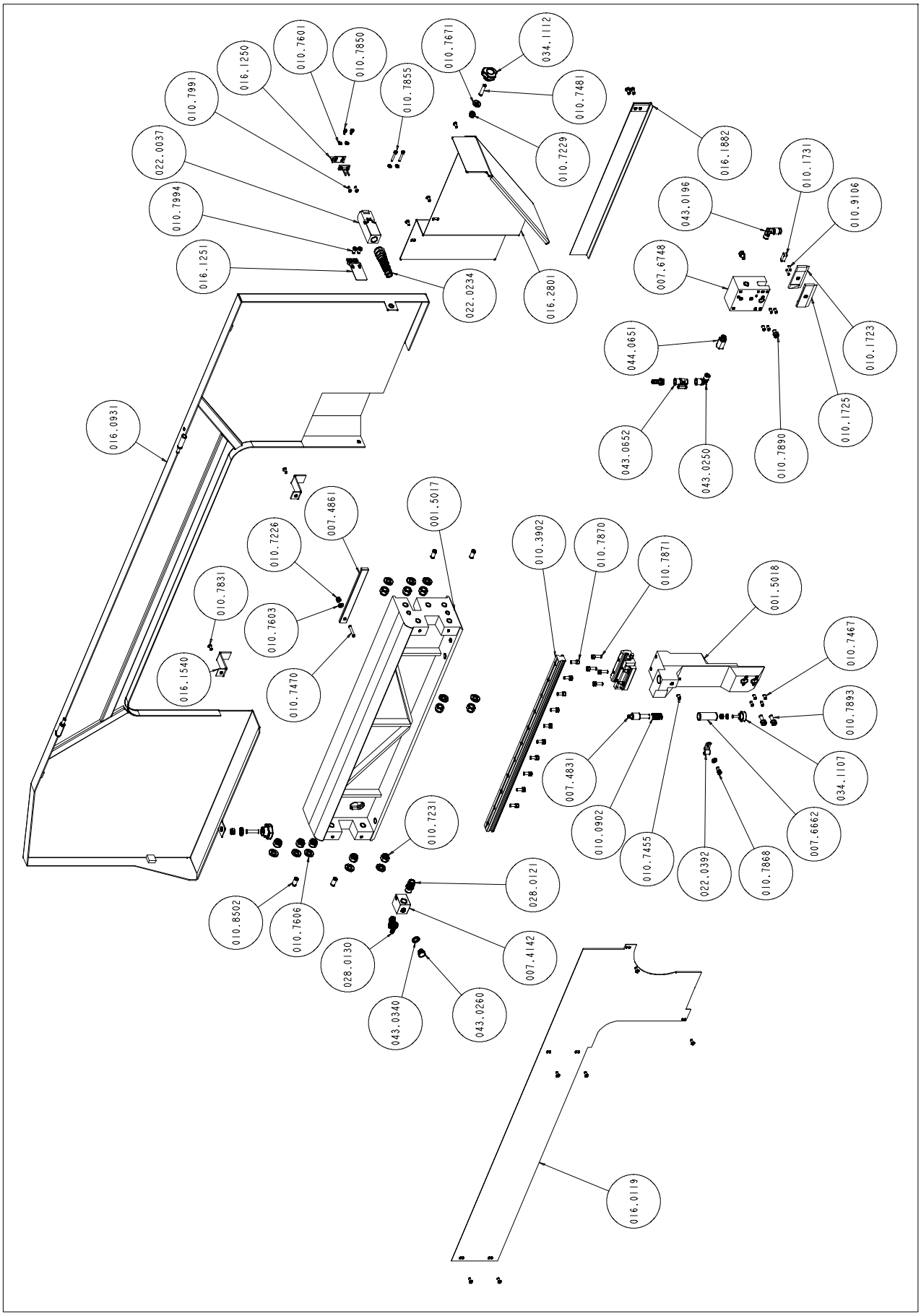

Code	Description	U. of M.	Quantity
001.5017	TRAVE- SH452- NT.PRT	NR	1
001.5018	STAFFA- TEST- ANT- SH452- NT.PRT	NR	1
007.4142	SQUADRETTO- LIQUIDO- SH320- 330.PRT	NR	1
007.4831	PERNO- BLOCCO- TESTINA- SH452.PRT	NR	1
007.4861	SOSTEGNO- COPERCHIO- ARCHET- SH400.PRT	NR	1
007.6662	BOCCOLA- PUNTO- FISSO- SH452.PRT	NR	1
007.6748	TEST- GUIDALAMA- ANT- DM13- 18P.PRT	NR	1
010.0902	MOLLA- PFISSO.PRT	NR	1
010.1723	GUIDALAMA- POST- MOBILE- SH400.PRT	NR	1
010.1725	GUIDALAMA- POST- FIX- SH400.PRT	NR	1
010.1731	LINGUETTA- PREMILAM- SH500.PRT	NR	1
010.3902	HSR25LA1SSC1S- 640L- E20.ASM	NR	1
010.7226	DADO- AUTOB- M6.PRT	NR	2
010.7229	DADO- AUTOB- M8.PRT	NR	2
010.7231	DADO- AUTOB- M12.PRT	NR	10
010.7455	M8X10- VCEI- PC.PRT	NR	1
010.7467	M6X12- VCEI- P.PRT	NR	8
010.7470	M6X35- VCEI- P.PRT	NR	1
010.7481	M8X35- VCEI- P.PRT	NR	2
010.7601	ROSETTA- 4_1X9.PRT	NR	4
010.7603	ROSETTA- 6_4X12_5.PRT	NR	3
010.7606	ROSETTA- 13X24.PRT	NR	10
010.7671	ROSETTA- 8_4X3.PRT	NR	2
010.7831	M5X12- BUTTO.PRT	NR	11
010.7850	M4X8- TCEI.PRT	NR	2
010.7855	M4X30- TCEI.PRT	NR	2
010.7868	M6X12- TCEI.PRT	NR	1
010.7870	M6X16- TCEI.PRT	NR	10
010.7871	M6X20- TCEI.PRT	NR	4
010.7890	M8X12- TCEI.PRT	NR	2
010.7893	M8X20- TCEI.PRT	NR	2
010.7991	M4X12- TSPEI.PRT	NR	2
010.7994	M6X12- TSPEI.PRT	NR	4
010.8502	SPINA- CIL- 10X22.PRT	NR	4
010.9106	M4X16- VCEI- P.PRT	NR	2
016.0119	COPERTURA- TRAVE- SH452- NEW.PRT	NR	1
016.0931	COPERCHIO- ARCHETTO- SH452- NEW.ASM	NR	1
016.1250	PIASTRA- FIX- INT- COP- SH- NT.PRT	NR	1
016.1251	PIAS- ATT- FC- COP- ARC- SH- NT.PRT	NR	1
016.1540	STAFFA- DI- FERMO- SH452- NT.PRT	NR	2
016.1882	PROT- LAMA- ANT- DM13- 18P.ASM	NR	1
016.2801	RACCOGLITORE- ACQUA- ARCH- SH512.PRT	NR	1
022.0037	022_0037.PRT	NR	1
022.0234	PASSACAVO- PG13_5.PRT	NR	1
022.0392	GRAFFETTE- IN- ACCIAIO- DM10- 11.PRT	NR	1
028.0121	RACCORDO- 3_8- 17CL2601.PRT	NR	1
028.0130	RACCORDO- 1_4- 9_CL2601.PRT	NR	3
034.1107	VOLANTINO- DIAM30M6X20.PRT	NR	1
034.1112	VOLANTINO- DIA_40M8XPIED_SH- CO33.PRT	NR	2
043.0196	RACCORDO- GOMITO- MF8X1_4CL1020.PRT	NR	1
043.0250	GOMITO- MF1_4CL2020.PRT	NR	1
043.0260	TAPPO- TTE4- 1_4- CL2611.PRT	NR	1
043.0340	RONDELLA- RAME- 1_4.PRT	NR	1

Code	Description	U. of M.	Quantity
043.0652	RUBINETTO- 1_4- F- M.PRT	NR	1
044.0651	PROL- 1_4- ESAGONALE- 20MM.PRT	NR	1

Hydraulic control unit

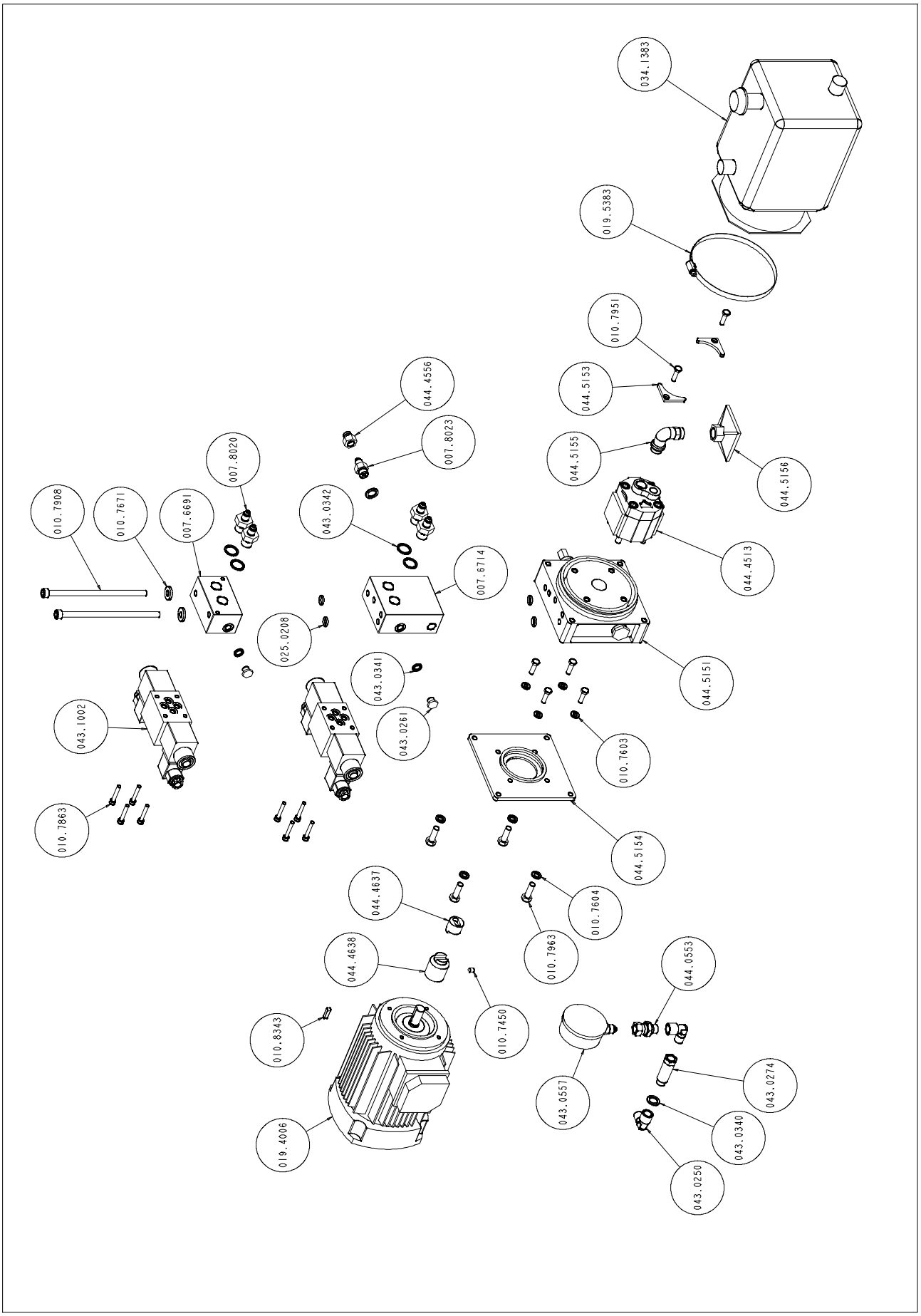

Code	Description	U. of M.	Quantity
007.6691	PANNELLO- IDR- TERMINALE.PRT	NR	1
007.6714	PANNELLO- IDR- CENTR- COMPL- DIST.PRT	NR	1
007.8020	ADATTATORE- 3_8- 7_16- VW18.PRT	NR	4
007.8023	ADATTATORE- 1_4- 7_16- VW18APC.PRT	NR	1
010.7450	M6X6- VCEI- PC.PRT	NR	1
010.7603	ROSETTA- 6_4X12_5.PRT	NR	4
010.7604	ROSETTA- 8_4X14.PRT	NR	4
010.7671	ROSETTA- 8_4X3.PRT	NR	2
010.7863	M5X30- TCEI.PRT	NR	8
010.7908	M8X160- TCEI.PRT	NR	2
010.7951	M6X20- TE.PRT	NR	4
010.7963	M8X25- TE.PRT	NR	4
010.8343	LINGUETTA- A5X5X20.PRT	NR	1
019.4006	MOTORE- CENTRALINA- HP05C71B14.PRT	NR	1
025.0208	ANELLO- OR- 109.PRT	NR	4
034.1383	SERBATOIO- P- 025- Q.PRT	NR	1
043.0250	GOMITO- MF1_4CL2020.PRT	NR	2
043.0261	TAPPO- TTE8- 1_8- CL2611.PRT	NR	2
043.0274	RACCORDO- MF- 1_4- 43- CL2525.PRT	NR	1
043.0340	RONDELLA- RAME- 1_4.PRT	NR	2
043.0341	RONDELLA- RAME- 1_8.PRT	NR	2
043.0342	RONDELLA- RAME- 3_8.PRT	NR	4
043.0557	MANOMETRO- 0- 60- WIKA.PRT	NR	1
043.1002	ELETTROVALVOLA- MONOCENTR- COMPL.ASM	NR	2
044.0553	RACC- IDR- MF- 1_4- GIR- X- MAN- CENTR.PRT	NR	1
044.4513	POMPA- 1_2- CC- GIRO- BUCHER.PRT	NR	1
044.4556	TAPPO- A- TENUTA- IDR- 7_16- UNF.PRT	NR	1
044.4637	GIUNTO- B- MONOCENTRALINA.PRT	NR	1
044.4638	GIUNTO- LATO- MOTORE- CENTR- SXI.PRT	NR	1
044.5151	MINICENTRALINA- POMPA- 1_7- SXI.ASM	NR	1
044.5153	STAFFA- SERBATOIO.PRT	NR	2
044.5154	LANT- ACCOPP- MOT- POMPA- NT.PRT	NR	1
044.5155	ASTA- PESCANTE- CENTR- SXIEVO- A.PRT	NR	1
044.5156	FILTRO- ASPIRAZIONE- CEN- SXIEVO- A.PRT	NR	1

Cylinders

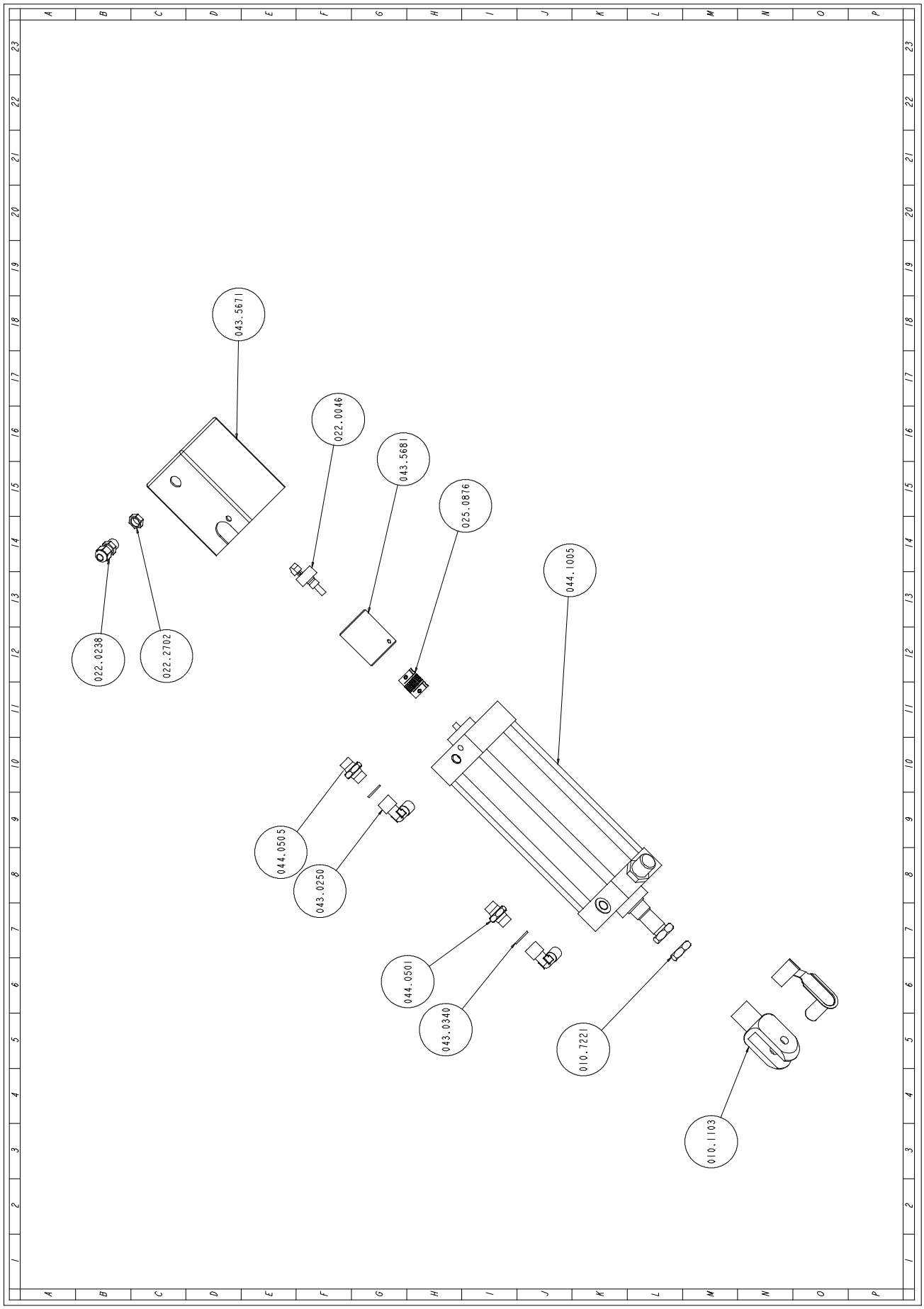
043.5671
022.0046
043.5681
025.0876
044.1005
022.0238
022.2702
044.0505
043.0250
044.0501
043.0340
010.7221
010.1103

Code	Description	U. of M.	Quantity
010.1103	FORCELLA 16 X 1,5	NR	2,000
010.7221	DADO M16 BASSO	NR	1,000
022.0046	POTENZIOMETRO 6639S- 001- 202	NR	1,000
022.0238	PRESSACAVO PG 7 BS01	NR	1,000
022.2702	DADO PG 7 BL01	NR	1,000
025.0876	GIUNTO WA 6- 6 MM.28 X CILINDRO	NR	1,000
043.0250	GOMITO M.F. 1/4 CL 2020	NR	2,000
043.0340	RONDELLA RAME 13X19X1,5- 1/4	NR	2,000
043.5671	PROTEZIONE POTENZIOMETRO CILIN	NR	1,000
043.5681	SUPPORTO POTENZIOMETRO CILINDR	NR	1,000
044.0501	NIPPLO NP 1/4 IDRAULICO	NR	1,000
044.0505	NIPPLO NP 1/4 IDRAULICO	NR	1,000
044.1005	CILINDRO IDRAULICO	NR	1,000

Base assembly

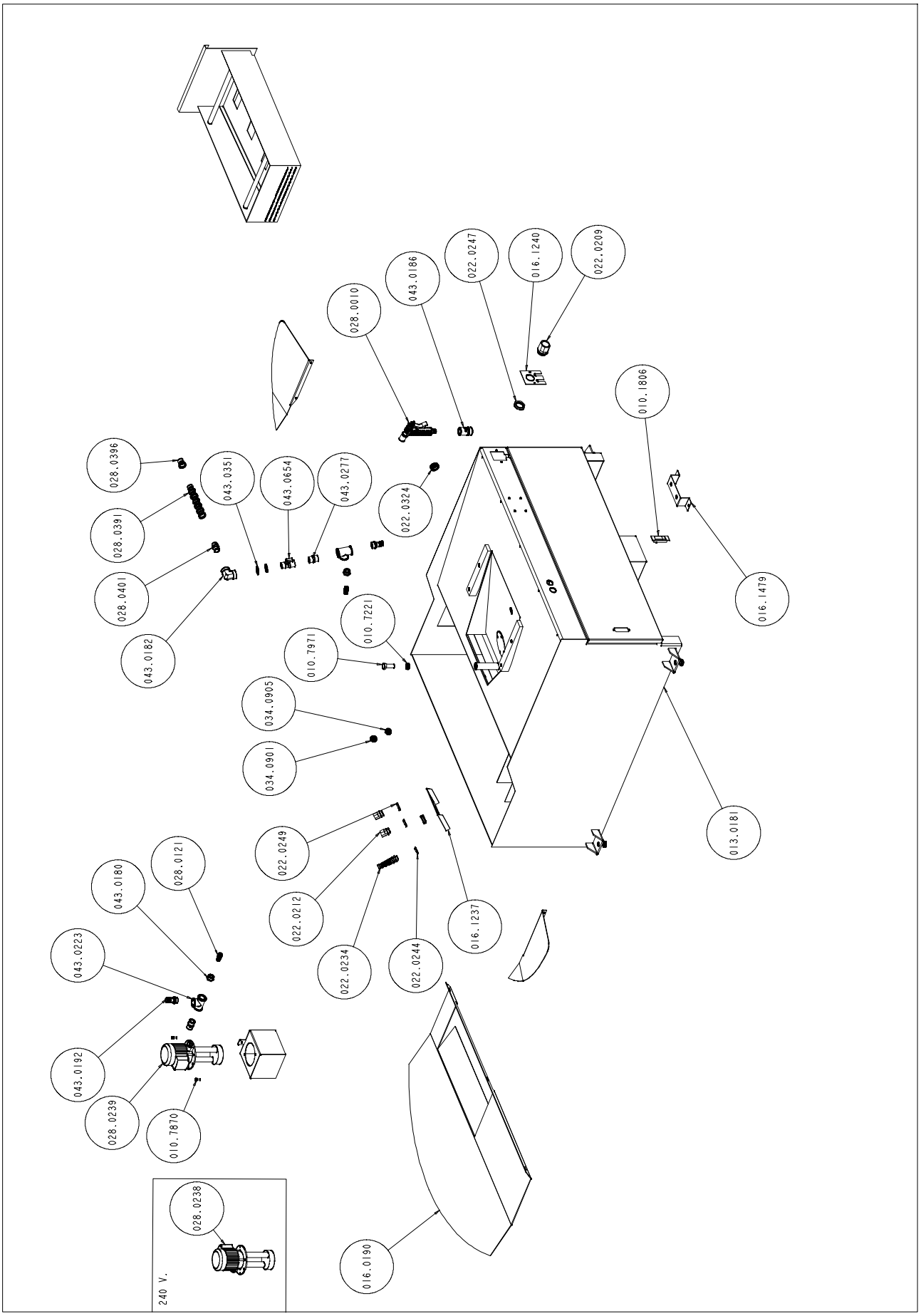

Code	Description	U. of M.	Quantity
010.1806	CHIUSURA- SPORTELLO- BASAMANETO.PRT	NR	1
010.7221	DADO- M16- BASSO.PRT	NR	1
010.7870	M6X16- TCEI.PRT	NR	2
010.7971	M16X40- TE.PRT	NR	1
013.0181	PIEDISTALLO- SH- 452.ASM	NR	1
016.0190	RACCOGLITORE- LIQUIDO- POST- SH452.ASM	NR	1
010.7221	DADO- M16- BASSO.PRT	NR	4
016.1237	MOSTRINA- POST- SH332- 452- SXI- EVO.PRT	NR	1
016.1240	MOSTRINA- ANTERIORE- BAS- SXI- EVO.PRT	NR	1
016.1479	STAFFA- ANCOR- MONOCENTRALINA.PRT	NR	1
022.0209	PG- 29- KIEPE.PRT	NR	1
022.0212	PG- 16- KIEPE.PRT	NR	2
022.0234	PASSACAVO- PG13_5.PRT	NR	1
022.0244	DADO- PASSACAVO- PG13_5.PRT	NR	1
022.0247	DADO- POLIAM- HUMMEL- 262- 2900- 11.PRT	NR	1
022.0249	DADO- PASSACAVO- PG16.PRT	NR	2
022.0324	PASSACAVO24INC- MM2_5.PRT	NR	2
028.0010	PISTOLA.PRT	NR	1
028.0121	RACCORDO- 3_8- 17CL2601.PRT	NR	2
028.0238	ELETTROPOMPA TRIFASE PA 150/120 KW 0,2V. 208- 240.60 HZ PA 150 AVVOLG. RESINATO	NR	1
028.0239	ELETTROPOMPA TRIFASE PA 150/120 KW 0,2V.480.60 HZ PA 150 AV-VOLG. RESINATO	NR	1
028.0391	TUBO- LOOC- LINE- SPD- 3_4.PRT	NR	1
028.0396	UGELLO- 0- 20SPD- FP50- 11B50.PRT	NR	1
028.0401	RACCORDO- 3_4SPD- FP50- 11B50.PRT	NR	1
034.0901	TAPPO- LIVELLO- OLIO- 1_2- GAS.PRT	NR	1
034.0905	TAPPO- OLIO- TAO_3- 1_2NERO.PRT	NR	1
043.0180	RIDUZIONE- M3_4- F3_8.PRT	NR	2
043.0182	RACCORDO- A- GOMITO- FF- 3_4ZINCATO.PRT	NR	1
043.0186	RACCORDO- FEMMINA1_2AQUASTOP.PRT	NR	1
043.0192	RACCORDO- RB- 9889- 3_4X20.PRT	NR	2
043.0223	RACCORDO- TE- FFF- 3_4- ZINCATO.PRT	NR	2
043.0277	NIPPLO- CONICO- ZINCATO- 3_4- IDR.PRT	NR	2
043.0351	GUARNIZIONE- 3_4.PRT	NR	2
043.0654	RUBINETTO- MF- 3_4.PRT	NR	1

Control panel

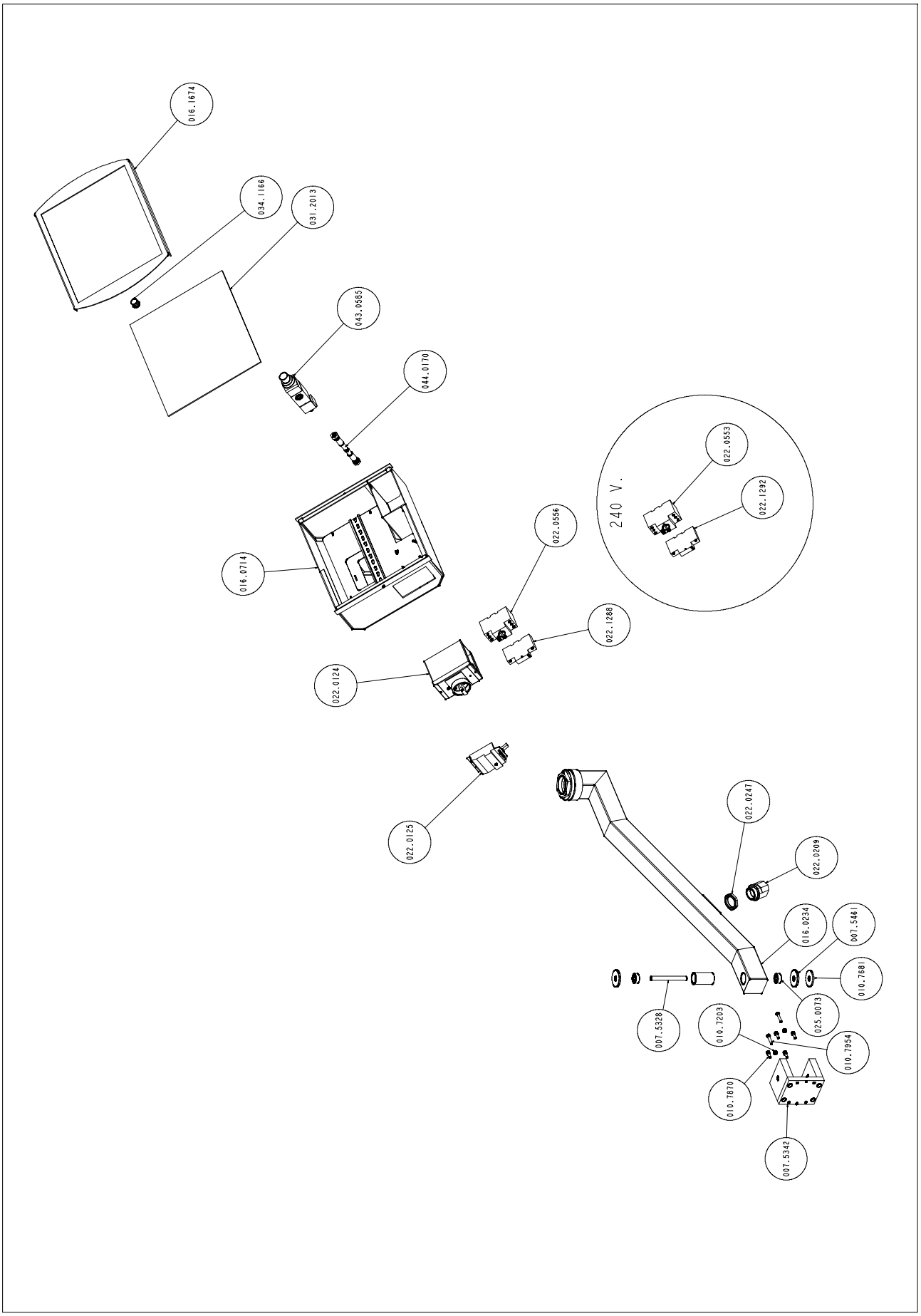

Code	Description	U. of M.	Quantity
007.5328	PERNO- CUSC- ASTA- MOB- SH420.PRT	NR	1
007.5342	SUPPORTO- ASTA- MOBILE- SH420.ASM	NR	1
007.5461	ROSETTA- ASTA- MOBILE- SH420.PRT	NR	2
010.7203	DADO- M6.PRT	NR	2
010.7681	ROSETTA- 13X48.PRT	NR	1
010.7870	M6X16- TCEI.PRT	NR	4
010.7954	M6X30- TE.PRT	NR	2
016.0234	ASTA- MOB- CONS- CON- GIUNTO- 452.ASM	NR	1
016.0714	QUADRO- COMANDI- SH- SXI- NT.ASM	NR	1
016.1674	CORNICE- QUA- COM- SXIEVO- NT.ASM	NR	1
022.0124	INTERRUTTORE- PKZ0- GR.ASM	NR	1
022.0125	BLOCCO- LUCCHETTO- SVB- PKZ0.ASM	NR	1
022.0209	PG- 29- KIEPE.PRT	NR	1
022.0247	DADO- POLIAM- HUMMEL- 262- 2900- 11.PRT	NR	1
022.0553	SGANCIATORE U- PKZ0 V.240.60 COD.73146	NR	1
022.0556	SGANCIATORE U- PKZ0 V.480.60 COD.73147	NR	1
022.1288	INTERRUTTORE PKZM0- 16 (TERMICA) COD.4693	NR	1
022.1292	INTERRUTTORE PKZM0- 25 (TERMICA)COD.4698	NR	1
025.0073	63001.PRT	NR	2
031.2013	CONSOLLE DI PROGRAMMAZIONE DM13/18P	NR	1
034.1166	MANOPOLA- X- COMANDO- POTENZ- 22MM.PRT	NR	1
043.0585	REG- DISC- TESTA- VALV- BYPASS- SXIE.PRT	NR	1
044.0170	TUBO- CENTR- MM6800DD.PRT	NR	1

Optional Discharge side adaptor

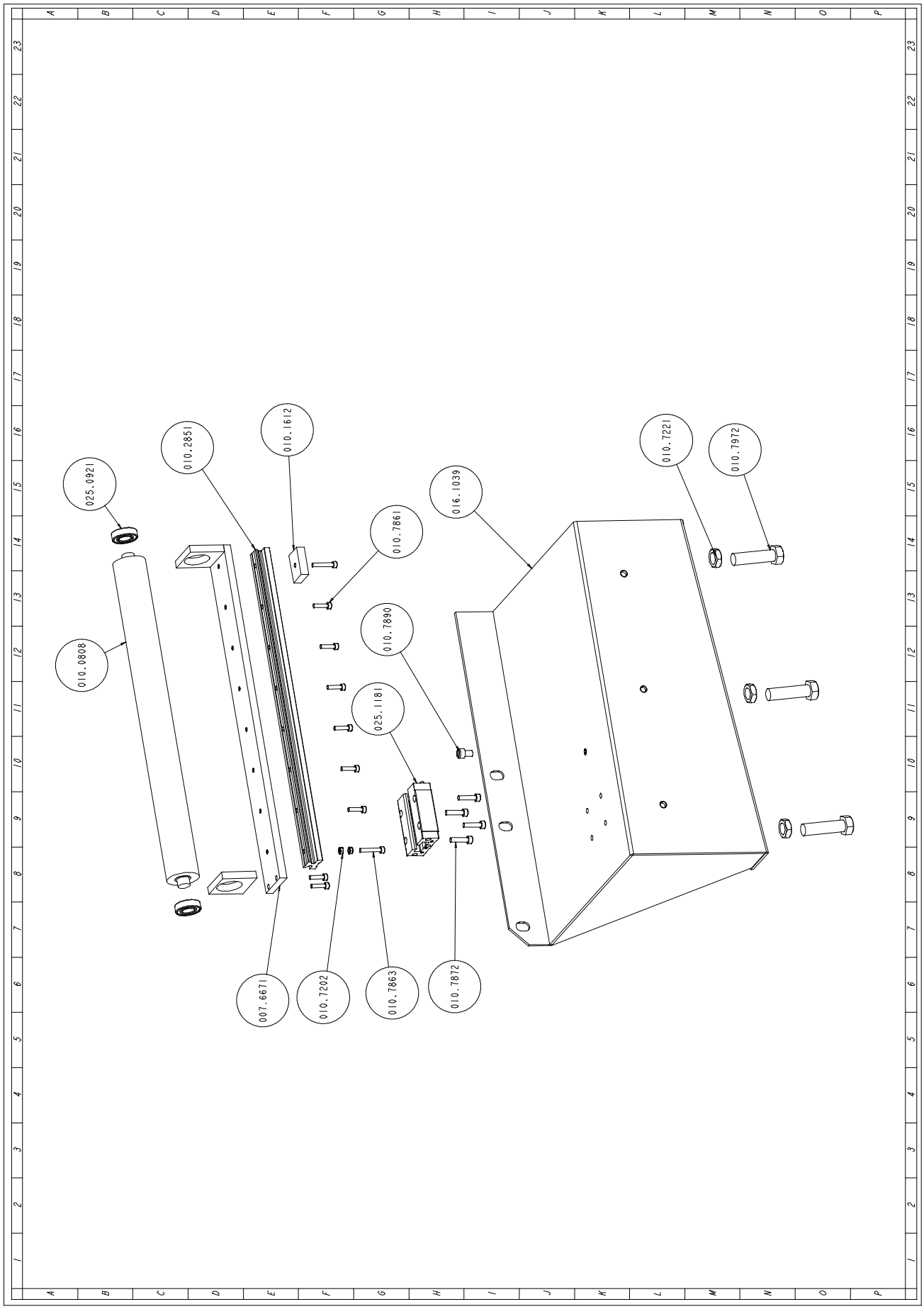

Code	Description	U. of M.	Quantity
007.6671	SUPPORTO RULLO BRACCETTO SHARK 452	NR	1,000
010.0808	RULLO DIAM.45 BRACC.CARICO SH 452	NR	1,000
010.1612	TASSELLO POLIZENE X BRACCETTO	NR	1,000
010.2851	GUIDA DRYLIN T TS- 01- 20 L.460 SH452	NR	1,000
010.7202	DADO M5	NR	2,000
010.7221	DADO M16 BASSO	NR	3,000
010.7861	VITE TCEI 5 X 20	NR	8,000
010.7863	VITE TCEI 5 X 30	NR	2,000
010.7872	VITE TCEI 6 X 25	NR	4,000
010.7890	VITE TCEI 8 X 12	NR	1,000
010.7972	VITE TE 16X60	NR	3,000
016.1039	BRACCETTO APPOGGIA BARRA SHARK 452	NR	1,000
025.0921	CUSCINETTO 6003 2Z	NR	2,000
025.1181	PATTINO DRYLIN T TW- 01- 20 X SH 452	NR	1,000

Vice assembly

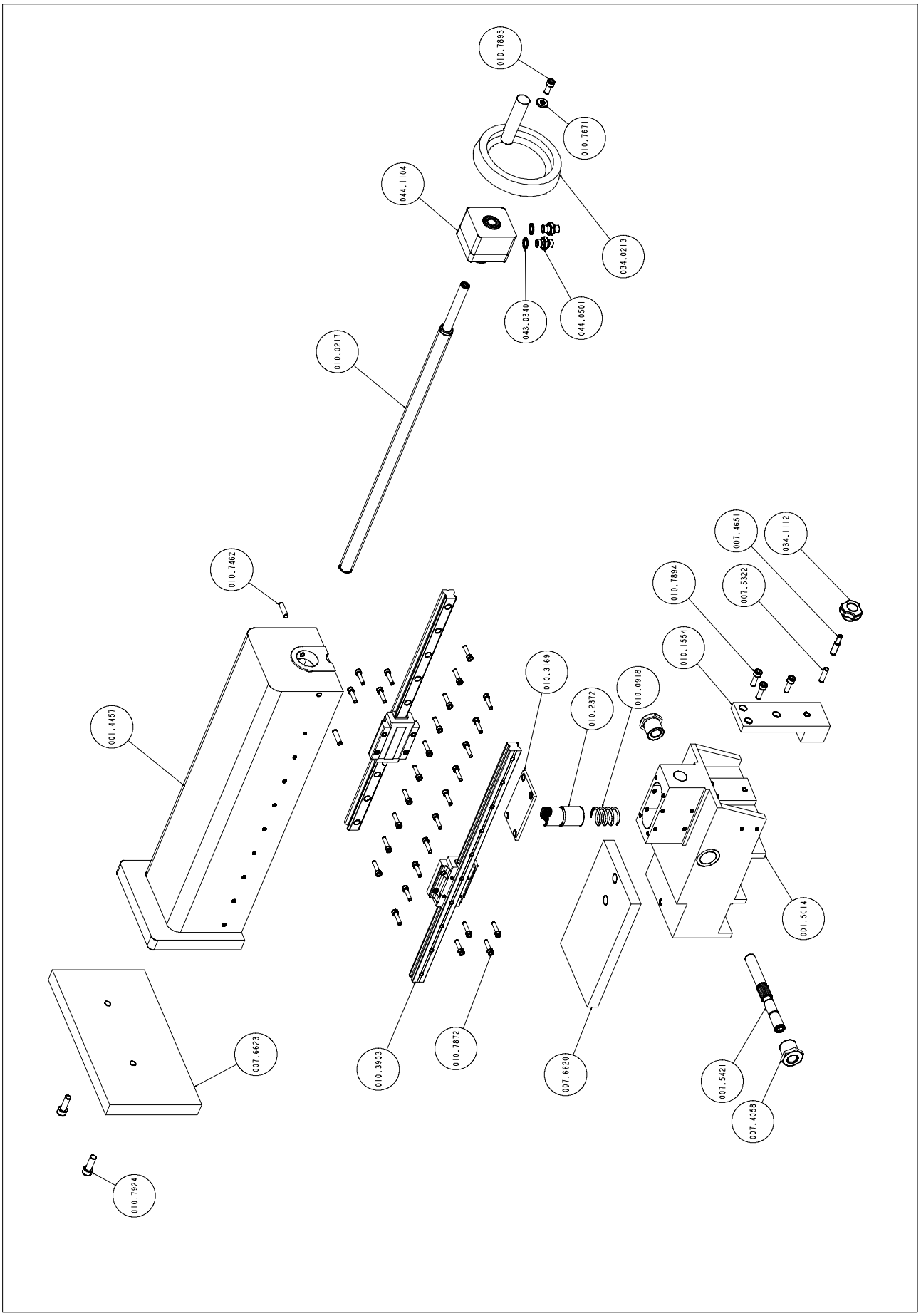

Code	Description	U. of M.	Quantity
001.4457	SCORREVOLE- MORSA- SH420- 452.PRT	NR	1
001.5014	SUPP- SCORREVOLE- MORSA- SH452- NT.PRT	NR	1
007.4058	007_4058.PRT	NR	2
007.4651	GRANO- BLOCC_PIANO- GIREVOLE.PRT	NR	1
007.5322	PERNO- STAF- BLOC- MORSA- SH420SXI.PRT	NR	1
007.5421	PIGNONE- SBLOCC- SCORR- SH420SXI.PRT	NR	1
007.6620	PIASTRA- APPOGGIO- PEZZI- SH512.PRT	NR	1
007.6623	GANASCIA- MORSA- MOB- SH452.PRT	NR	1
010.0217	VITE- MORSA- SH452- MA- MI.PRT	NR	1
010.0918	010_0918.PRT	NR	1
010.1554	STAFF- BLOC- MORSA- TAGL- SH420SXI.PRT	NR	1
010.2372	CHIOCCIOLA- MORSA- SH260- 280- 320.ASM	NR	1
010.3169	BATT- SUP- PATT- MORSA- SH420- 452.PRT	NR	1
010.3903	HSR25LA1SSC1S- 580L- E20.ASM	NR	2
010.7462	M8X30- VCEI- PC.PRT	NR	2
010.7671	ROSETTA- 8_4X3.PRT	NR	1
010.7872	M6X25- TCEI.PRT	NR	28
010.7893	M8X20- TCEI.PRT	NR	1
010.7894	M8X25- TCEI.PRT	NR	3
010.7924	M10X30- TCEI.PRT	NR	2
034.0213	VOLANTINO- DSH- CON- MAN- RIB- D- 160.PRT	NR	1
034.1112	VOLANTINO- DIA_40M8XPIED_SH- CO33.PRT	NR	1
043.0340	RONDELLA- RAME- 1_4.PRT	NR	2
044.0501	NIPPLO- NP- 1_4- IDRAULICO.PRT	NR	2
044.1104	VOLAMPRESS- IDR- MEGL.ASM	NR	1

Optional Discharge side adaptor

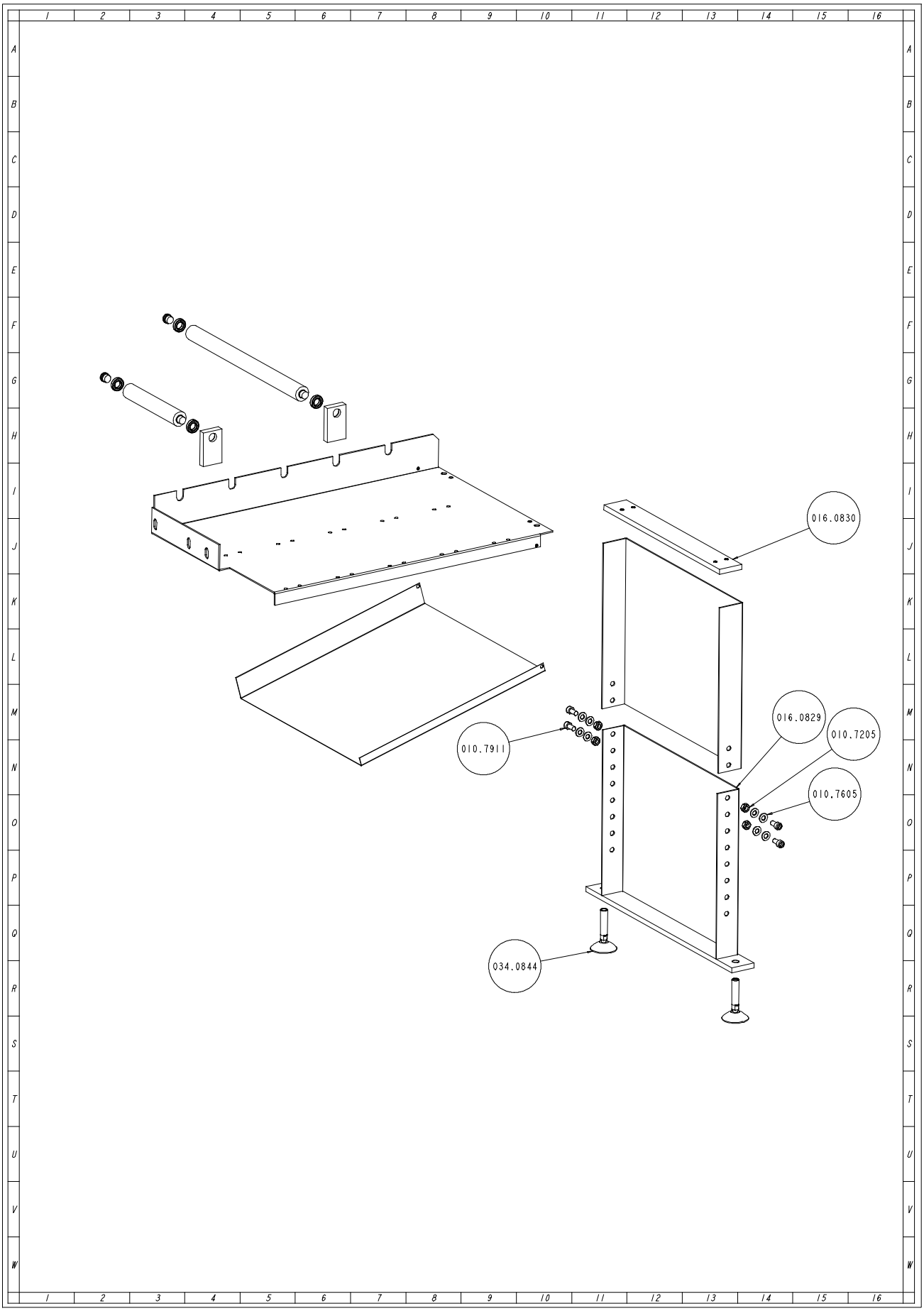

Code	Description	U. of M.	Quantity
010.7205	DADO M10	NR	4,000
010.7605	RONDELLA DIAM. 10	NR	8,000
010.7911	VITE TCEI 10 X 20	NR	4,000
016.0829	GAMBA TELESCOPICA INFERIORE K210	NR	1,000
016.0830	GAMBA TELESCOPICA SUPERIORE K210	NR	1,000
034.0844	PIEDINO COMPLETO DI DADO	NR	2,000

Optional: Cut angle viewer

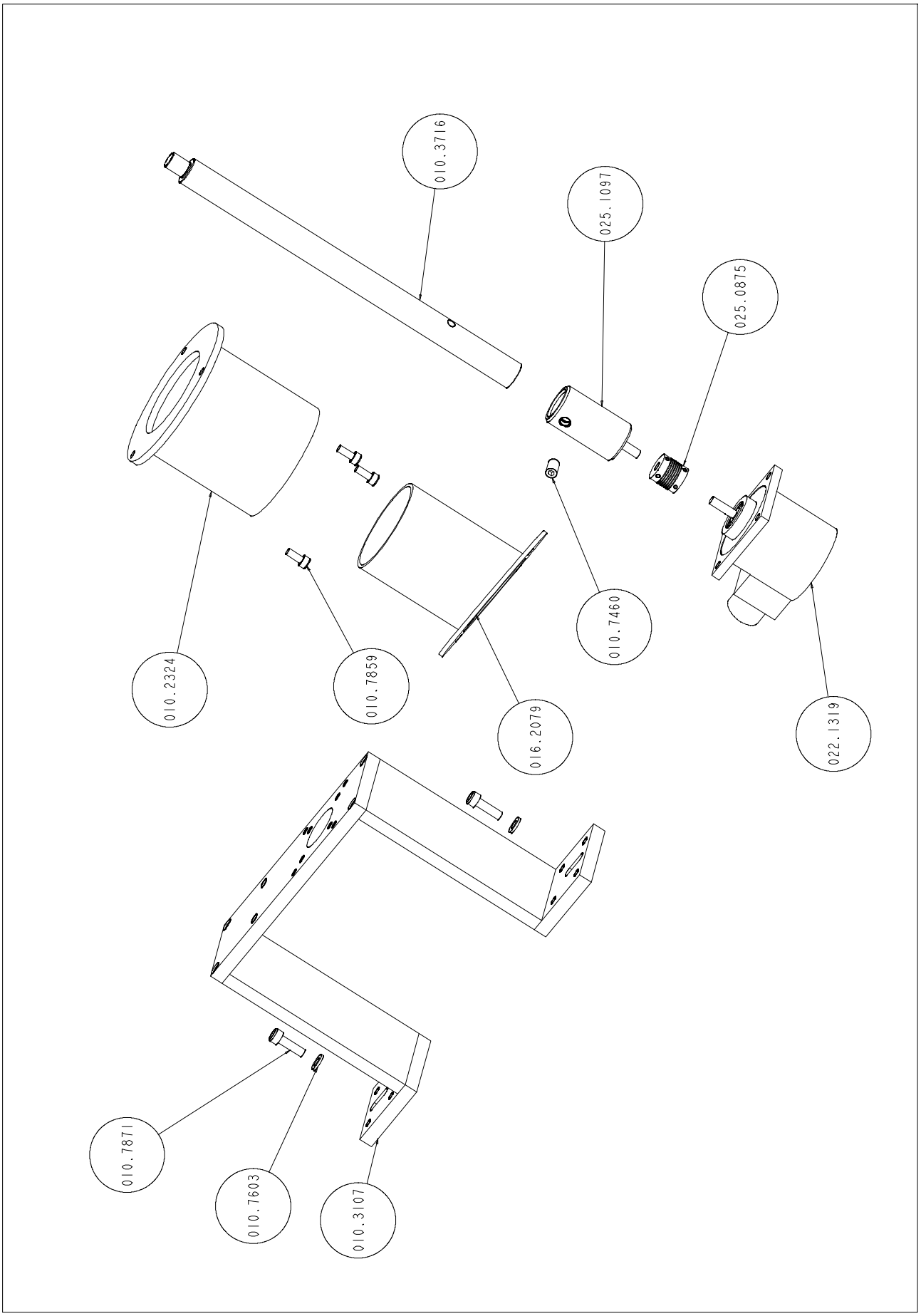

Code	Description	U. of M.	Quantity
010.2324	FLANGIA- COLLEG- ENC- PIATT- FIX- SH.PRT	NR	1
010.3107	SUPPORTO- ENCODER- VIS- TAGL- SH.ASM	NR	1
010.3716	PERN- TRASM- ANG- TAGL- SH452.PRT	NR	1
010.7460	M8X12- VCEI- PC.PRT	NR	1
010.7603	ROSETTA- 6_4X12_5.PRT	NR	2
010.7859	M5X12- TCEI.PRT	NR	3
010.7860	M5X16- TCEI.PRT	NR	8
010.7871	M6X20- TCEI.PRT	NR	2
016.2079	COLLARE- PER- BAS- SH452SXI.ASM	NR	1
022.1319	ENCODER- LIKA- AST614GA- 6- ERQ.PRT	NR	1
025.0875	GIUNTO- MA- 6- 6MM20X- V- ANGOLO.PRT	NR	1
025.1097	PIGNONE- ENCODER- VIS- TAGL- SH.PRT	NR	1

Adjustments

7

This chapter describes the operations required to adjust the electronic, mechanical and the hydraulic systems. By following these instructions, you can “customise” your machine to suit the type of cut required, thereby optimising cutting times.

Displaying and editing the set- up parameters

The machine set- up parameters may be programmed directly from the control console.

▶ Power up the machine at the main switch located on the left hand side.

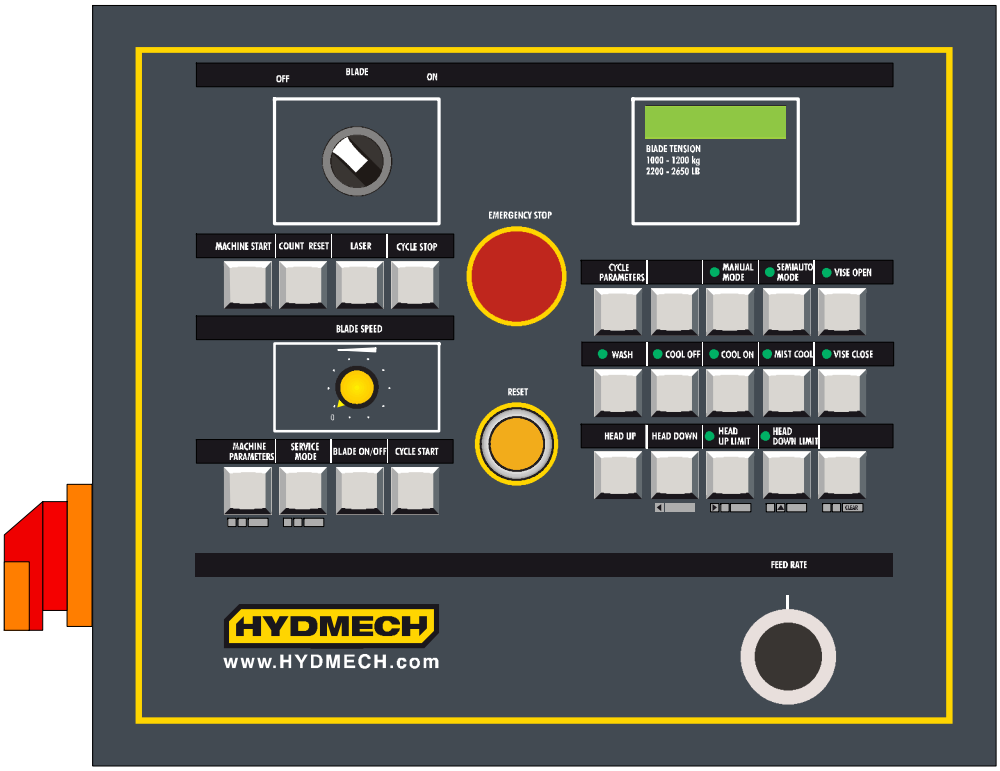

▶ Press simultaneously and in sequence the keys MACHINE PARAMETER and MACHINE START;

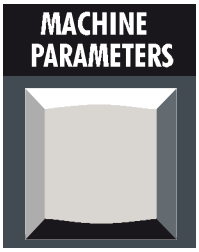

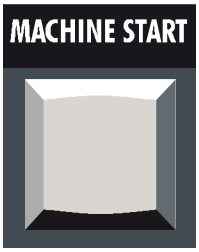

▶ Once inside the SET- UP menu, use the following three keys to navigate through

the different menu screens:

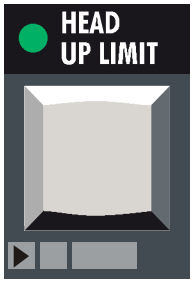

- The FCTA key (▲) allows you to change parameter settings in increments of one unit.
- The FCTI key (▶) instead has two functions: it is used to save parameter settings and navigate inside the SET-UP menu.
- The console or foot pedal START selection key allows you to zero the current parameter setting.
- The key "Y-" enables the cursor to return to the previous positions.
- To quit the SETUP parameters, press in sequence and simultaneously the MACHINE PARAMETER and MACHINE START keys.

Set language parameter

- Press ▲ to change the display messages presentation language.

LANGUAGE:

ENGLISH

Set parameter for machine type

- Press ▶ to display the parameter for the machine type. Press the ▲ key to change machine type; each press of the key corresponds to a different machine configuration.

MACHINE MOD.:

SHARK 422 SXI-EVO

Semiautomatic-Dynamic and Manual operation setting (optional)

- In this video page it is possible to configure the possible presence of optional operating cycles, such as the Manual and Semiautomatic-Dynamic cycle. Pressing the key ▶ go to the item of this parameter, then with the ▲ key choose YES or NO.

MAN&SAD CYCLE:

NO

Pedal control setting (optional)

▶ Press ▶ to display the pedal control parameter, then press ▲ to set the presence (YES) or the absence (NO) of this optional.

PEDAL START

YES

Optional inverter presence settings

▶ Press ▶ to display the inverter parameter and then press ▲ to set the presence or absence of this optional device by selecting ”yes” or ”no”.

INVERTER:

NO

Blade speed proximity settings

▶ Press ▶ to display the band speed detection proximity parameter, then press ▲ to set the presence or the absence of this optional, choosing YES or NO.

BLADE SPEED PROXY:

NO

Minimal lubrication system settings

▶ Press ▶ to display the min. lubrication system parameter, then press ▲ to set the presence or the absence of this optional, choosing YES or NO.

MIN. LUBR.:

NO

FCTI / FCTA digital output enabling setting

▶ Press the ▶ key to display the parameter enabling or disabling the outputs of the positions FCTI (backward head limit switch) and FCTA (forward head limit switch). Press the ▲ key to set YES or NO.

FCTI/A OUTPUTS

NO

Blade stop setting

▶ Press the ▶ key to display the blade stop parameter, then press ▲ to set the value of this parameter.
If the value is set as 2, the blade never stops;
if it is set as 1, the blade stops in the FCTI (backward head limit switch) point;
if the values is set as 0, the blade stops in the FCTA (forward head limit switch)

point.

BLADE MOTOR OFF
NEVER/FCTI/FCTA: 0

Cutting vice opening setting

▶ Press the ▶ key to display the parameter indicating if the shearing vice must open when the head is in the FCTI (backward head limit switch) point or in the FCTA (forward head limit switch) point; press ▲ to set the value as 0 (vice opening in FCTA), or as 1 (vice opening in FCTI).

CUTTING VICE OPENING
FCTA/FCTI: 1

Cutting vice opening/closing time setting

▶ Press the ▶ key to display the parameter indicating the time between the vice closing and the cut start and between the cut end and the vice re-opening. Press ▲ to change this value, ranging between 0.0 and 9.9 seconds.

VICE OPENING/CLOSING
TIME = 0.0

Machine maximum power input setting

▶ Press the ▶ key to display the parameter and then increase or reduce the value with the ▲ key.

MOTOR I MAX
BLADE = 00.0

N.B. The factory set values are relative to the motor installed on the machine.

Measurement unit setting

▶ Press the ▶ key to display the parameter, then press ▲ to set the value as 0 or 1, to choose the measurement unit expressed respectively in pounds or kilograms.

MEASUREMENT UNIT
FIPS/MKS = 0

Setting minimum blade tensioning

The machine will enter emergency mode if the band is not tensioned correctly. This parameter allows to set the minimum blade tension threshold (Kg 600);

Display backlighting time setting

▶ Press the ▶ key to display the LCD backlighting time parameter, then press the ▲ and ▶ keys to set the time expressed in minutes.

Cutting head stroke

The cutting head crosses the space between the forward and backward position definable in the SET- UP with the CUTTING HEAD POSITION parameter. A value between 000 and 254 must be set. Check that the bow, really and not virtually, crosses the amplitude of the cut between the structural limits of cutting head backward end run and cutting head forward end run. The scope of adjustment is to set the value of the real cutting head position both at FCTI (backward limit 252÷254) and at FCTA (forward limit 008÷012). Two adjustments are performed to obtain this result: one on the cutting head cylinder and the other on the IUD/IUV layout of the MEP 30 controller.
Operation sequences:

▶ Power the machine rotating the main switch on the left side of the console;

▶ Press simultaneously and in sequence the keys SERVICE MODE and MACHINE START;

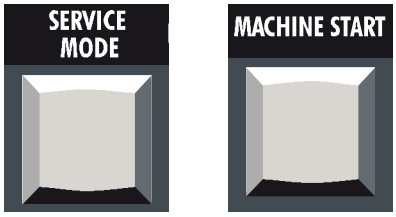

▶ Press the RESET.

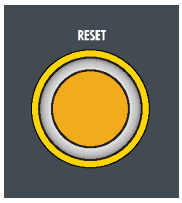

▶ scroll the machine parameters with the key indicated in the figure till reaching the following video page:

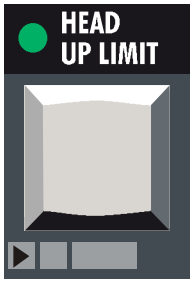

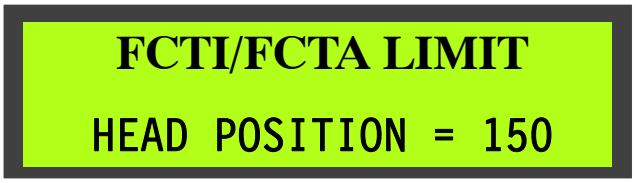

▶ Press the RESET.

▶ Press in sequence and simultaneously the â key and the key for the head lowering (Y-), position the bow completely downwards;

The down position must have a value ranging between 008 and 012, otherwise operate as follows:

▶ Remove the fixing screws from the black box on the cylinder using a hex wrench.

▶ Remove the box protecting the potentiometer, taking care not to tug at the connection cables.

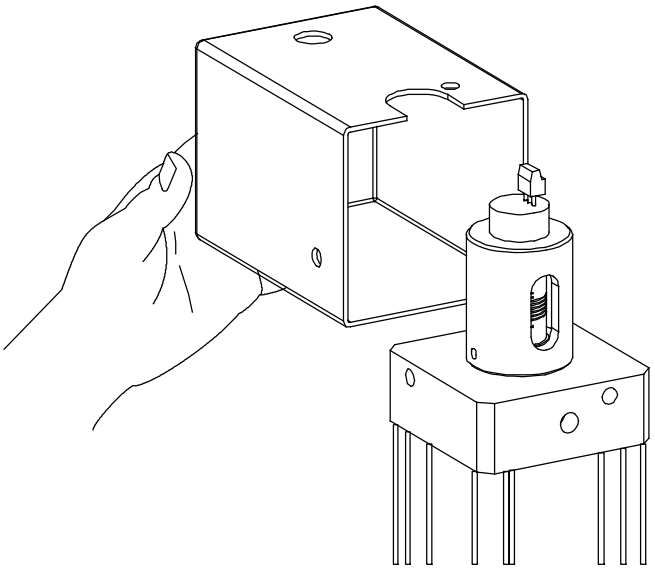

▶ Using an Allen key, slacken the grub screws fixing the rod and free the potentiometer body.

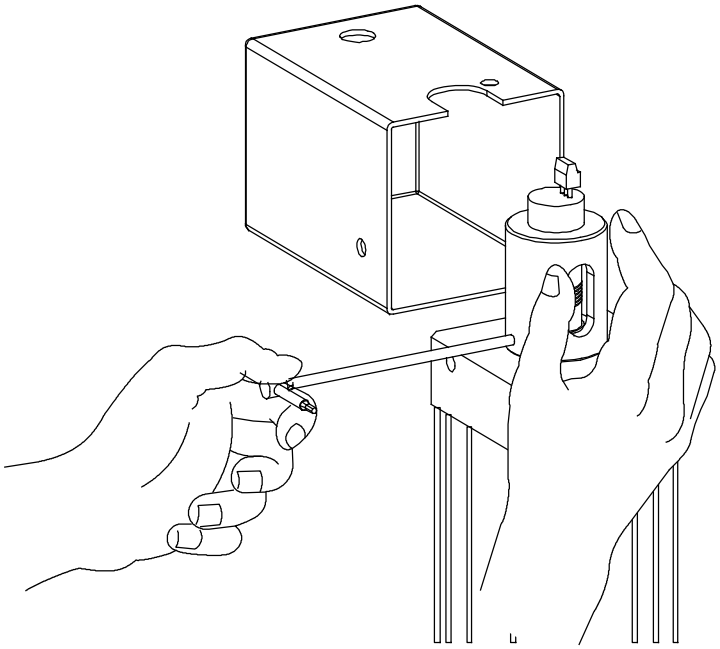

▶ Manually rotate the potentiometer body until the display readout is between 008÷012.

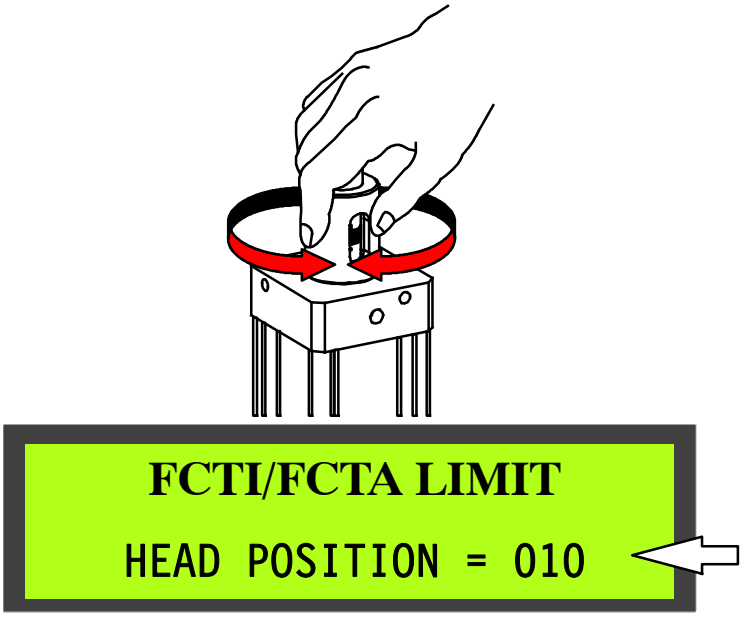

- Lock the potentiometer support in place using the grub screw. Close the cylinder box and tighten down the screws.
- Press the SERVICE MODE and MACHINE START keys in sequence and simultaneously.
- Set the FCTI point, taking the head completely backwards pressing in sequence and simultaneously the CYCLE PARAMETERS key and the key for the HEAD UP (Y+).
- Open the control board removing the frame and pull the keyboard out of the console;
- Identify the board IUD/IUV of the controller MEP 30 to adjust the potentiometer indicated by the arrow in the following image:

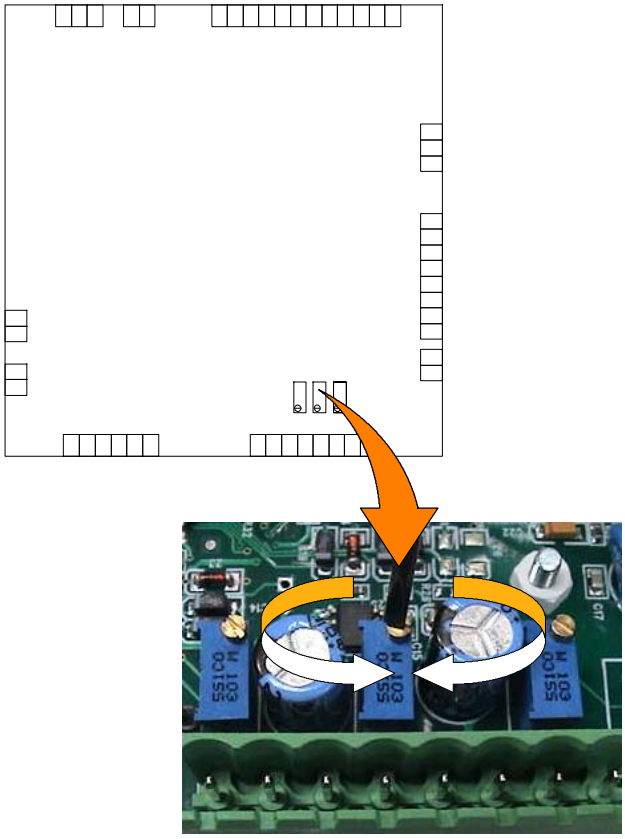

▶ Three potentiometers are mounted on the IUD/IUV card. Adjust the adjustment screw of the potentiometer indicated by the arrow by a screw-driver at a value of 252÷254; the obtained variation is displayed on the machine.

▶ Press simultaneously and in sequence the keys MACHINE PARAMETERS and MACHINE START to quit the SETUP parameters:

▶ Test to make sure it is functioning correctly.

Software version and total use time of the machine

▶ This parameter indicates the installed software version and the total working time of the machine.

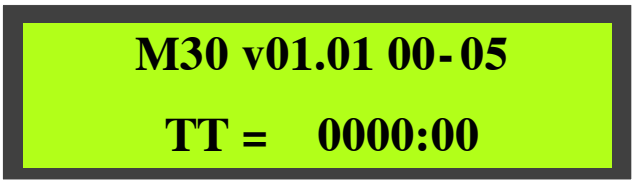

Adjusting the display brightness

If external factors like changing ambient lighting conditions in the machine installation site, affect visibility, adjust the brightness of the control and programming console display. This is very important since the operator must be able to clearly read the display messages at all times.

▶ To adjust the brightness, first remove the screws fixing the front console panel. The photo below illustrates the MEP 30 controller card on which the brightness potentiometer is marked by an arrow.

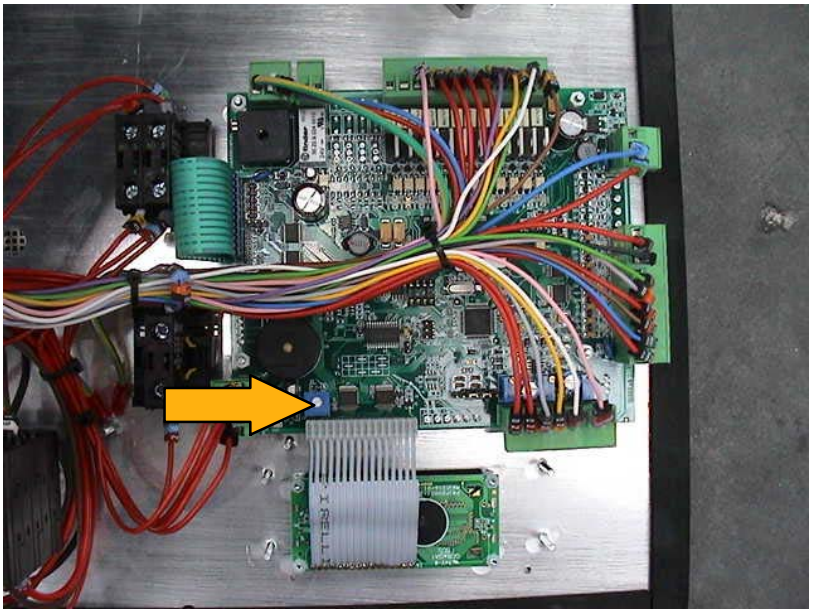

▶ Using a screwdriver, rotate the potentiometer until the required display brightness is obtained.

Machine working pressures

This section describes the procedures to change the vice and head operating pressures. Both adjustments strongly depend on the material type being processed.
The vice locking pressure can be set if the material could be strained or could be quite unstable while cutting.
The head lowering speed can be set by a flow adjuster on the control console.

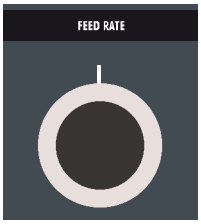

Hydraulic pressure

Both vice and head pressures can be adjusted by the power packs.

Warning

Both the pneumatic and hydraulic vices have a maximum travel of 8 mm. This means that after positioning the workpiece on the work table and before starting the cycle, the moving jaw must be positioned to within 2÷3 mm of the workpiece as previously described in Chapter 5.

The operating pressures (shearing vice and cutting head) can be adjusted by the max. pressure adjusting valve.

- ▶ Open the door of the machine base, remove the fastening screws and pull out the power pack from inside the base.
- ▶ Slacken the hex nut on the relief valve, and using an Allen key, increase (clockwise) or reduce (counter- clockwise) the pressure reading on the pressure gauge.

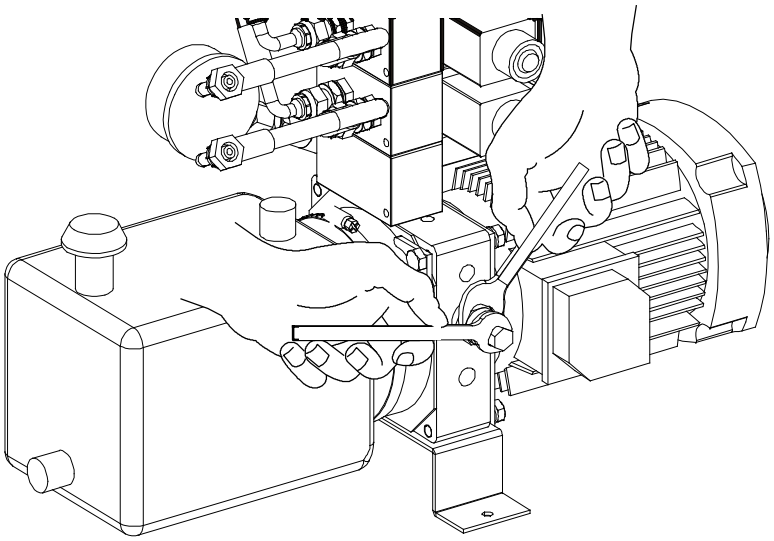

- ▶ This done, tighten the lock nut and return the hydraulic power pack back inside the base.

Cutting head

Blade tensioner slide play adjustment

To reduce the play which may develop over time between the blade tensioner slide and slide gibs, adjust the grub screws between the gibs and slide as follows:

- ▶ open the cutting head cover;
- ▶ un-tension the band with the relevant hand-wheel:
- ▶ remove the blade from the flywheels;
- ▶ remove the plug connecting the slideway to the cylinder rod;
- ▶ move the slide back and forwards to locate any friction or excessive play;
- ▶ slacken the nuts, using a tubular nut driver to hold the grub screws firm;

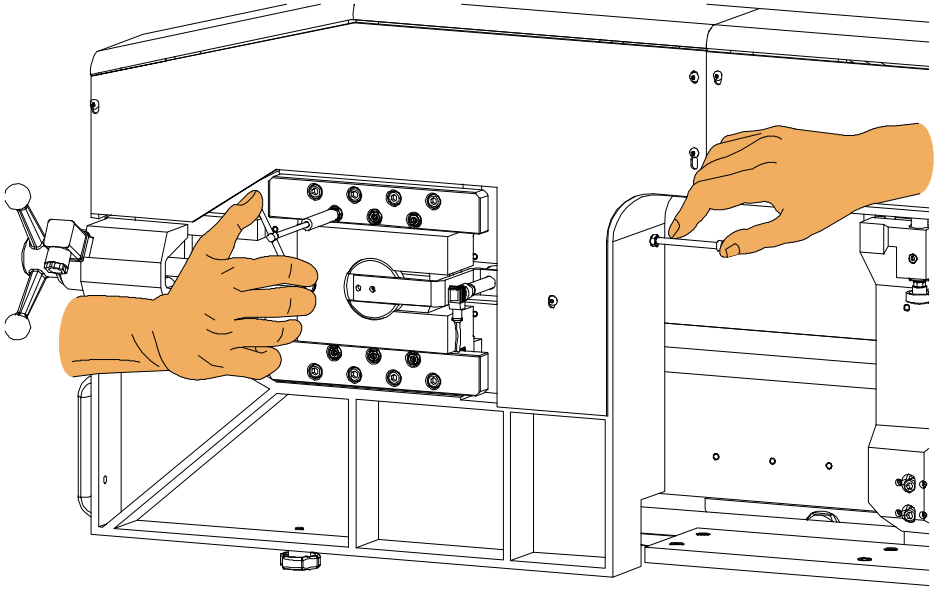

- ▶ finally, tighten the grub screws to take up any play or otherwise, slacken them to reduce any friction.

Blade guide components

Band saw blades offer enormous advantages to cutting applications, without requiring any special skills by the operator. A description follows of the blade guide adjustments required to ensure correct operation of the saw.

Blade guide heads

The first blade adjustment involves adjustment of the heads. The blade guide heads comprise the blade guide plates which ensure correct longitudinal alignment, the blade steady buttons which control vertical blade flexure and the coolant delivery cocks.

Blade steady buttons

The blade steady buttons prevent upward blade flexure caused by the vertical action of the cutting force. These buttons are fitted on both the front and rear heads and need no adjustment.

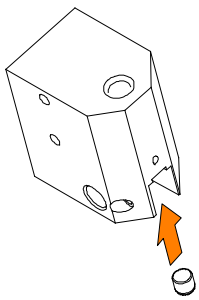

Blade guide plates

The plate contact points feature widia inserts which guide the blade longitudinally. A small amount of play must exist between the plates and blade to ensure that the blade runs smoothly and perpendicular to the work table.

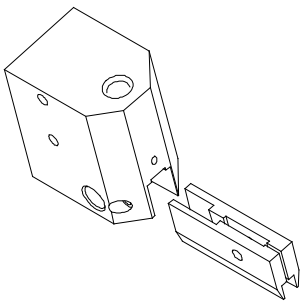

Thanks to the widia inserts, the working life of the guide plates is practically the same as that of the machine itself. However, if due to wear or the assembly of a new blade with a different thickness, the following adjustments must be made:

- ▶ disconnect the machine from the power supply;
- ▶ slacken the blade tension using the handwheel;

- open the front blade guard by undoing the fixing screw and rotating it as illustrated in the figure below;

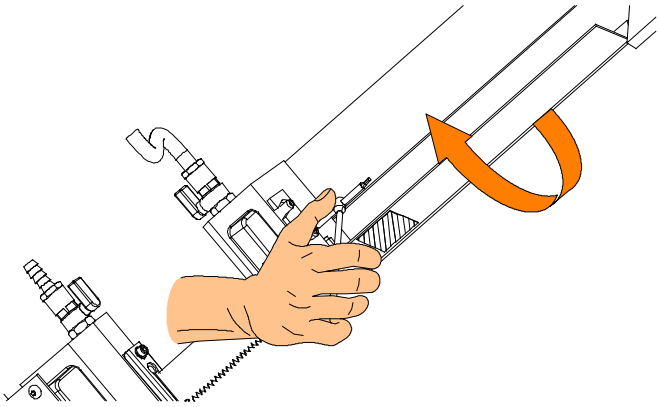

- wear protective gloves when making this adjustment;
- make sure there is a small amount of play between the blade and guide plate inserts;

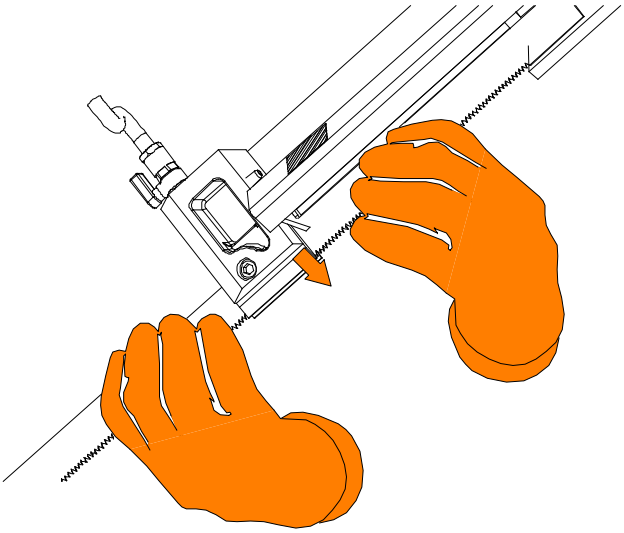

- if the amount of play is not sufficient for the blade to run smoothly, adjust the locking torque of the two grub screws with an Allen key;

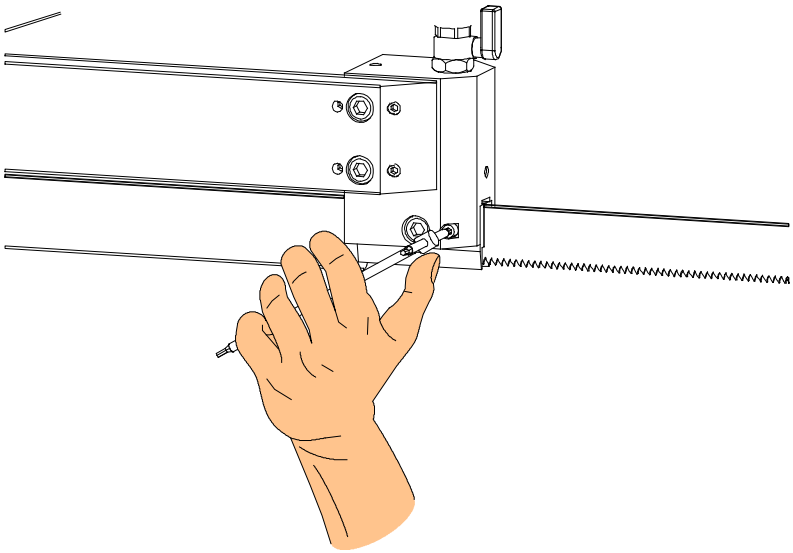

- replace any worn plates by removing the plate fixing screw;

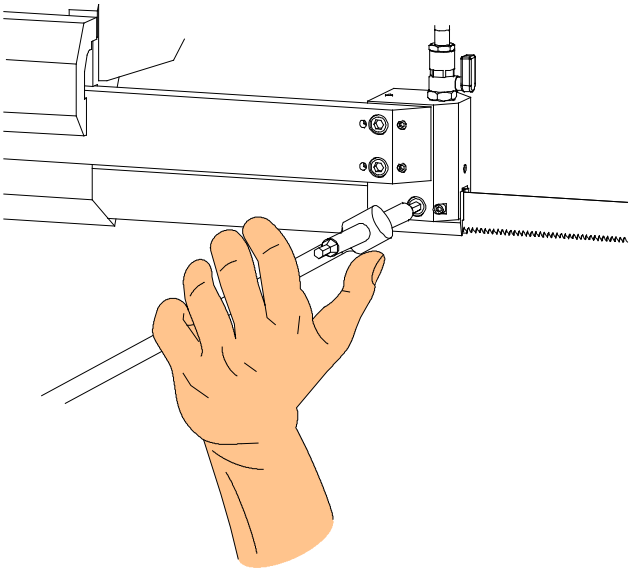

- repeat the above sequence of steps on the rear blade guide head;
- refit the front blade guard;
- tension the blade and power up the machine again.

Blade

The adjustments required to ensure correct operation of the blade are described below. For further information regarding band saw blades, refer to Chapter 9 which provides a more detailed description of the different types of blade.

Tool changeover

Optimum working conditions both enhance operator safety and extend the tool service life. The cutting tool should in any case be replaced when poor cutting performance starts to affect productivity. The tool changeover procedure is described as follows:

Warning In case of machine in emergency, or simply to lower the cutting head without starting up belt rotation, close the cutting head descent regulator completely and press the START button, then gradually open the cutting head descent regulator. If the machine has version HH, perform the same operations by pressing the mushroom- shaped EMERGENCY button and the START button at the same time.

- ▶ disconnect the machine from the power supply;
- ▶ Wear protective gloves when changing the blade;
- ▶ open the cutting head cover by unscrewing the two knobs and hooking it onto the galvanised lever on the back of the head;

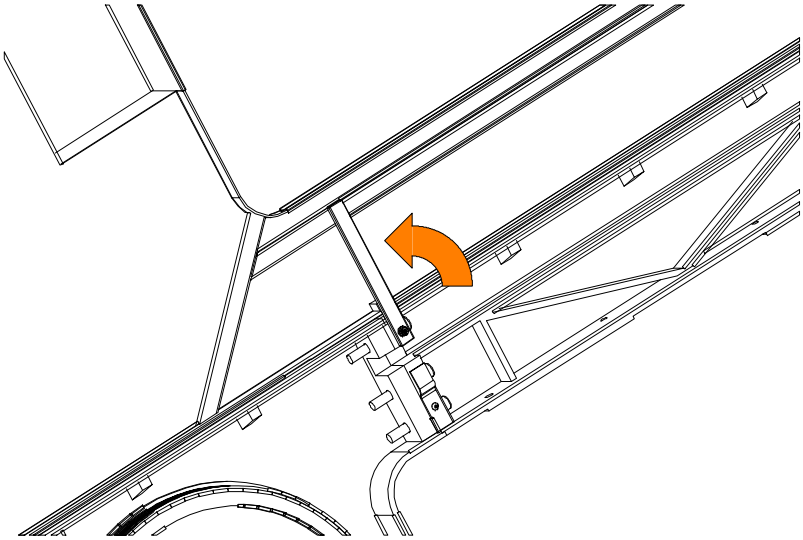

- ▶ un- tension the band using the relevant hand- wheel;

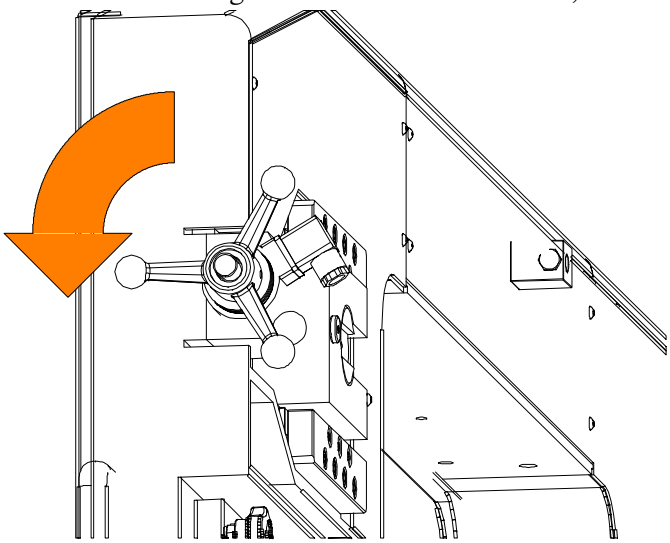

- ▶ remove the blade cleaning brush by removing the two TCF1 fixing screws;

- open the front blade guard by undoing the fixing screw and rotating it as illustrated in the figure below;

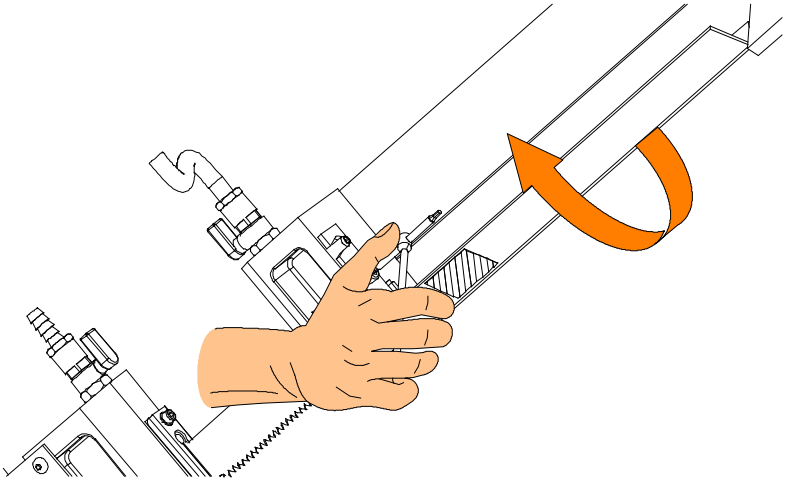

- remove the rear blade guard by undoing the two fixing screws using an Allen key;
- Remove the worn blade by sliding it off the flywheels and front and rear heads;
- fit the new blade into the front blade guide head;
- make sure the back of the blade is facing the flywheel stop and that the teeth along the lower part of the blade are inclined towards the head pivot.
- Make sure there is a small amount of play between the blade and guide plate inserts;

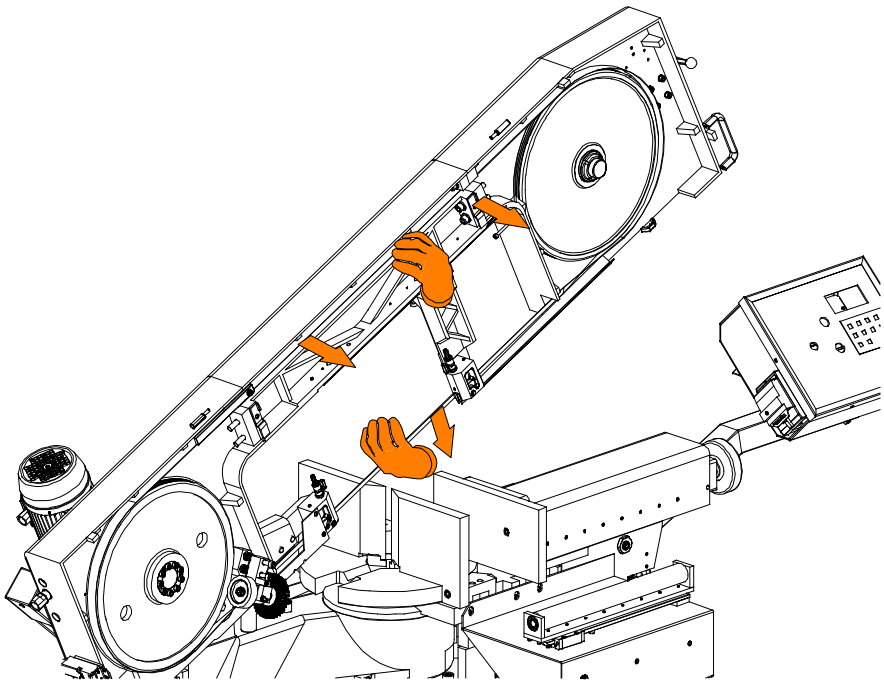

- repeat the above sequence of steps on the rear blade guide head;
- fit the blade on the flywheels and remount the front and rear blade guards;
- close the cutting head cover, correctly tension the blade and power up the machine.

Blade perpendicularity

The perpendicularity of the blade to the work surface plus the blade tension are vital for achieving straight cuts. This adjustment is carried out with the help of a goniometer and a workshop square which should be placed adjacent to the blade resting on the work surface.

- ▶ disconnect the machine from the power supply;
- ▶ open the cutting vice;
- ▶ position the square on the cleaned work surface and rest it against the blade close to the right hand vice jaw at a point where the blade teeth do not prevent contact;

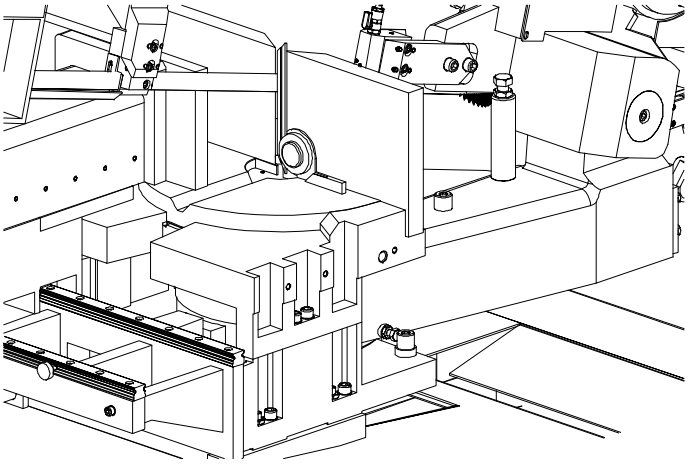

- ▶ Slacken the head fixing screw (A) and adjust the two grub screws (B) if the blade touches the square at the bottom. If the contact point is instead located at the top of the square, slacken screw (A) and tighten grubs screws (B) to the same torque until the blade is perpendicular to the square.

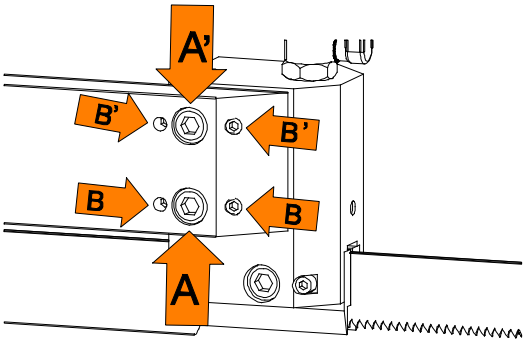

- ▶ Position the square on the relative surface near the front head.

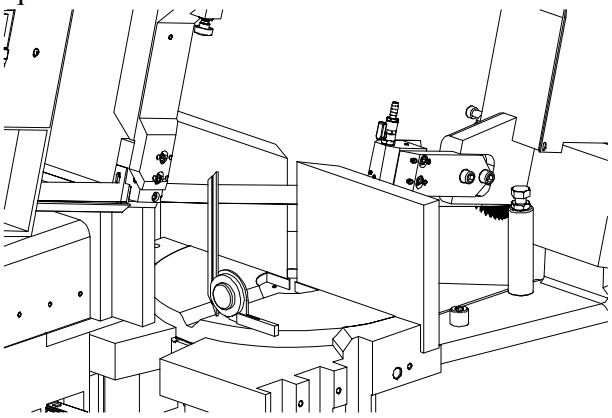

- ▶ Repeat the squaring sequence described above on the front head.

Blade orthogonality

The procedure for correcting and adjusting the blade to 0 degrees in order to make cuts at right angles to the fxed vice jaw. To make **orthogonal adjustments at 0°**, use a workshop goniometer or a simple 90° square. Operation sequence:

- ▶ place the head in the lowest position;
- ▶ Position the goniometer or square against the fixed vice jaw adjacent to the blade;

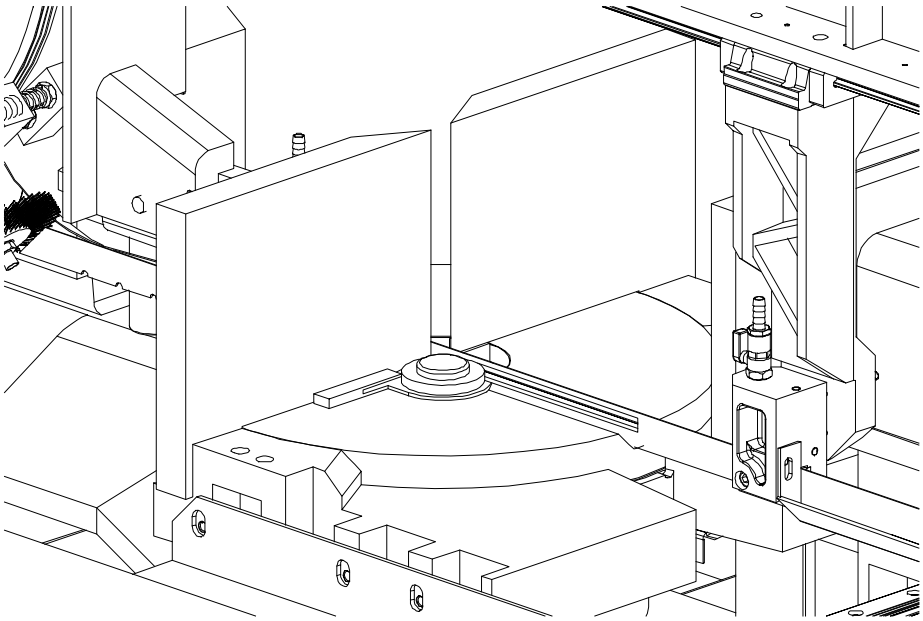

If an error in orthogonality is found, realign the blade guide heads as follows:

- ▶ loosen the TCEI head locking screws (A- A) and uniformly adjust grub screws (B- B) until blade orthogonality in relation to workpiece rest shoulder, is obtained.

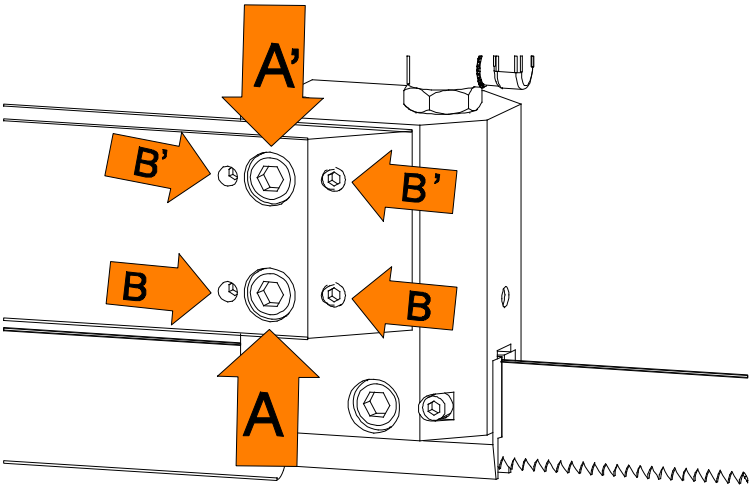

- ▶ After adjusting, check and restore blade perpendicularity.

Rotation axis control

Pulleys must be adjusted in their coplanarity. The adjustment is aimed at ensuring the belt rotation, keeping approx. 4 mm of distance from the point of the belt teeth to the pulley machined surface. This prevents an early wear of the belt.

- ▶ Slacken the blade tension and open the cutting head cover;
- ▶ slacken the grub screw and, using a mallet, tap the shaft in or out;
- ▶ finally, close the cover and set the blade in motion;
- ▶ check the distance between the blade and edge of the wheels;

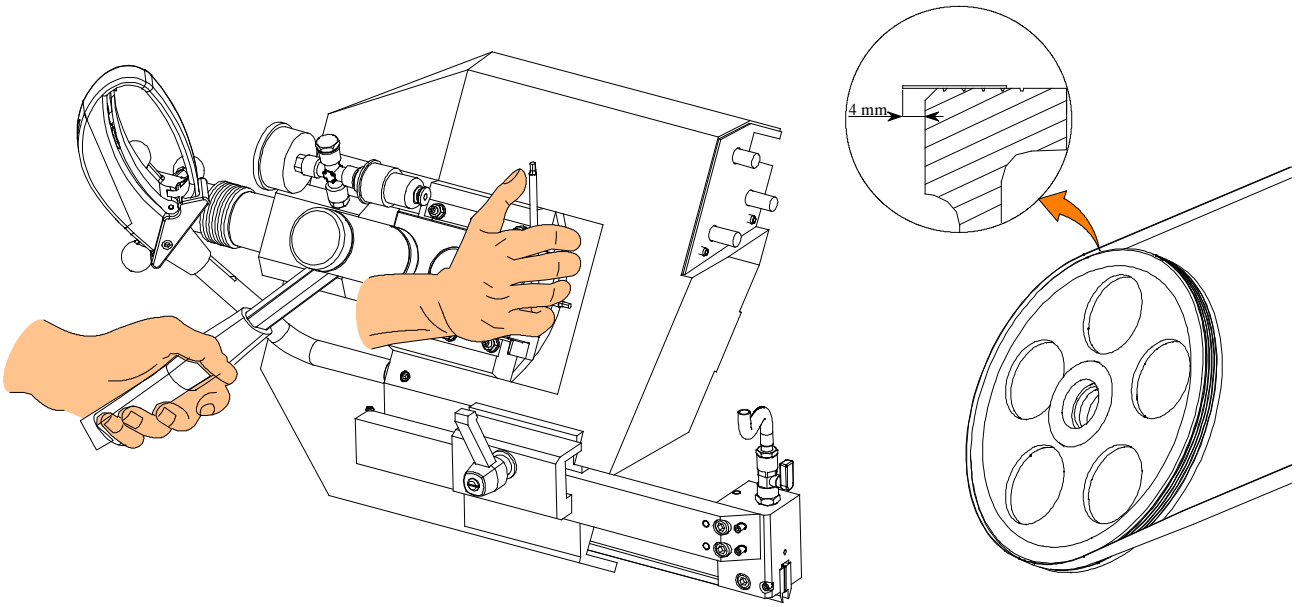

- ▶ if necessary, repeat the operation till getting the correct position.

Rear flywheel alignment is closely linked to adjustment of the front flywheel.

- ▶ Adjust by loosening all pulley locking screws and moving the pulley manually inwards or outwards according to the distance of the blade from the pulley machined surface. Tighten the screws again and check the coplanarity making the belt turn a few times.

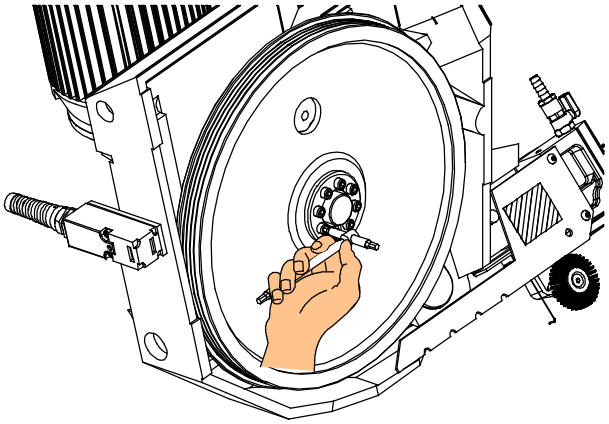

Maintenance and choice of consumables

8

DM- 1318P is built to be sturdy and long- lasting It has no need of any special maintenance, though, like all other tools, it needs adjusting from time to time, especially if not regularly looked over or used without due care.

This chapter, therefore, is intended as a guide for those who want to look after the machine and get the most out of it for as long as possible.

The role of the operator

The person operating and maintaining the machine must follow these instructions for his own safety, as well as for the safety of other personnel, and in the interests of machine productivity:

- check that his own work and that of the other operators of the machine always complies with the relevant safety standards. Therefore, check that the safety devices are in position and work perfectly and that personal safety requirements are complied with.
- Ensure that the working cycle is efficient and guarantees maximum productivity, checking:
  - the functions of the main components of the machine;
  - the sharpness of the blade and coolant flow;
  - the optimum working parameters for the type of material.
- Check that the quality of the cut is that required and that the final product does not have any machining defects.

Maintenance requirements

- All ordinary and extraordinary maintenance must be carried out with the power switched off and the machine in emergency condition.
- To guarantee perfect operation, all spare parts must be MEP S.p.A originals.
- On completion of maintenance works, ensure that the replaced parts or any tools used have been removed from the machine before starting it up.
- Any behaviour not in accordance with the instructions for using the machine may create risks for the operator.
- Therefore, read and follow all the instructions for use and maintenance of the machine and those on the product itself.

General maintenance

Daily

The daily maintenance operations to carry out on the machine are as follows:

▶ remove all swarf from the machine (preferably with a non- fibrous cloth);

▶ empty the swarf drawer (this is located on the right side of the base);

▶ top up the lubricant/coolant level;

▶ check state of blade wear and replace if necessary;

▶ check the blade cleaning brush, clean and relocate; if worn, replace;

▶ at the end of the working day, decrease tension in the blade to 550 Kg to avoid unnecessary and harmful strain on the tool.

Weekly

The weekly maintenance operations are as follows:

▶ remove all swarf;

▶ clean the vice and lubricate all joints and sliding surfaces with a good quality oil;

Monthly

This section lists the operations to be carried out for the monthly maintenance of the machine:

- check the perpendicularity of the blade to the work surface; if it is necessary to adjust the blade setting, follow the instructions set out in Chapter 7;
- check on blade orthogonality with respect to the workpiece rest shoulder; if adjustment is necessary, proceed as instructed in Chapter 7;
- check that the 0° notch on the work table is in line with the graduation on the turntable; if not, readjust by regulating the 0° stop; then re- check that the blade is perpendicular and orthogonal;
- check the precision of the 45° and 60° right stops and the 45° left stop; if out- of- set, adjust following the steps indicated in Chapter 7;
- check the state of the widia inserts and the blade steady button; replace if worn or chipped; check their positions and adjust if necessary (see Chapter 7);
- thoroughly clean the bottom of the water tank and the electropump filter.

Maintenance of working parts

Maintenance personnel working on the **DM- 1318P** must pay particular attention to operating components such as the blade tensioning cylinder (already dealt with in Chapter 7), loading, the air treatment unit and the pneumatic vice. No maintenance is required for the worm screw reduction gear fitted on the machine.

Lubrication

The DM- 1318P was designed to minimize the maintenance requirements. Moving assemblies and contact faces need lubrication on a regular schedule whether they are in heavy use or not. The lubrication requirements of the DM- 1318P are primarily the saw pivot point which is equipped with a grease fitting, and metal to metal surfaces that require lubrication to prevent wear and seizure. General purpose industrial grease is suitable for application.

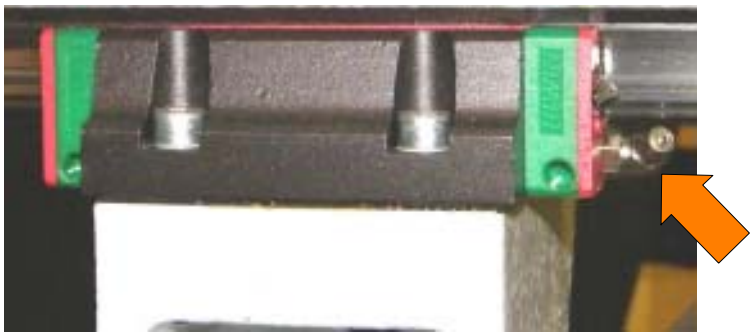

Guide arm grease nipple

Drive shaft grease nipple

Idler shaft grease nipple

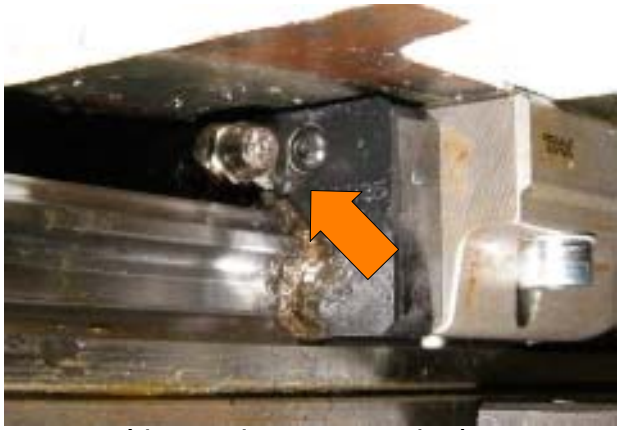
Linear vise grease nipple x2

Pivot grease nipple x2

Consumable materials

It is essential to use specific oils for the pneumatic and lubricant/coolant circuits. The oils suitable for each of these circuits are listed below.

Oils for oleopneumatic circuit

The machine can be equipped with a worm gear which is permanently lubricated and therefore maintenance- free. This gear type has no filler cap, level checker and drain, as it already contains the correct quantity of synthetic oil, guaranteeing perpetual lubrication of the crown and worm gear. Otherwise, the machine can be equipped with a worm gear having filler cap, level checker and drain to top the oil up if necessary. Below, there is a short list of synthetic oils for permanent lubrication:

BP Energol SG XP220 - KLUBER Syntheso D220EP - ESSO Glycolube Range 220 - IP CT614 - SHELL Tivela Oil SC 320 - FINA Girans.

Oils for hydraulic circuit

The machine is supplied with FOX YE 32 oil. This oil is used by the head cylinder and hydraulic power packs. The following oils may also be regarded as compatible or having equivalent specifications:The machine is supplied with FOX YE 32 oil. This oil is used by the head cylinder and hydraulic power packs. The following oils

may also be regarded as compatible or having equivalent specifications:

API Cis 22 - ARAL Dural SR 22 - CASTROL Hyspin AWS 22 - ESSO Spinesso 22 - IP Hydrus oil 22 - TOTAL Azolla ZS 22 - VALVOLINE ETC 22 - MOBIL Velocite oil D - Mobil DTE 22 - MOBIL ATF 220 - OLIO FIAT HTF 22 - Q8 Haydn 22 - SHELL Tellus oil 22 - BP AUTRAN GM- MP.

- reservoir capacity 2,5 litres

Oil for lubricant/coolant fluid

The oil used for the machine lubricant/coolant fluid is CASTROL Syntolin TFX. Though there are no specific standards for these types of oils, MEP considers that the above product has the best price/quality rapport. The following oils can also be said to have similar characteristics and are therefore compatible:

AGIP NB 200 - SHELL Lutem TT - IP Utens Fluid- F

Finally, a lubricant/coolant guaranteed and distributed by a band saw manufacturer (LENOX) is BAND- ADE SAWING FLUID LENOX.

- tank capacity Lt. 82
- oil concentration 5- 6 %

Oils for spray mist system (optional)

The oil type used for the machine spray mist system is the cutting oil: Blaser Vascomill F 22.
Though there are no specific standards for these types of oils, MEP considers that the above product has the best price/quality rapport. The following oils can also be said to have similar characteristics and are therefore compatible:

SHELL MACROM 401 F22 - AGIP ESTRAMET F20

Cutting speed and choice of tools

9

The cutting speed is determined by the blade speed and the head feed speed. While the head speed is provided by the downstroke movement of the head, the blade rotation speed can either be fixed or variable. When using the **DM- 1318P**, it is important to select the correct type of blade for the material to be cut. This chapter explains the limitations and specific applications of the different types of blades.

Cutting speed

Standard machine

The basic version with 4 pole motor, is provided with the following cutting speeds:

- 1st speed = 15 ÷ 100 m/min

Inverter technical specifications	
Protection rating	IP 31
Vibration and shock resistance (EN50178)	0.6 gn from 10 to 50 Hz 2 gn from 50 to 150 Hz
Max. relative humidity	93% without condensation or drop- forming
Acceptable Temperature Range (EN 50178)	For warehouse storing: from - 25° C to +65° C For operating purposes: from - 10° C to +40° C
Max. altitude	1000mt. with no derating
Supply	- single phase: 200V - 15% to 240V + 10%
	- three phase: 200V - 15% to 230V + 10% 380V - 15% to 460V + 10%
Frequency	50/60 Hz ± 5%
Output voltage	Maximum voltage equal to the supply voltage
Output frequency range	0,5 przy 320 Hz
Max. transients	150% of electronic speed control rated current for 60 secs.
Frequency resolution	- Display: 0.1 Hz - Analog inputs: 0.1 Hz per 100 Hz max.
Switching frequency	Adjustable from 2.2 to 12 Hz max.

Inverter technical specifications	
Electronic speed control protection and safety devices	Short circuit protection: - of available internal supplies; - between U- V- W output phases between phase and earth for calibres from 5.5 to 15Kw
	Thermal protection against overheating and overcurrents
Motor protections **Motor protections**	Protection integrated in the electronic speed control with 1^2t calculation
	Protection integrated in the electronic speed control with 1^2t calculation
Motor protections	Protection integrated in the electronic speed control with 1^2t calculation

Choice of blade

When using band saws to cut metals, an important factor is the choice of pitch, i.e. the number of teeth per inch (25.4 mm.), which must be suitable for the workpiece material. The following recommendations may be taken as general guidelines:

- thin- walled materials, such as sheet steel, tubes and profiles require a fine pitch frequency. 3 to 6 teeth should be engaged in the breadth of the material at any one time;
- large section cutting requires a coarse pitch to cope with the higher volume of swarf and optimal tooth penetration;
- soft materials (aluminium alloys, soft bronze etc.) also require a coarse tooth pitch.

Saw tooth pitch

The choice of teeth per inch, therefore, depends on various factors:

- the size of the section;
- the hardness of the material;
- workpiece wall breadth.

Very large dimensions require coarse teeth, while small dimensions require finer teeth. Whatever the case, ensure that there are always at least six teeth engaged in the cut, with reference to the thinnest vertical walls positioned transversally to the blade.

Cutting speed and downstroke speed

The cutting speed (m/min) and the downstroke speed (cm^2/min) are limited by the heat generated around the points of the teeth. If the downstroke speed is too high, the cut will not be straight, either vertically or horizontally. The cutting speed depends, as indicated above, on the tensile strength of the material (kg/mm^2), its hardness (HRB) and the thickness of largest sections. The downstroke speed depends on the material thickness. Therefore, large- section, solid or thick- walled materials (s > 5 mm), can be cut at high speeds, providing there is sufficient swarf removal from the blade; thin- walled materials, such as slim piping or profiles, must be cut using low and especially constant downstroke speeds. A new blade must be worn in, which in effect means lowering the downstroke speed to about half that of normal (from 60 to 70 cm^2/min on normal steels), equal to a removed surface area of about 300 - 600 cm^2.

Types of swarf:

- Very fine or fragmented swarf indicates that the downstroke speed and/or cutting pressure is too low.

- Thick and/or blue swarf indicates that the blade is overloaded.

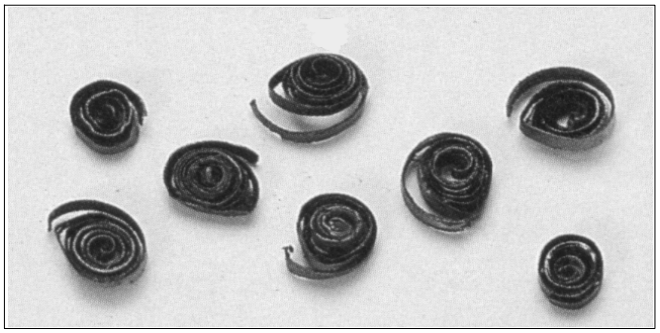

- Long coils of swarf indicate ideal cutting conditions.

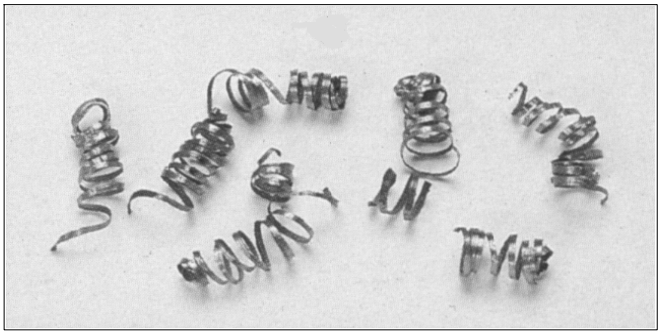

Lubricant/coolant fluid

The lubricant/coolant fluid must ensure so that neither the saw teeth nor the work piece material in the cutting zone overheat. Furthermore, there must be a sufficient quantity and pressure of lubricant/coolant to remove swarf from the cutting zone. The lubricant/coolant fluid must be of the highest quality in order to prevent tooth abrasion and welding of swarf to the teeth themselves (seizing).

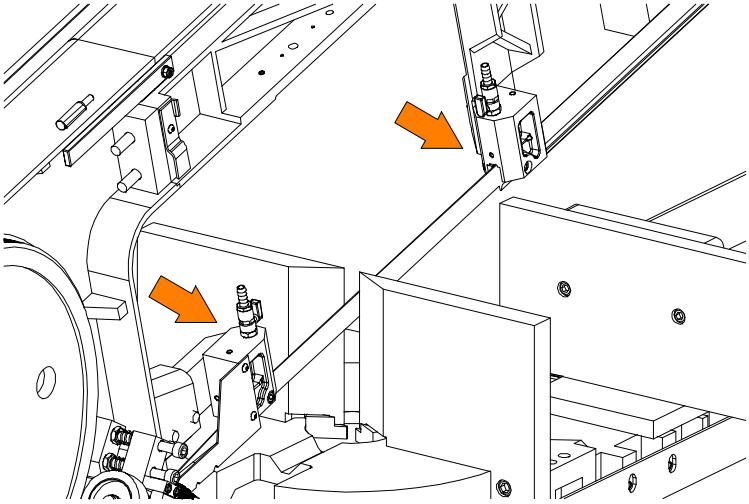

Blade structure

The most commonly used blades are the bimetal types, i.e. manufactured with a silicon steel body and having a high fatigue strength, and super high- speed steel teeth; the two parts are welded by electronic or laser- welding.

Standardised teeth types are termed M2 and M42; the difference being that M42 teeth are harder due to the addition of cobalt to the steel used to make the teeth.

Key									
Mo	Molybdenum	Ni	Nickel	Si	Silicon	V	Vanadium	W	Tungsten
Al	Aluminium	C	Carbon	Co	Cobalt	Cr	Chromium	Mn	Manganese

TYPE OF BLADE	C	Mn	Si	Cr	W	Mo	V	Ni	Co	Al	HRC
	0,47	0,75	0,22	1,00		1,00	0,12	0,52		0,08	45- 50
HSS M2 HRC 65- 66 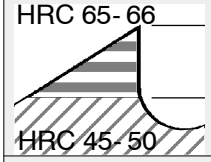 HRC 45- 50	0,85	0,25	0,30	4,15	6,37	5,00	1,92				64- 66
HSS M42 HRC 67- 68 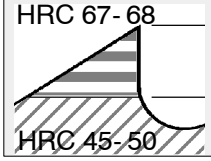 HRC 45- 50	1,07	0,25	0,20	3,75	1,50	9,50	1,15		8,00		67- 69

N.B. The numbers in the columns indicate the % content of the element in the steel.

Blade types

The blades mounted on the **DM- 1318P** are 4500 x 27 x 0,9 mm the length can vary between 4460 mm. and 4540 mm thanks to the blade tensioner device. The blades, however, apart from size and tooth pitch, are differentiated by other geometrical characteristics which determine their specialised uses:

- tooth cutting angle (rake), can be 0 or positive;
- the tooth pitch can be constant or variable;
- the set, i.e. the various teeth alignments, have many possible configurations.

Conventional rake

Cutting angle 0°, constant pitch.

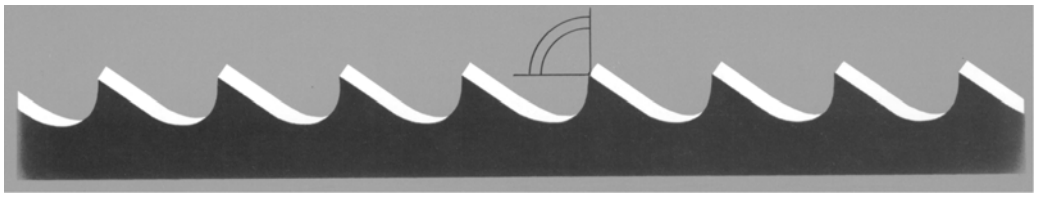

In general use, for small or medium section cast iron or steels and rolled materials, for straight or angled cuts.

Positive rake

Positive cutting angle 9- 10°, constant pitch.

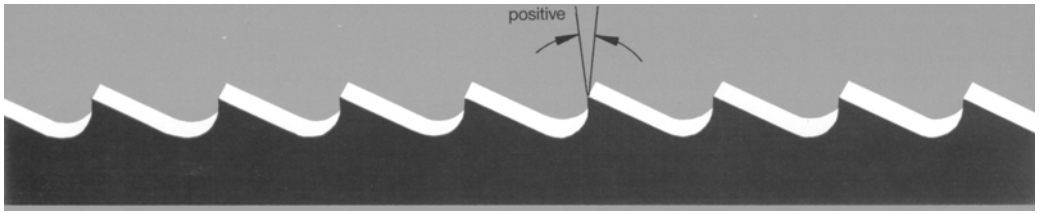

Can be used for cutting all types of materials, and is particularly suited to low- carbon and non- ferrous steels. Used for cutting very large sections and diameters.

Variable pitch

These blades have groups of teeth having different pitches and, as a consequence, have various tooth dimensions and differing relief angles. These are also available in M2 and M42 types with zero and positive rakes. The alternation of the different types of teeth helps to prevent vibration and noise. Elimination of vibration increases the useful life of the tool and improves the cut surface finish.

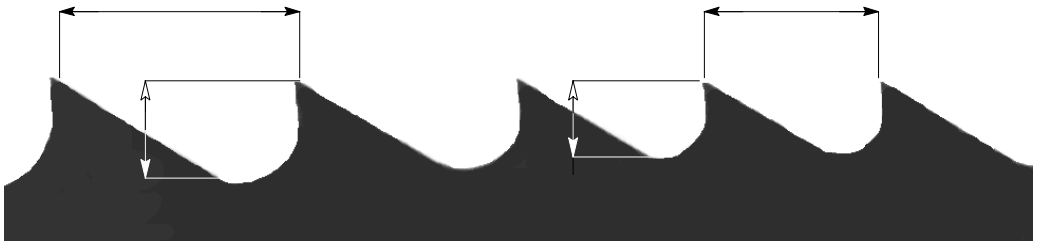

A further advantage in using these types of blades lies in the fact that a wide range of different material types and dimensions can be cut with the same blade.

Variable pitch blades with 0° cutting angle

This type of tooth formation is ideal for cutting single pipes or medium size bundles, in accordance with the capacity of the machine.

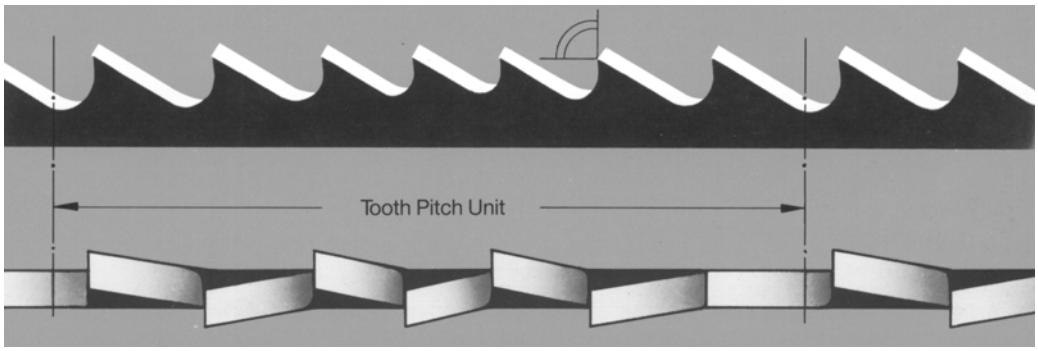

Pitches available: 3- 4 / 4- 6 / 5- 7 / 5- 8 / 6- 10 / 8- 12 / 10- 14.

Variable pitch with positive rake (from 9 to 10 degrees)

This toothing type is the most suitable for cutting large dimension pipes and profiles, including large sections, as well as for cutting solid sections up to the machine capacity limit.

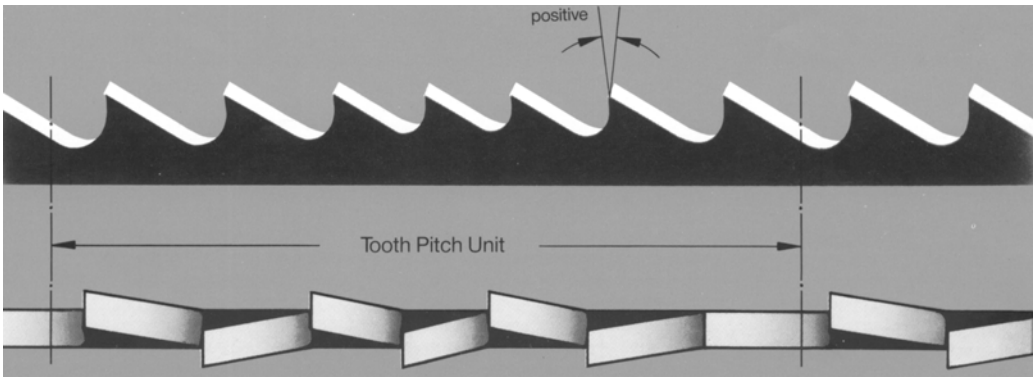

Pitches available: 3- 4 / 4- 6.

Set:

The term set refers to the section of material removed by the blade during the cutting operation, i.e. relating to width of cut and the offset position of the teeth with respect to the blade back.

Standard or splayed set

This term is used to describe an alternated angling of the teeth: one to the right, one to the left and one straight.

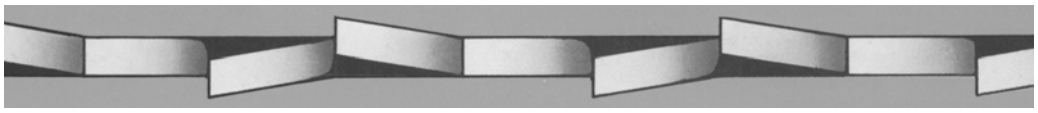

For general use on materials over 5 mm. thick. Suitable for cutting steels, castings and non- ferrous hard materials.

Undulated set

Used to describe groups of teeth undulating alternatively to the right and left.

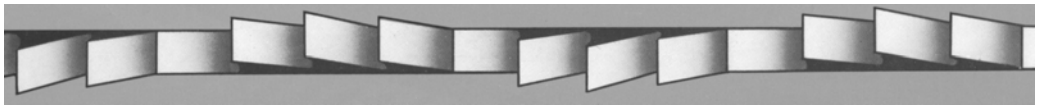

This type of set is used with very fine teeth for cutting thin pipe walls and small- section profiles (from 1 to 3 mm).

Alternating grouped sets

These are groups of teeth angled to the right, one straight tooth, then a further group angled to the left.

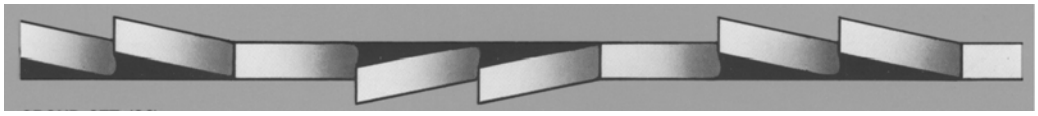

This set is used for very fine teeth for cutting very thin sections (less than 1 mm).

Alternating set

This set is one tooth to the right followed by one to the left.

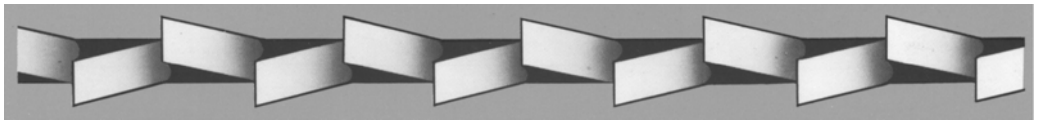

This set is used for soft non- ferrous materials, plastics and wood.

Blade selection table relating to cutting speed and downstroke speed

Cutting material	Cutting speed mt./min	Dimensions of the cutting section S (mm)												Lubrication	sq. mt./min. cut
		S10		10S30		30S50		50S80		80S120		120S230			
Structural steel Casehardened steel Steel for turning Mild steel	50 / 70	14	10 / 14	10	10 / 14	8	6 / 10	6	5 / 8	4	4 / 6	3	3 / 4	Emulsible oil Cutting fluid	60 - 70
High- duty cast iron Rolled steel Spring steel	40 / 50	14	10 / 14	10	10 / 14	8	6 / 10	6	5 / 8	4	4 / 6	3	3 / 4	Emulsible oil	50 - 60
Alloy steel Tool steel Valve steel	30 / 40	14	10 / 14	10	10 / 14	8	6 / 10	6	5 / 8	4	4 / 6	3	3 / 4	Emulsible oil Cutting fluid	15 - 20
Stainless steel Nodular cast iron	30 / 40	14	10 / 14	10	10 / 14	8	6 / 10	6	5 / 8	4	4 / 6	3	3 / 4	Emulsible oil	15 - 20
Copper Soft bronze	90 / 150	14	10 / 14	10	10 / 14	6	5 / 8	4	4 / 6	3	3 / 4	3	3 / 4	Emulsible oil	75 - 90
Brass	90 / 300	14	10 / 14	10	10 / 14	6	5 / 8	4	4 / 6	3	3 / 4	3	3 / 4	Emulsible oil	80 - 90
Hard bronze	20 / 40	14	10 / 14	10	10 / 14	6	5 / 8	4	4 / 6	3	3 / 4	3	3 / 4	Emulsible oil	25 - 40
Aluminium	80 / 800	14	10 / 14	6	10 / 14	4	4 / 6	3	3 / 4	3	3 / 4	3	3 / 4	Emulsible oil	70 - 80
Plastics	90 / 400	14	10 / 14	6	10 / 14	4	4 / 6	4	4 / 6	3	3 / 4	3	3 / 4	Emulsible oil	80 - 90

Blade pitch **Number of teeth per inch**

Classification of steels

This page provides a table giving the user specific information on the cutting materials, in order that they can be classified on the basis of their hardness, and thus the correct tool can be selected for the task in hand.

Types of steel				Hardness		
UNI	DIN	BS	AISI	Brinell HB	HRB	kg/mm2
C 22 - C 35	CK 22 - CK 3	En 2 C - En 6	1022 - 1035	160 - 170	34 - 87	55 - 59
C 45	CK 45	En 8	1040	160 - 180	84 - 89	55 - 61
C 10 - C 15	CK 10 - CK 15	En 32 A - En 328	1010 - 1015	150 - 175	81 - 87	51 - 59
C 60	CK 60	En 9	1060	160 - 180	84 - 89	55 - 61
		4360 - 50 A		160 - 180	84 - 89	55 - 61
	17100	3706 - 1.2.3.	ASTMA - 36/68	160 - 180	84 - 89	55 - 61
45 Cr Si 9	17115	4360		160 - 180	84 - 89	55 - 61
		En 20 A		190 - 215	91 - 97	64 - 73
34 Cr Mo 5	17221	970 - 1955	1065	180 - 205	89 - 94	61 - 69
		En 18 B	5135 - 5145	180 - 200	89 - 93	61 - 67
35 Cr Mo 4	34 Cr Mo	En 19 B	4135	200 - 230	93 - 99	67 - 77
	36 Ni Cr 6	En 111	3135	190 - 230	91 - 99	64 - 77
		En 36	3310 - 3315	200 - 230	93 - 99	67 - 77
20 Nc Cr Mo 2		En 362	4315	200 - 225	93 - 98	67 - 75
		En 100 D	8645	190 - 220	91 - 97	64 - 74
	1880 X C 95	DX	W 1	150 - 190	80 - 91	51 - 64
100 Cr 6	100 Cr 6	En 31	52100	210 - 230	96 - 99	71 - 77
		B 2	L 6	190 - 230	91 - 99	64 - 77
52 Nc Cr Mo KU	56 Ni Cr Mo V 7			217 - 248	97 - 102	73 - 83
	2750 (280W18)	18 % W	T 1	217 - 248	97 - 102	73 - 83
		1507 - 825	1310	160 - 220	84 - 91	55 - 64
		A 2	M 13	200 - 230	93 - 99	67 - 77
	210 Cr 46	A 1	D 3	215 - 240	97 - 101	73 - 81
	4845	En 58 G	309 S	150 - 200	80 - 93	51 - 67
X 12 Cr 13	4001	En 56 A	410	150 - 200	80 - 93	51 - 67
X 6 Cr Ni 1810	4301	En 58 E	304	130 - 170	74 - 86	45 - 58
X Cr Ni 1910						
X 8 Cr Ni Mo 1713	4401	1501 - 845	316	160 - 200	84 - 93	55 - 67
Phosphor bronze				60 - 100	56,5	36
Aluminium bronze				70 - 90	49	32
Manganese bronze				95 - 120	51 - 69	34 - 42
Silicon bronze				70 - 100	56,5	36

Classification of steels

Material						
Carbon steels	1311 1572	1015 - 1035	C 22 - C 35 20 Mn 5 - 28 Mn 6 CK 22 - CK 50	050 A 20 080 M 46 - 50 120 M 19 150 M 28	C 15 - C 35 C 22 Mn C 28 Mn	XC 18 XC 38 H 1 20 M 5
Carbon steels	1650 1880	1040 - 1064 1770 - 1880	CK 60 - CK 101 36 Mn 5 Cm 45 - Cm 55	060 A 40 - 060 A 96 070 M 55 080 A 40 - 080 A 62	C 45 - C 60	XC 60 - XC 75 40 M 5 XC 42 H 1 XC 55 H 1
Alloy steel	2120 2255	1335 - 1345 4130 - 4140	25 Cr Mo 4 - 42 Cr Mo 4	1717 CDS 110 708 A 37 708 M 40	25 Cr Mo 4 - 42 Cr Mo 4	25 CD 4 42 CD 4
Alloy steels	2541 2230 2258	4337 - 4340 50100 - 52100 6145 - 6152 8630 - 8645	40 Ni Cr Mo 6 40 Ni Cr Mo 73 34 Cr Ni Mo 6, 100 Cr 6	735 A 50, 534 A 99 817 M 40 311 typu 6 i 7	40 Ni Cr Mo 2 - 40 Ni Cr Mo 7 30 Ni Cr Mo 8 - 35 Ni Cr Mo 6 KB 50 Cr V 4, 100 Cr 6	35 NCD 6 50 CV 4 100 C 6
Tool steels	2310 - 12 2754 - 55	D - 2, D - 3	X 210 Cr 12 X 155 Cr V Mo 121	BD 2, BD 3	X 205 Cr 12 KU X 155 Cr V Mo 121 KU	Z 160 CVD 12 Z 200 C 12
Tool steel	2550 2710	S - 1	60 W Cr V 7 55 Ni Cr Mo V 6	BS 1	55 W Cr V 8 Ku 55 Ni Cr Mo V 6	55 NCVD 7
Stainless steels	2324 2333	201, 202 302, 304	X 2 Cr Ni 189 X 5 Cr Ni 189 G - X 2 Cr Ni 189	304 S 15 304 C 12 304 S 12	X 2 Cr Ni 18.11 X 5 Cr Ni 18.10 G - X 2 Cr Ni 19.10	Z 2 CN 18.10 Z 6 CN 18.09 Z 3 CN 19.10
Stainless steel	2343 2353	314, 316 317	X 15 Cr Ni Si 2520 X 5 Cr Ni Mo 1812 X 5 Cr Ni Mo 1713	316 S 16 317 S 16	X 16 Cr Ni Si 2520 X 5 Cr Ni Mo 1713 X 5 Cr Ni Mo 1815	Z 12 CNS 25.20 Z 6 CND 17.12

Troubleshooting

10

This chapter describes the inspection and troubleshooting procedures for the **DM- 1318P**. Regular inspections and efficient maintenance are essential to ensure your machine gives you a long, trouble- free service life. The chapter is divided into two sections: the first being dedicated specifically to TROUBLESHOOTING BLADE AND CUTTING PROBLEMS, while the second TROUBLESHOOTING section concerns troubleshooting general machine operating faults. Taken together they form a comprehensive troubleshooting guide which will enable you to follow a methodical procedure for solving any problem.

Troubleshooting blade and cutting problems

PROBLEM	PROBABLE CAUSE	SOLUTION
Blade scored or scratched 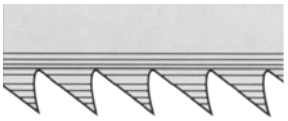	➧ Widia inserts chipped or worn	☞Replace
	➧ Widia inserts loose or tight	☞Adjust
	➧ Widia inserts dirty	☞Clean and re- adjust correctly
Cutting surfaces scored 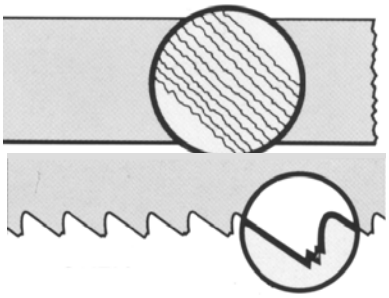	➧ Blade teeth worn	☞Replace blade
	➧ Head downstroke speed too fast	☞Reduce downstroke speed
	➧ Cutting speed too slow	☞Increase cutting speed
	➧ Blade teeth too wide	☞Change for wider teeth
	➧ Free blade guide head too far away	☞Move blade guide head closer so as to leave only that part of the blade free which is needed to effect the cut
	➧ Blade tension low	☞Reset tension to rated tension
	➧ Broken teeth on blade	☞Check and replace blade

PROBLEM	PROBABLE CAUSE	SOLUTION
Rapid tooth wear	➧ Teeth pointing in the wrong direction	☞Set teeth in correct direction
	➧ Blade worn in wrongly	☞With a new blade cutting should be done at half- speed and with downstroke speed also at half normal speed. After the blade has been worn in (about 300 cm^2 of work for hard cutting materials and about 1000 cm^2 for soft cutting materials) the cutting and downstroke speeds can be brought up to rated levels
	➧ Material too hard	☞Check cutting speed, downstroke speed and blade pressure, as well as type of band saw being used
	➧ Material defective	☞Surface defects: oxides, sand, surface hardening. Hardened inclusions in section. Reduce cutting and downstroke speeds or clean surface.
	➧ Cutting speed too high	☞The teeth slide on the material without cutting: reduce cutting speed
	➧ Head downstroke speed too slow	☞The band saw runs over the material without removing it: increase downstroke speed
	➧ Insufficient coolant	☞Check coolant level and clean pipes and jets
	➧ Incorrect fluid concentration	☞Check and use the correct concentration
	➧ New blade inserted into a partially- made cut	☞The cutting surface might have been subject to a localised heat- induced alteration, making it harder: recommence cut using a slower cutting and downstroke speed. There may be a broken tooth from the old blade lodged in the cut: check and remove before recommencing work
	➧ Flutter	☞Blade tension too low: tighten. Tooth shape or pitch unacceptable: change type of blade used. Widia blade steady buttons too far from the blade back: adjust guide heads, rotating them slightly to bring them closer to the blade back.

PROBLEM	PROBABLE CAUSE	SOLUTION
Cuts not orthogonal or inclined 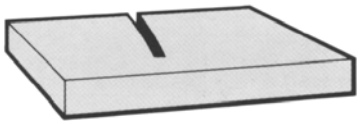	➧ Head downstroke speed too fast	☞Reduce head downstroke speed
	➧ Widia inserts worn	☞Replace
	➧ Inserts loose	☞Adjust width
	➧ Blade guide head positioned wrongly	☞Move mobile head up to the workpiece using the guide plate to leave free only that part of the blade actually needed to make the cut
	➧ Orthogonality of blade to workpiece rest shoulder	☞Check and realign the blade guide heads, then reset the blade orthogonality with the shoulder using the adjustment pin at 0°; then set the stops at 45° right and left by means of the appropriate screws
	➧ Perpendicularity of the blade to the work surface	☞Check and realign the blade guide heads then adjust the blade using the appropriate screws so that it is perpendicular to the work surface
	➧ Blade tension incorrect	☞Bring pressure up to 60 Bar
	➧ Blade worn	☞Replace blade
	➧ Tooth pitch unsuitable	☞Probably a blade with too many teeth per inch is being used; change for a coarser blade
	➧ Cutting speed too slow	☞Increase the cutting speed
	➧ Wrong coolant	☞Check the water and oil emulsion; check that none of the holes or hoses are blocked; direct the jets correctly
	➧ Broken teeth	☞Check the hardness of the material being cut

Broken teeth 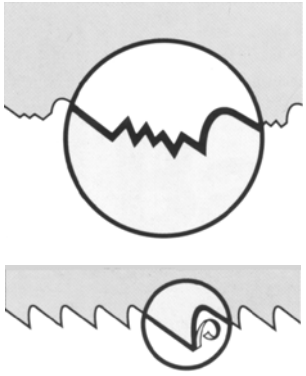	➧ Cutting speed too high	☞Reduce cutting speed
	➧ Downstroke speed too high	☞Reduce downstroke speed

PROBLEM	PROBABLE CAUSE	SOLUTION
Broken teeth 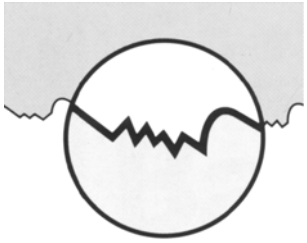 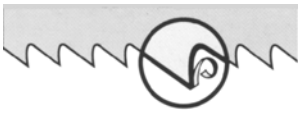	➧ Cutting pressure too high	☞Check and set to correct pressure
	➧ Tooth pitch unsuitable	☞Teeth too close together: change blade for one with a coarser tooth pitch
	➧ Swarf welded to teeth and gullets	☞Check blade- cleaning coolant jets. Check the blade- cleaning brush. If the swarf is not removed from the blade it will be drawn back into the cut and weld to the teeth, causing tooth breakage
	➧ Swarf welded to teeth and gullets	☞Check blade- cleaning fluid jets. Check blade- cleaning brush. If the swarf is not removed from the blade it will be drawn back into the cut and weld to the teeth, causing the teeth to break.
	➧ Material defects	☞The material may have altered surface areas, such as oxides or sand, or subcooled inclusions in the section. These areas are much harder than the blade and will cause the teeth to break: scrap or clean these materials.
	➧ Workpiece not clamped	☞The blade may break if the workpiece moves during cutting: check the vice, jaws and clamping pressure
	➧ The blade stops in the cut	☞Cutting pressure too high: check and restore to rated pressure. Downstroke speed too fast: reduce speed. Cutting speed too slow: increase. The blade slips on the flywheels: either the wheels are worn and need to be replaced or the blade tension is incorrect (too low) and must be re- adjusted.
	➧ New blade inserted in a partially made cut	☞The cutting surface may have been subjected to a localised heat- induced alteration, making it harder: recommence cut using a slower cutting and downstroke speed. A tooth from the old blade may be left in the cut: check and remove before restarting work.

PROBLEM	PROBABLE CAUSE	SOLUTION
Broken teeth 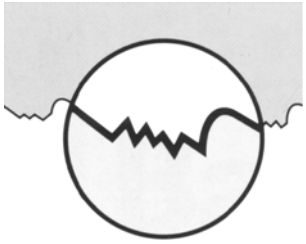 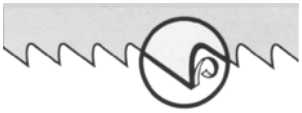	➧ Widia inserts positioned incorrectly	☞Adjust the position of the inserts, especially the width, since blade thicknesses can exceed the manufacturer's declared tolerance ratings
	➧ Widia blade steady buttons	☞Two widia blade steady buttons are located in the top of the blade guide heads which press on the back of the blade to transmit cutting pressure. If these buttons are too far from the blade, the blade may be prone to an up and down undulating action or abnormal vibrations, liable to cause the teeth to break: adjust the position of the heads by rotating them downwards so as to bring the blade steady buttons up against the back of the blade
	➧ Sections with large thickness variations	☞The cutting speed and downstroke speed must be chosen to suit the most critical part of the cut
	➧ Teeth angled in the wrong direction	☞Fit blade so that teeth point in the right direction
	➧ Blade run in wrongly	☞When using a new blade, the cutting and downstroke speeds must be reduced to half the normal operating speed. After the blade has been worn in (about 300 cm2 for hard materials and about 1000 cm2 for soft materials) the cutting and downstroke speeds may be returned to their rated levels
	➧ Insufficient coolant	☞Check coolant level and clean fluid lines and jets
	➧ Incorrect fluid concentration	☞Check and use the correct concentration
	➧ Blade tension too high or too low	☞Check and reset to rated tension

PROBLEM	PROBABLE CAUSE	SOLUTION
Blade path fault 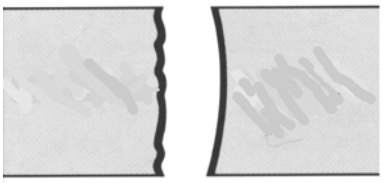	➧ Front flywheel position incorrect	☞Check that the band saw is correctly positioned on the flywheel. Adjust the position of the flywheel under the blade, moving the shaft of the flywheel
	➧ Flywheels worn	☞Replace
	➧ Gaps full of swarf	☞Clean inside machine using blown air.
	➧ Blade guide head alignment	☞Check and adjust
Blade broken 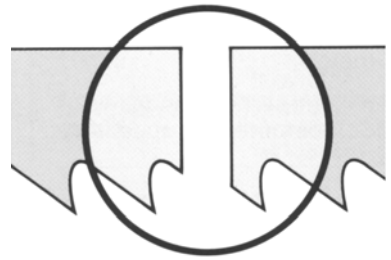 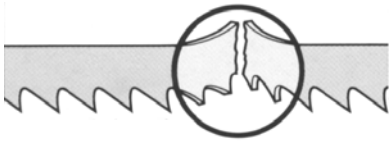	➧ Cutting speed too high	☞Reduce cutting speed
	➧ Head downstroke too fast	☞Reduce head downstroke speed
	➧ Cutting pressure too high	☞Check and set to correct pressure
	➧ Tooth pitch unsuitable	☞Teeth too close together: change the blade for one with coarser tooth spacings
	➧ Workpiece not clamped properly	☞The blade may break if the workpiece moves during cutting: check the vice, jaws and clamping pressure.
	➧ Widia inserts positioned incorrectly	☞Adjust inserts position, especially the width, since blade thickness can exceed the manufacturer's declared tolerance ratings
	➧ Widia blade steady buttons	☞Can have a milling action on the back of the blade if worn or chipped, causing cracks from the back towards the teeth.
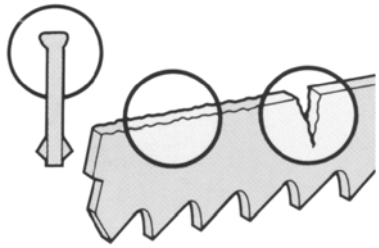	➧ Position of blade on flywheels incorrect	☞The blade may be scraping on the edges of the flywheels: this problem is generally caused by blades which are deformed or wrongly welded (conical) Adjust the position of the front flywheel by moving the pin, or change the blade
	➧ Blade tension incorrect	☞If the blade tension is too high or too low, the blade will be subjected to abnormal stress: set the tension back to the rated value.
	➧ Blade weld fault	☞The point at which a blade is welded is its most critical point; problems could be caused by welds which are not aligned perfectly or have inclusions or blowholes

PROBLEM	PROBABLE CAUSE	SOLUTION
	➧ Free blade guide head	☞The head is too far away from the workpiece: move the head closer, leaving free only that part of the blade actually needed to make the cut
	➧ Teeth in contact with the material before starting the cut	☞Always check the position of the blade before starting a new job, especially for the semi- automatic cycle
	➧ Widia inserts	☞If worn, the inserts can score the blade, weakening it even to breaking point. If the inserts are too far apart, the blade will whip, striking both the inserts and the material. Replace or adjust
	➧ Insufficient coolant	☞Check coolant fluid level; clean pipes and jets
	➧ Incorrect fluid concentration	☞Check and use the correct concentration
	➧ The blade stops in the cut	☞Cutting pressure too high: check pressure and reset to rated pressure. Head downstroke speed too fast: reduce. Head downstroke speed too slow: increase. The blade slips on the flywheels: incorrect or low blade tension; readjust or increase.

Troubleshooting

This section deals with the problems which may occur during machine operation. The MEP 30 controller allows you to test all the machine's electric and electronic devices by checking the status of the input and output signals on the IUD/IUV card (see Chapter 6).

The board IUD/IUV is inside the electric board.

Displaying the diagnostics menu

▶ Power the machine rotating the main switch on the left side of the control

board;

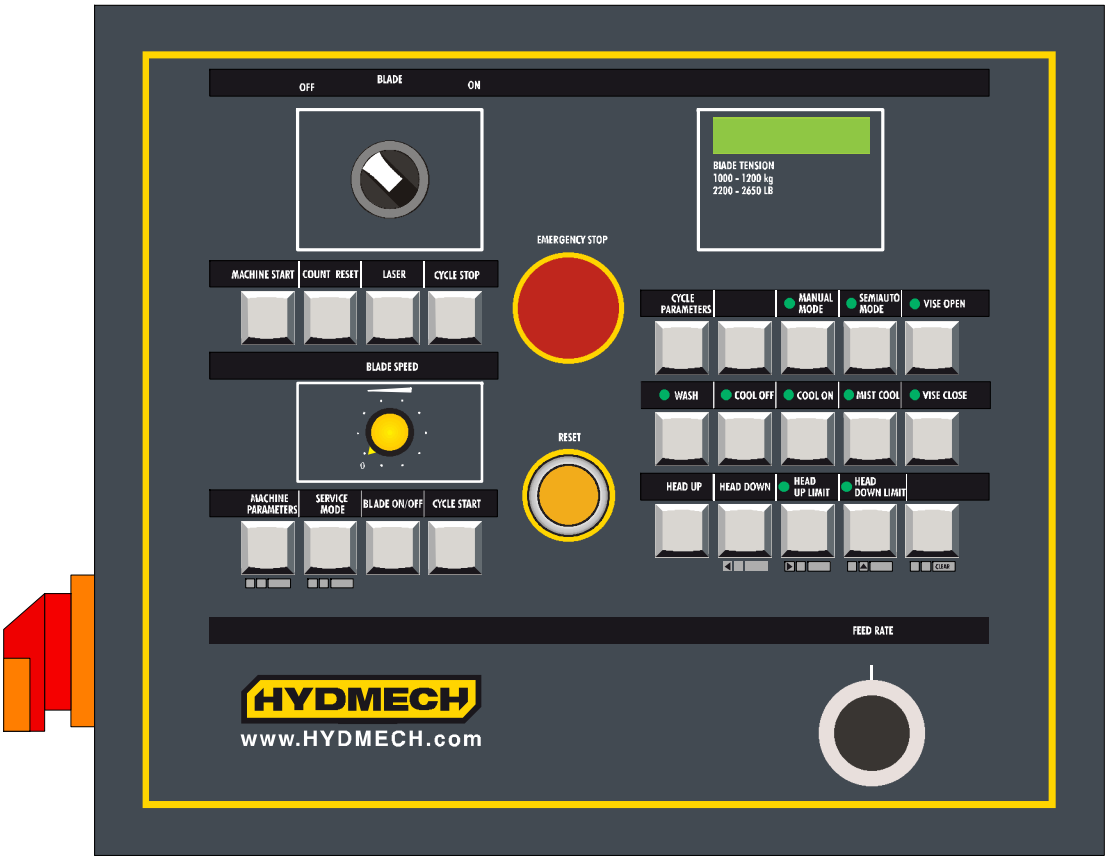

▶ press simultaneously and in sequence the keys SERVICE MODE and MACHINE START;

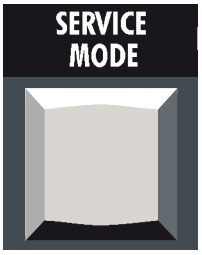

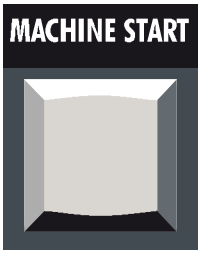

Diagnostics system

Once you have opened the diagnostics menu, a set of characters, each corresponding to an OUTPUT signal on the MEP 30 controller, is displayed. For further information about the machine's outputs, refer to the electrical and electronic diagrams illustrated in Chapter 6 of this manual.

Testing the control console keyboard

Each console key has an identification number which is displayed on the diagnostics screen after the letter "K", when the key is pressed. For example, when pressing the key for the manual cycle (HAND key), the figure 12 is displayed next to the letter "K":

if the figure K does not change pressing the key HAND, the probable malfunctioning is due to the console key that does not deliver power when closed.

List of IUD-IUV card INPUTS

▶ the digits 0 and 1 shown in the display lower line indicate the status OFF (0) or ON (1) of each single input;

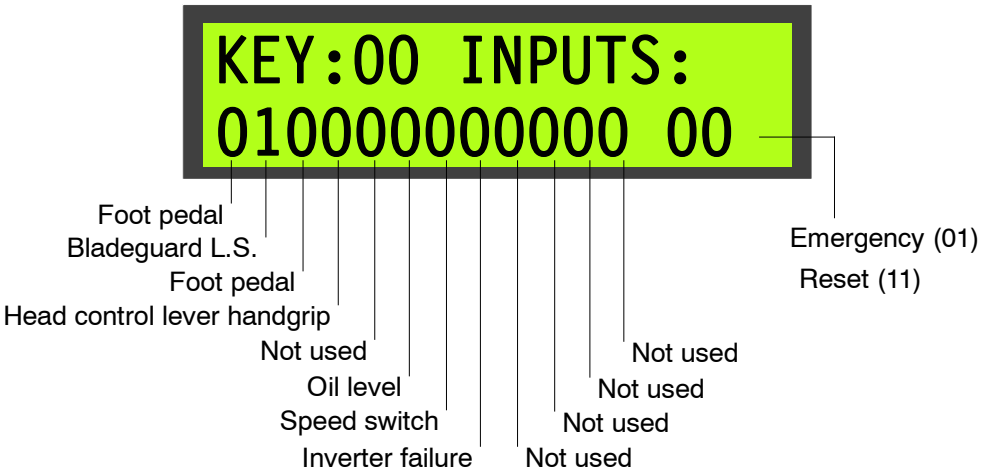

▶ Starting from the video page of the digital inputs, press the key "arrow up" once to display the list of the analogic inputs of the board IUD/IUV:

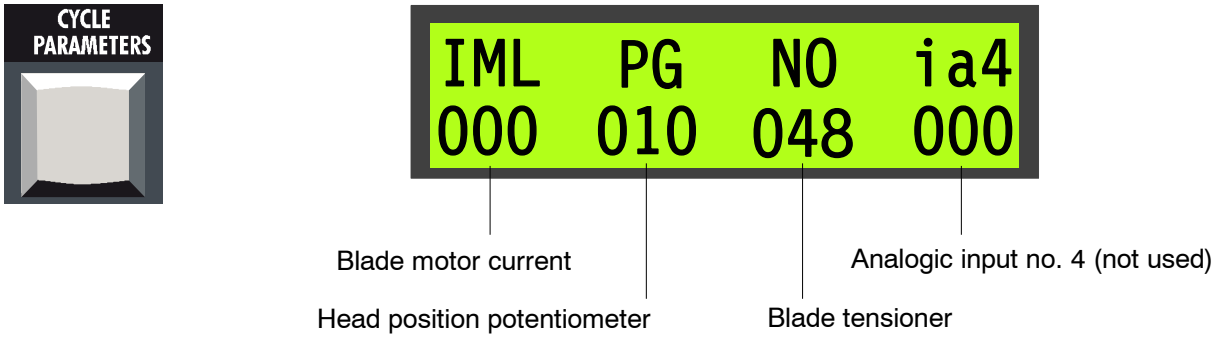

List of IUD-IUV card OUTPUTS

▶ Starting from the video page of the digital inputs, press the key "arrow up" once to display the list of the outputs of the board IUD/IUV:

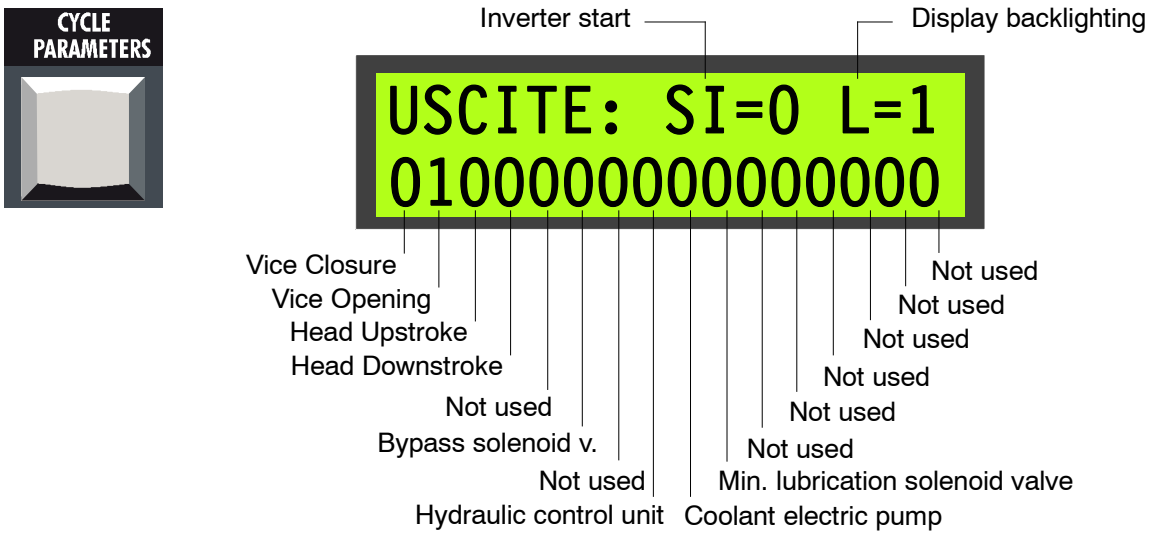

▶ the digits 0 and 1 shown in the display lower line indicate the status OFF (0) or ON (1) of each single output. Pressing the ▶ or ◀ key it is possible to move the cursor till selecting the output to be checked. Pressing the ▲ key it is activated or deactivated.

IML PT TL ia4 000 010 048 000 Current transformer	**AMMETER TRANSFORMER FOR CHECKING BLADE MOTOR ABSORPTION** If the display of blade motor absorption doesn't visualise the current values any longer, it's possible to check if the fault is relative to "AMMETER TRANSFORMER", to visualisation, to wiring, or to input of IUV board.
IML PT TL ia4 000 010 048 000 Head position potentiometer	**POTENTIOMETER OF HEAD CYLINDER TRANSDUCER (CUTTING HEAD POSITION)** If, by moving the head upwards or downwards, the value visualised doesn't change, you can check if the problem is due to the transducer potentiometer, to connections or to problems of the IUV. Move the head manually and check that the value changes on the display.
IML PT TL ia4 000 010 048 000 Blade tensioner	**PRESSURE SWITCH FOR SURVEYING PRESENCE OF COMPRESSED AIR** To reduce dangerous situations, if there's absence of air, a pressure switch inhibits all machine functions, safeguarding safety of operator from residual risks. If the visualised vale is 0 (OFF), it means that there's no pressure or that compressed air is disconnected.
IML PT TL ia4 000 010 048 000 ANALOGIC INPUT NO. 4	ANALOGIC INPUT NO. 4 Available for connecting optional instruments.

Machine alarms and emergencies

The machine's MEP 30 controller notifies the operator of any alarm or emergency condition which may occur during production by way of acoustic and visual signals. This section lists the messages shown on the display.

PRESS RESET	This message is displayed during the initialisation phase after pressing the ON key
PRESS RESET	This message is displayed when the cutting start position is lower than the previous position saved for the cutting end position. ▶Save both the FCTI and FCTA positions again.
HEAD NOT AT FCTI PRESS RESET	This message is displayed if the head is not positioned at the FCTI position when the cycle is STARTED. ▶Return the head to the FCTI position before resuming the cycle
SELECT SPEED PRESS RESEt	This message is displayed if the cycle is STARTED without having first selected the cutting speed. ▶Return the head to the FCTI position before resuming the cycle

STOP BUTTON PRESSED PRESS RESET	This message is displayed if an operation is activated before releasing the MUSHROOM HEAD EMERGENCY STOP button. ▶Release the EMERGENCY STOP button and press RESET.
EMERGENCY BLADE GUARD OPEN	This message is displayed if the blade guard is opened, for example, to change the blade. ▶Make sure the blade guard is closed. ▶Check the safety limit switch. ▶Check the connections.
EMERGENCY INVERTER FAILURE	This message is displayed if the machine is equipped with an INVERTER (optional). Press RESET to test the manual commands. ▶Check the inverter contactor. ▶Check the power supply voltage. ▶Check the power phases and supply voltage of the blade motor. ▶Check the connections.
EMERGENCY BLADE STOPPED	Displayed when the blade is jammed while cutting: ▶Press RESET
EMERGENCY AIR PRESSURE	It is displayed when the air pressure from the network fails. ▶Press RESET
EMERGENCY BLADE MOT I OVERC.	It is displayed when there is an overcurrent at the blade motor ▶Press RESET
EMERGENCY BLADE TENSION	This message indicates a mechanical or electric/electronic fault affecting the blade tensioning unit. ▶Check the blade tension. ▶Check the operation of the tensioning slide. ▶Make sure the blade is correctly positioned on the flywheels. ▶Check the STRAIN GAUGE input on the IUV card. ▶Check the condition of the blade. ▶Check the connections.
EMERGENCY ERROR CODE: 01	RESETS OR INTERRUPTS NOT JUSTIFIABLE
EMERGENCY ERROR CODE: 02	EEPROM NOT AVAILABLE
EMERGENCY ERROR CODE: 03	RAM TEST FAILED

EMERGENCY ERROR CODE: 04	ROM TEST FAILED
EMERGENCY ERROR CODE: 05	STATUS OR TEMPLATE NON- EXISTENT
EMERGENCY ERROR CODE: 06	CUTTING CYCLE PHASE NON- EXISTENT
EMERGENCY ERROR CODE: 07	EMERGENCY NOT DEFINED
EMERGENCY ERROR CODE: 07	SERIAL 485 FAILURE
EMERGENCY ERROR CODE: 07	SERIAL 422 FAILURE
EMERGENCY ERROR CODE: 08	UNSTABLE DIGITAL INPUTS
EMERGENCY ERROR CODE: 09	UNSTABLE BLADE (ch0) MOT ABSORB ANAL. INPUT
EMERGENCY ERROR CODE: 10	UNSTABLE HEAD (ch1) POSIT. P. ANAL. INPUT
EMERGENCY ERROR CODE: 15	POWER FAILURE

Accessory Installation

11

In this chapter are listed the accessories that may be fitted by the user to this model of machine, along with the relative assembly instructions.

Accessories that can be fitted by the user

Blade

The blades that can be used on this machine include:

- 4500 x 27 x 0,9 bimetal blade for solid and section materials;

Can of emulsible oil

5 l can of emulsible oil.

Bar support

This device is used to increase the load- bearing strength of the roller table, both during feeding and discharge. The steps which should be followed to assemble it are illustrated below.

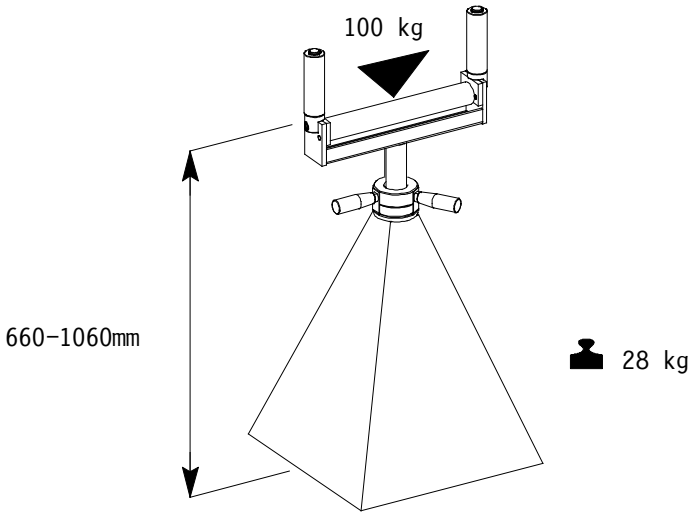

Roller table

- K210 roller table module for feed side, 1500 mm;

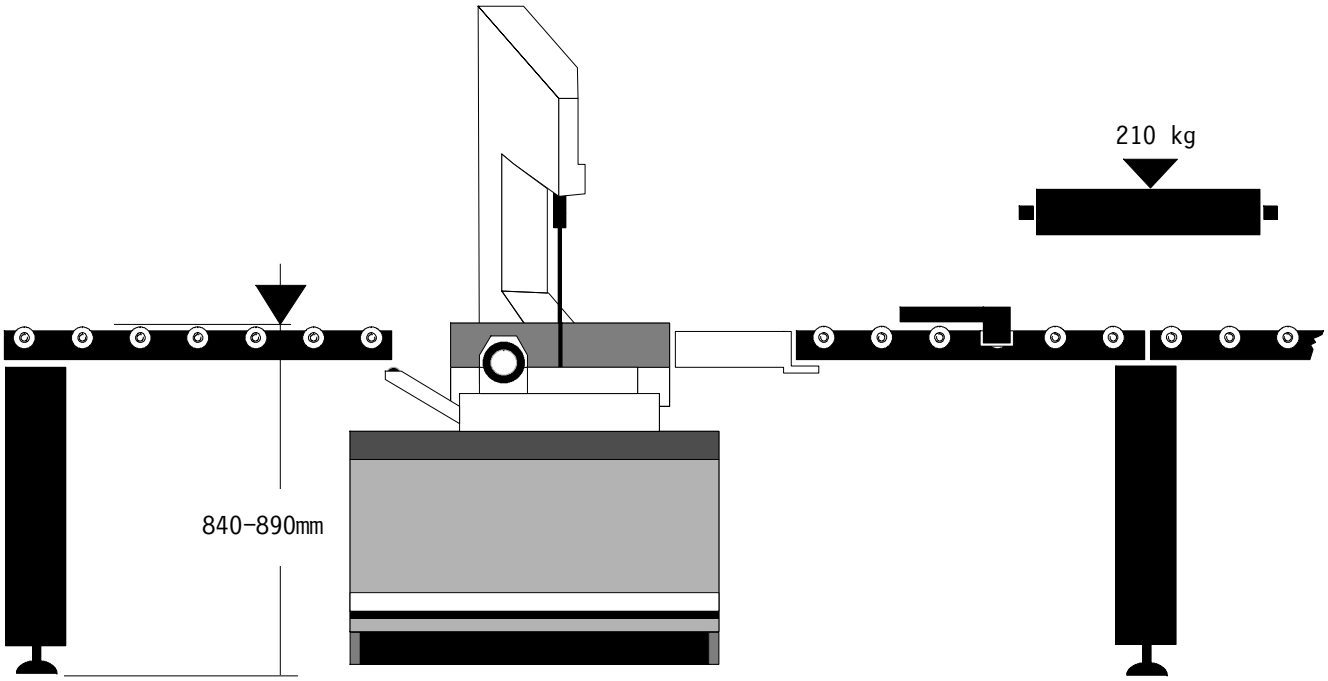

- K210 roller table for discharge side, 1500÷6000 mm;
- measuring stroke R1/R2/R3 1500-6000 mm;
- pair of vertical rollers.

Can of emulsible oil

5 l can of emulsible oil.

Roller plane adapter, loading side

The installation operations are given below:

▶ install the adapter on the machine loading side (namely the left side, standing before the sawing machine), fastening it with the three screws supplied with the machine fixed platform.

▶ fasten the support leg to the adapter end, using two of the four holes in the support upper part, leaving the other two available for engaging the roller device.

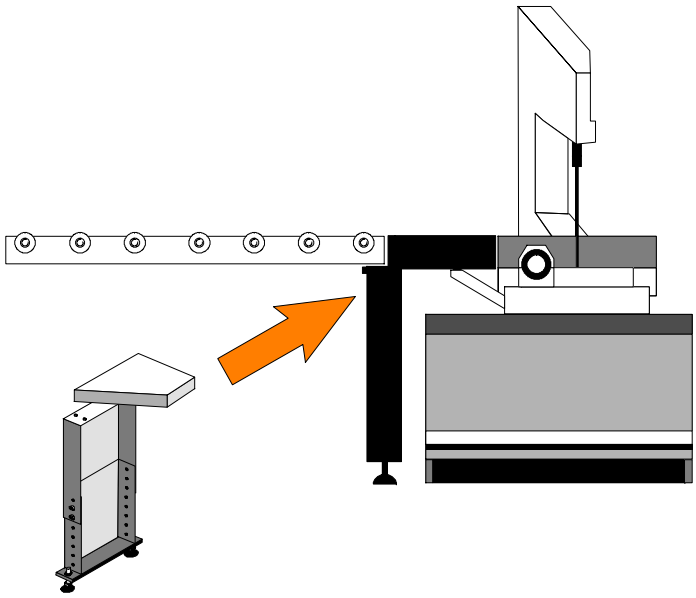

▶ Attach the outfeed rolling deck by fixing it with the screws supplied.

Roller plane adapter, unloading side

The installation operations are given below:

- ▶ install the adapter on the machine unloading side (namely the right side, standing before the sawing machine) fastening it with the three screws supplied with the machine fixed platform.
- ▶ fasten the support leg to the adapter end, using two of the four holes in the support upper part, leaving the other two available for engaging the roller device.

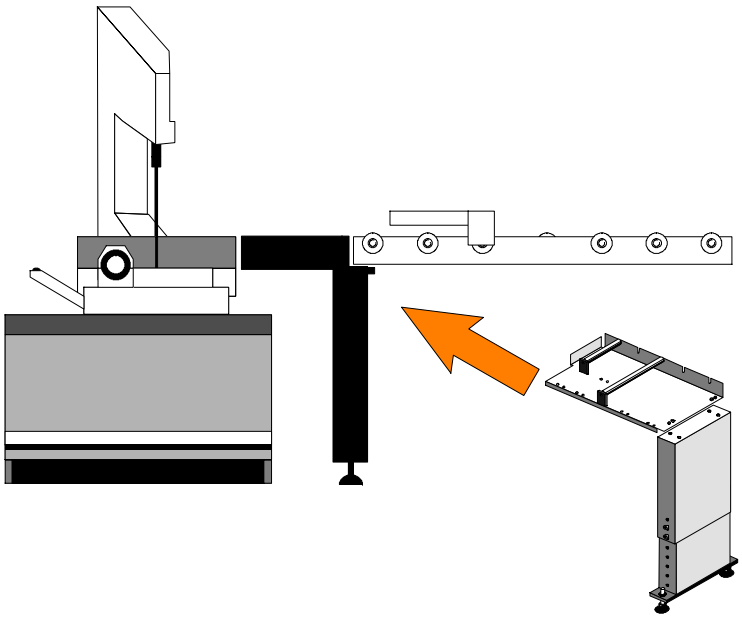

- ▶ Attach the outfeed rolling deck by fixing it with the screws supplied.

Minimal lubrication system

This device was designed to improve lubrication of the tool during cutting.

- ▶ An instruction book is supplied with the kit to explain how to install this optional unit.

Additional pedal control with emergency device

It is possible to select the start mode on the machine with foot pedal. The machine can be activated from the control panel (START) or foot pedal.

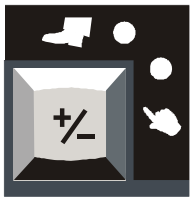

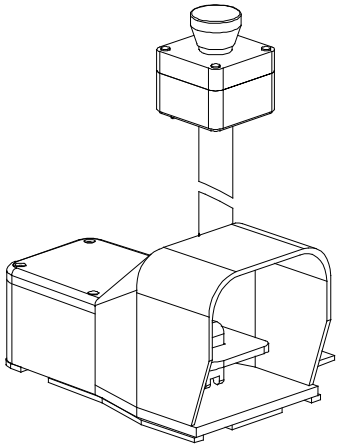

▶ Drill a hole on the base to let the cables pass.

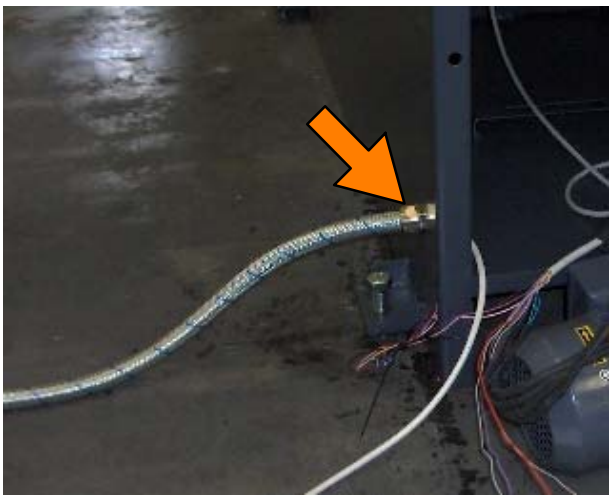

▶ The cables to be connected to the pedal control are inside the sheath of the control unit cable.

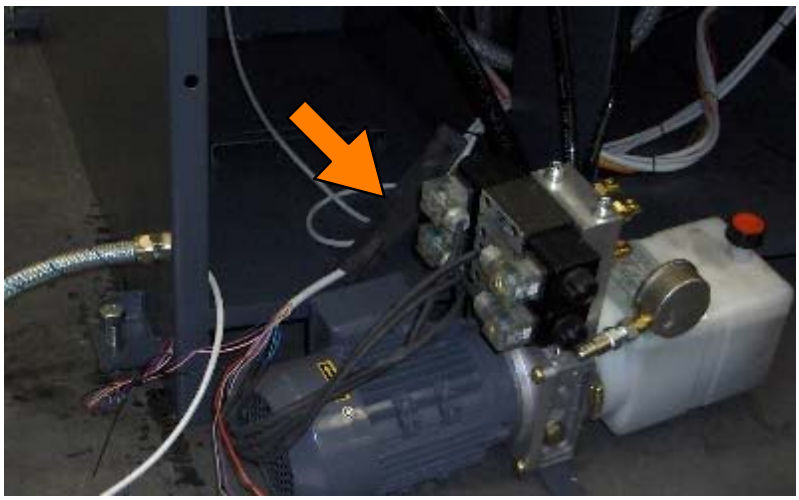

▶ Cables to be connected to the control pedal:
- the pedal cable is 2x0.50 mm2.
- Connect the blue and brown wires of the cable 2x0.50 mm2 of the pedal control with the cables numbered 052 (red) and 033 (grey/pink) on the sawing machine.

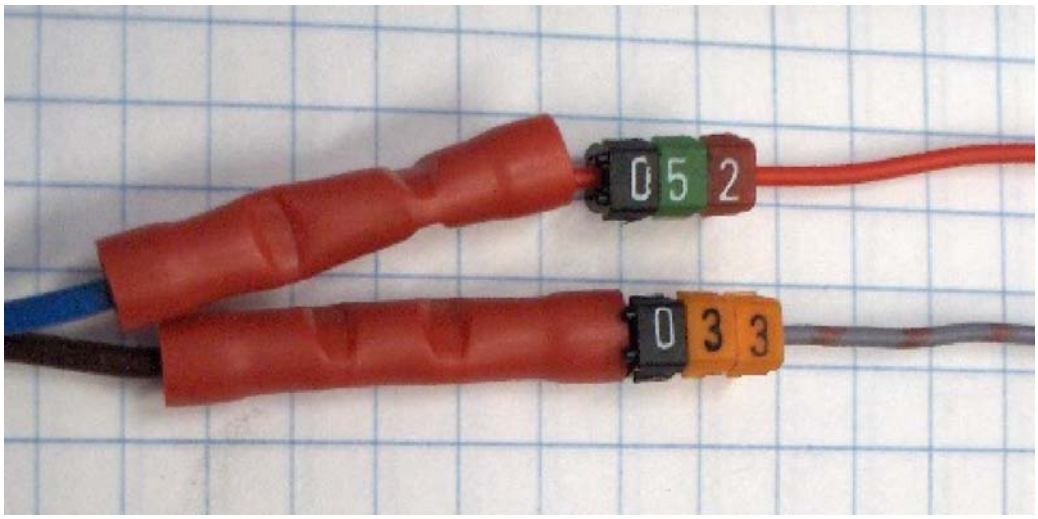

▶ Cables to be connected with the pedal emergency contact.
- The emergency mushroom cable is 4x0.50 mm2.
- Connect the yellow and green wires of the cable 4x0.50 mm2 of the emergency mushroom with the cables numbered 0361 (purple) and 361 (grey) on the sawing machine.

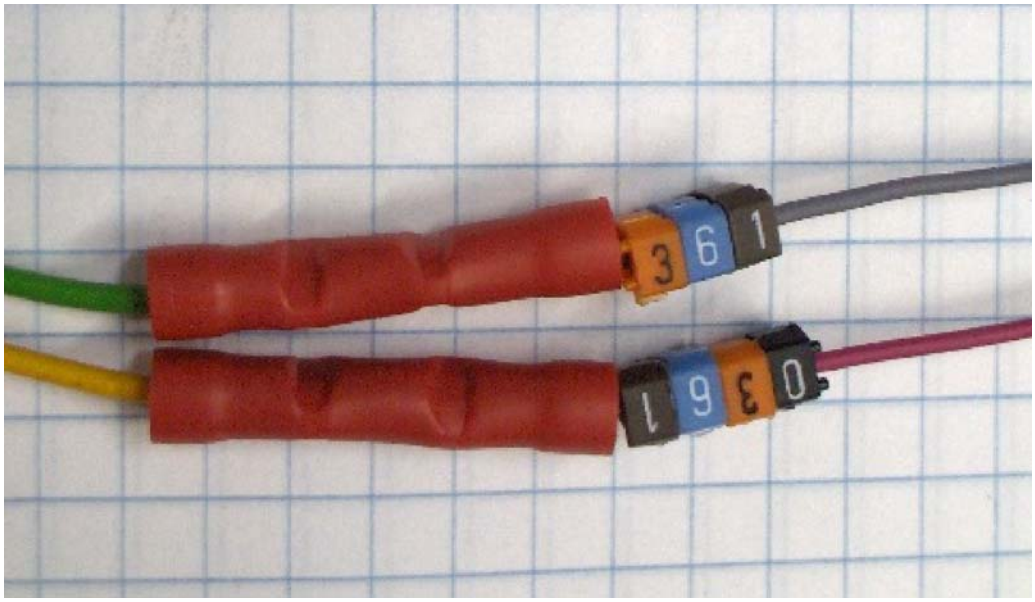

▶ Open the cover, take the wire no. 052 and lead it inside the electric cabinet.

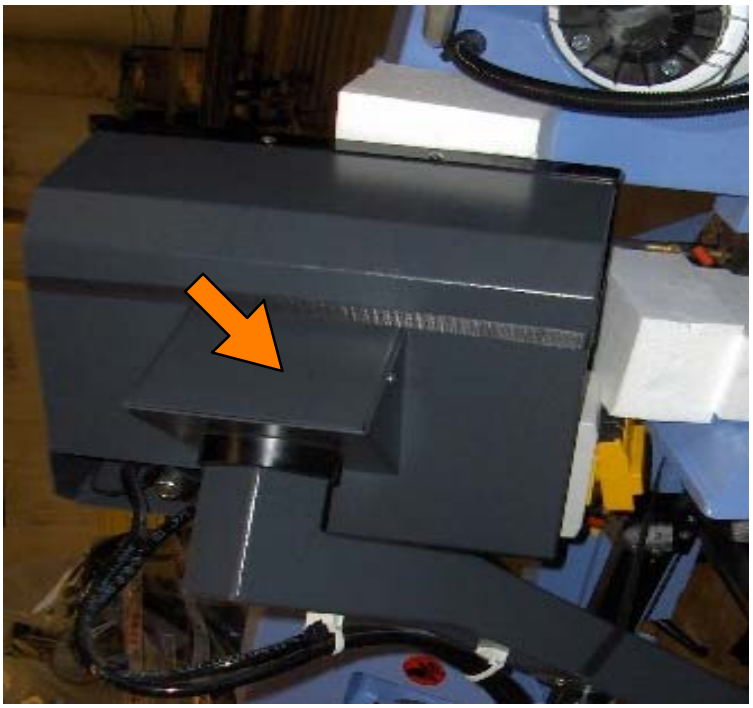

▶ Connect the wire no. 052 to the terminal B (where other wires with the same number are present already).

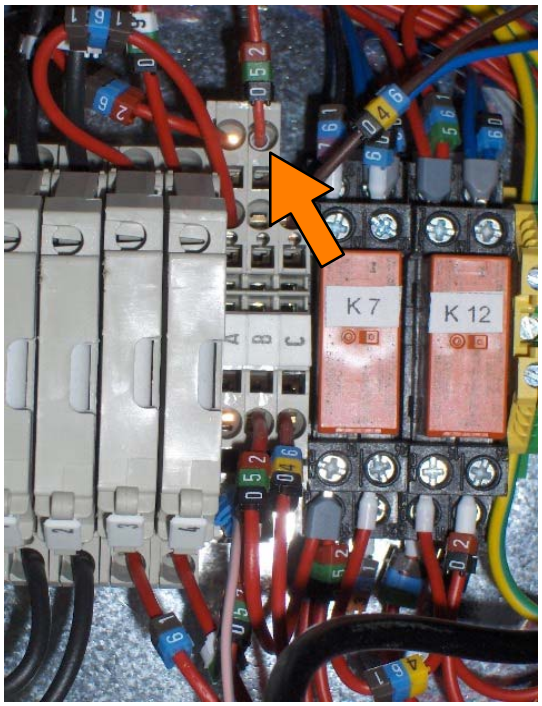

Warranty

Hydmech Group warrants each new sawing machine to be free from failure resulting from defective material and workmanship under proper use and service for a period of two years following the date of shipment to the user. Hydmech's sole obligation under this warranty is limited to the repair or replacement without charge, at Hydmech's factory, warehouse, or approved repair shop, of any part or parts which Hydmech's inspection shall disclose to be defective. Return freight must be prepaid by the user.

This warranty, in its entirety, does not cover maintenance items, including but not limited to lubricating grease and oils, filters, V- belts, saw blades, etc, nor any items herein which show sign of neglect, overloading, abuse, accident, inadequate maintenance or unauthorized altering.

Liability or obligation on the part of Hydmech for damages, whether general, special or for negligence and expressly including any incidental and consequential damages is hereby disclaimed. Hydmech's obligation to repair or replace shall be the limit of its liability under this warranty and the sole and exclusive right and remedy of the user.

THIS WARRANTY IS EXPRESSLY IN LIEU OF ALL OTHER WARRANTIES, EXPRESSED OR IMPLIED, WRITTEN OR ORAL, INCLUDING WITHOUT LIMITATION ANY IMPLIED WARRANTIES OF MERCHANTABILITY OR FITNESS FOR A PARTICULAR PURPOSE.

This warranty may be not changed, altered, or modified in any way except in writing by Hydmech Group.

HYDMECH GROUP LIMITED
1079 Parkinson Road
P.O. BOX 1659
Woodstock, Ontario
N4S 0A9

Sales Toll Free: 1- 877- 276- SAWS (7297)
Phone: (519) 537- 2103
Fax: (519) 539- 5126
Website: www.hydmech.com
e- mail: info@hydmech.com

The Rock Solid Solution

Through its twinned distribution channel of authorized dealers and factory rapresentatives, HYD-MECH services worldwide network of customers from its two state-of-the-art manufacturing facilities in Houston, Texas, USA and Woodstock, Ontario, Canada. Check out the full range of Rock Solid Sawing Solutions at www.hydmech.com

HYD-MECH GROUP LIMITED
1079 Parkinson Road, P.O. BOX 1030
Woodstock, Ontario, Canada N4S 8A4
Sales toll free: 1-877-276-SAWS (7297)
Telephone: (519) 539-6341
Fax: (519) 539-5126

Customer service toll free: 1-877-237-0914 - PARTS FAX:(519) 539-5099 - WEBSITE: www.hydmech.com - E-MAIL: info@hydmech.com